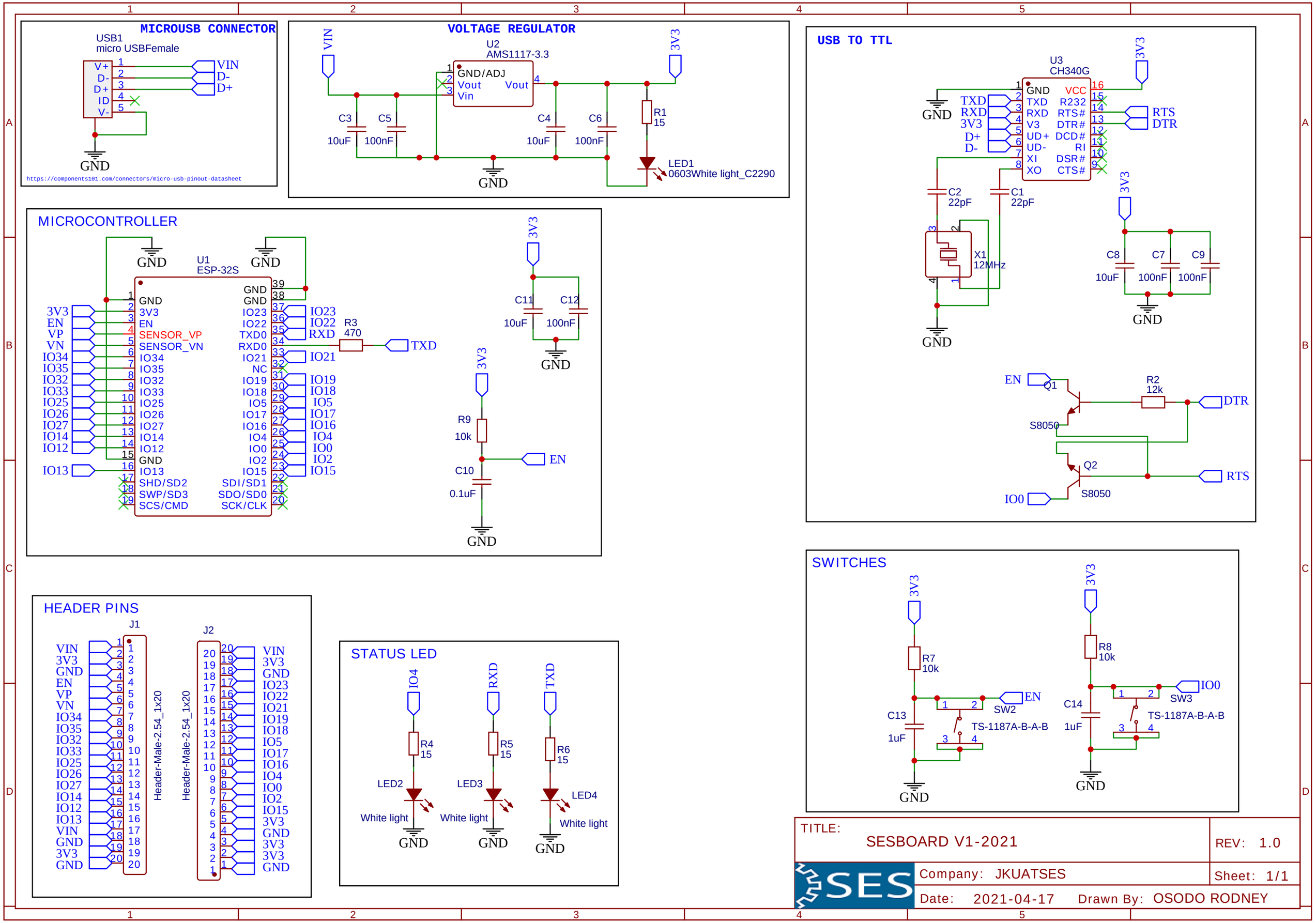


TITLE: SESBOARD V1-2021

REV: 1.0

Company: JKUATSES

Sheet: 1/1

Date: 2021-04-17

Drawn By: OSODO RODNEY