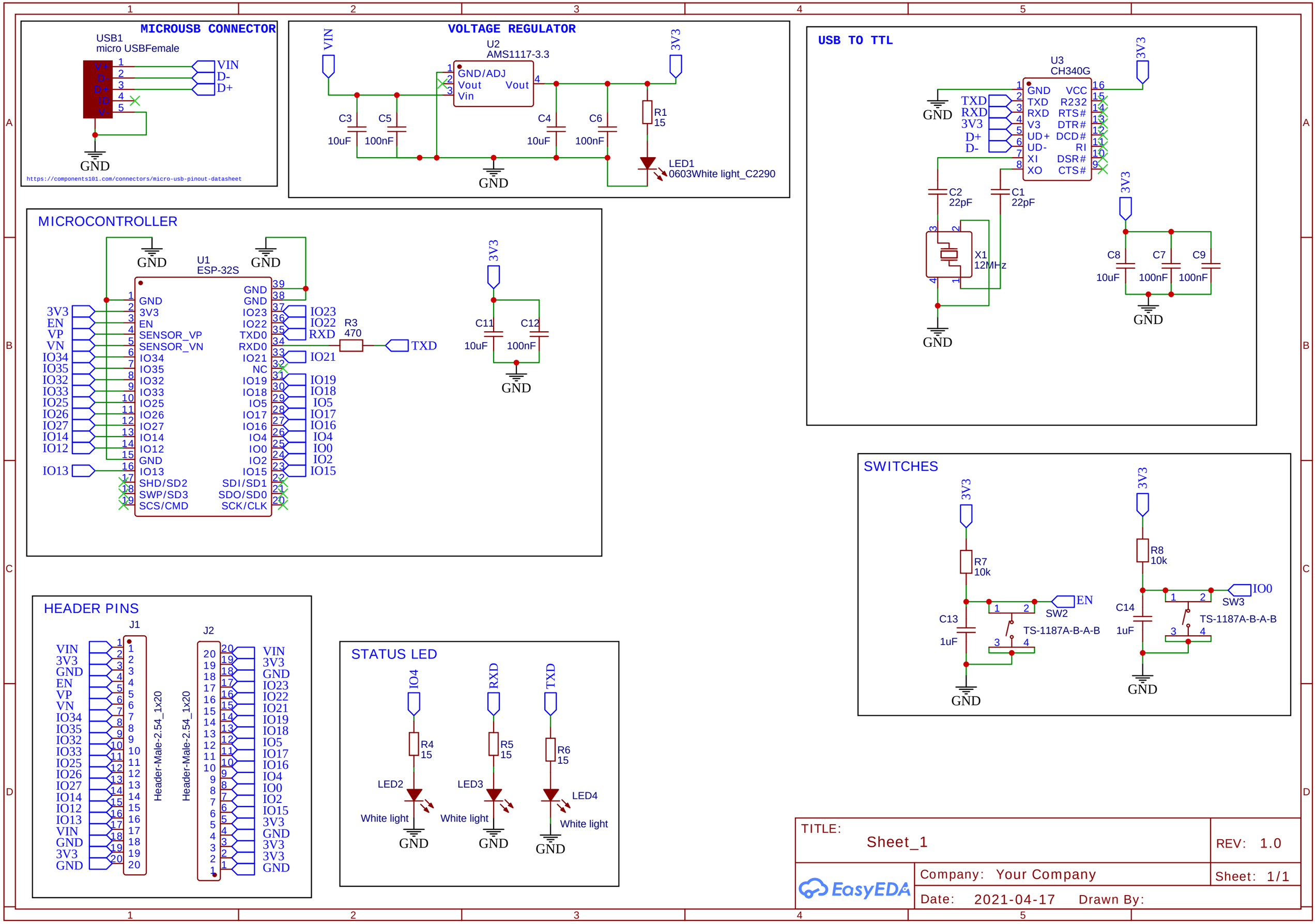
MICROUSB CONNECTOR
USB1
micro USBFemale
VIN
D-
D+
GND
https://components101.com/connectors/micro-usb-pinout-datasheet
VOLTAGE REGULATOR
U2
AMS1117-3.3
GND/ADJ
Vout
Vin
C3
10uF
C5
100nF
C4
10uF
C6
100nF
R1
15
LED1
0603White light_C2290
3V3
USB TO TTL
U3
CH340G
TXD
RXD
3V3
D+
D-
GND
VCC
R232
RTS#
DTR#
DCD#
RI
DSR#
CTS#
UD+
UD-
XI
XO
C2
22pF
C1
22pF
X1
12MHz
C8
10uF
C7
100nF
C9
100nF
MICROCONTROLLER
U1
ESP-32S
3V3
EN
VP
VN
IO34
IO35
IO32
IO33
IO25
IO26
IO27
IO14
IO12
IO13
SHD/SD2
SWP/SD3
SCS/CMD
SENSOR_VP
SENSOR_VN
IO23
IO22
TXD0
RXD0
IO21
NC
IO19
IO18
IO5
IO17
IO16
IO4
IO0
IO2
IO15
SDI/SD1
SDO/SD0
SCK/CLK
R3
470
TXD
RXD
C11
10uF
C12
100nF
SWITCHES
R7
10k
C13
1uF
EN
SW2
TS-1187A-B-A-B
R8
10k
C14
1uF
IO0
SW3
HEADER PINS
J1
J2
Header-Male-2.54_1x20
STATUS LED
IO4
R4
15
LED2
White light
R5
15
LED3
R6
15
LED4
TITLE:
Sheet_1
REV: 1.0
Company: Your Company
Sheet: 1/1
Date: 2021-04-17
Drawn By:
EasyEDA