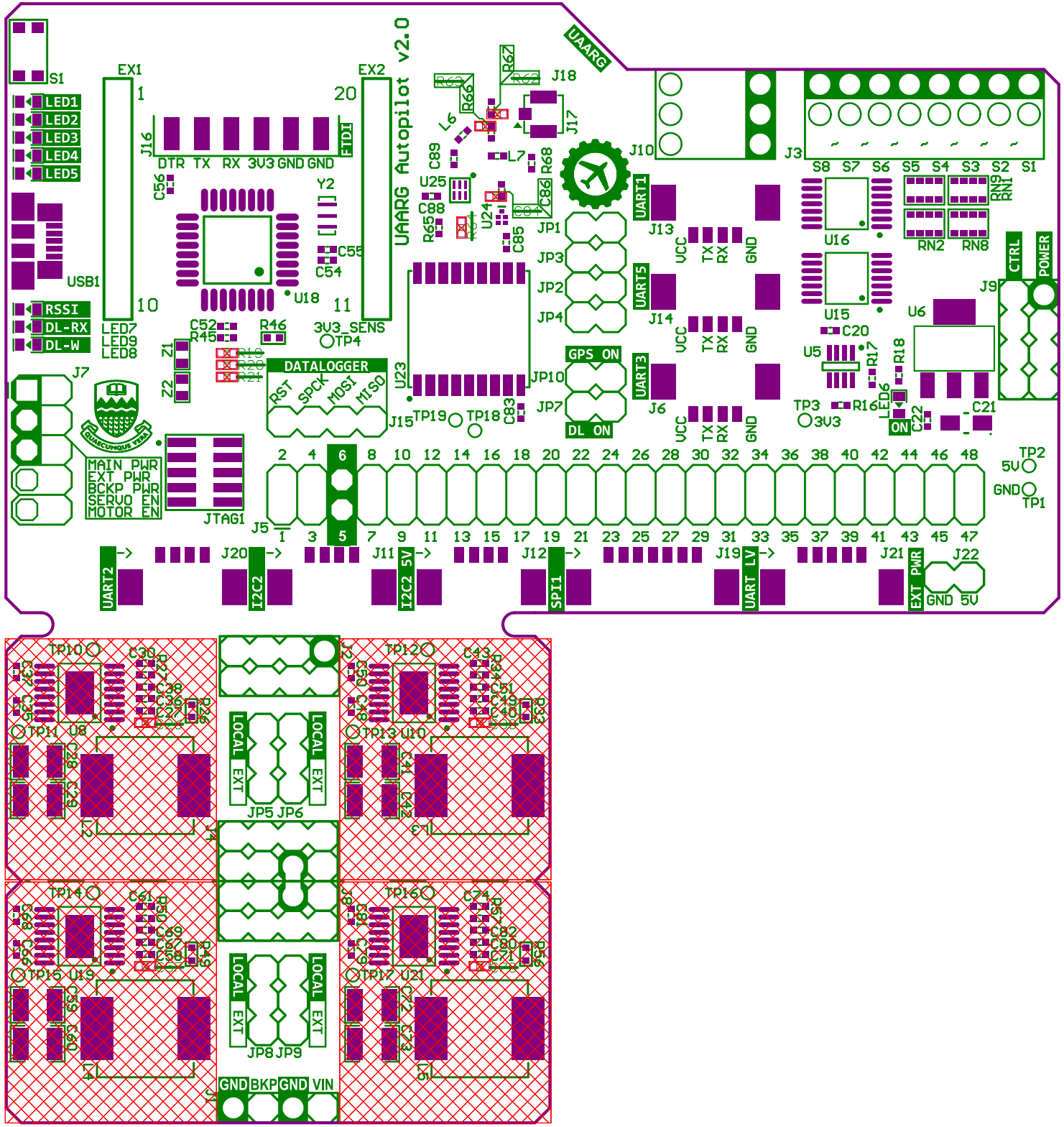
UAARG Autopilot v2.0
UAARG
S1
LED1
LED2
LED3
LED4
LED5
USB1
RSSI
DL-RX
DL-W
EX1
EX2
J16
DTR TX RX 3V3 GND GND
FTDI
Y2
U18
LED7
LED9
LED8
3V3_SENS
TP4
DATALOGGER
RST SPCK MOSI MISO
J15
J7
MAIN PWR
EXT PWR
BCKP PWR
SERVO EN
MOTOR EN
JTAG1
J5
J10
J3
S8 S7 S6 S5 S4 S3 S2 S1
RN9
RN1
RN2
RN8
U16
U15
U6
U5
C20
R17
R18
LED6
ON
C22
C21
TP3
3V3
R16
CTRL
POWER
J9
TP2
5V
GND
TP1
UART1
J13
UART5
J14
UART3
J6
VCC TX RX GND
GPS_ON
DL_ON
JP1
JP3
JP2
JP4
JP10
JP7
J18
J17
R67
R66
L6
L7
R68
C89
U25
C88
R65
U24
C86
C85
U23
TP19
TP18
C83
J20
J11
J12
J19
J21
J22
UART2
I2C2
I2C2 5V
SPI1
UART LV
EXT PWR
GND 5V
TP10
C30
TP11
U8
TP12
C43
TP13
U10
TP14
C61
TP15
U19
TP16
C74
TP17
U21
LOCAL
EXT
JP5 JP6
JP8 JP9
GND BKP GND VIN

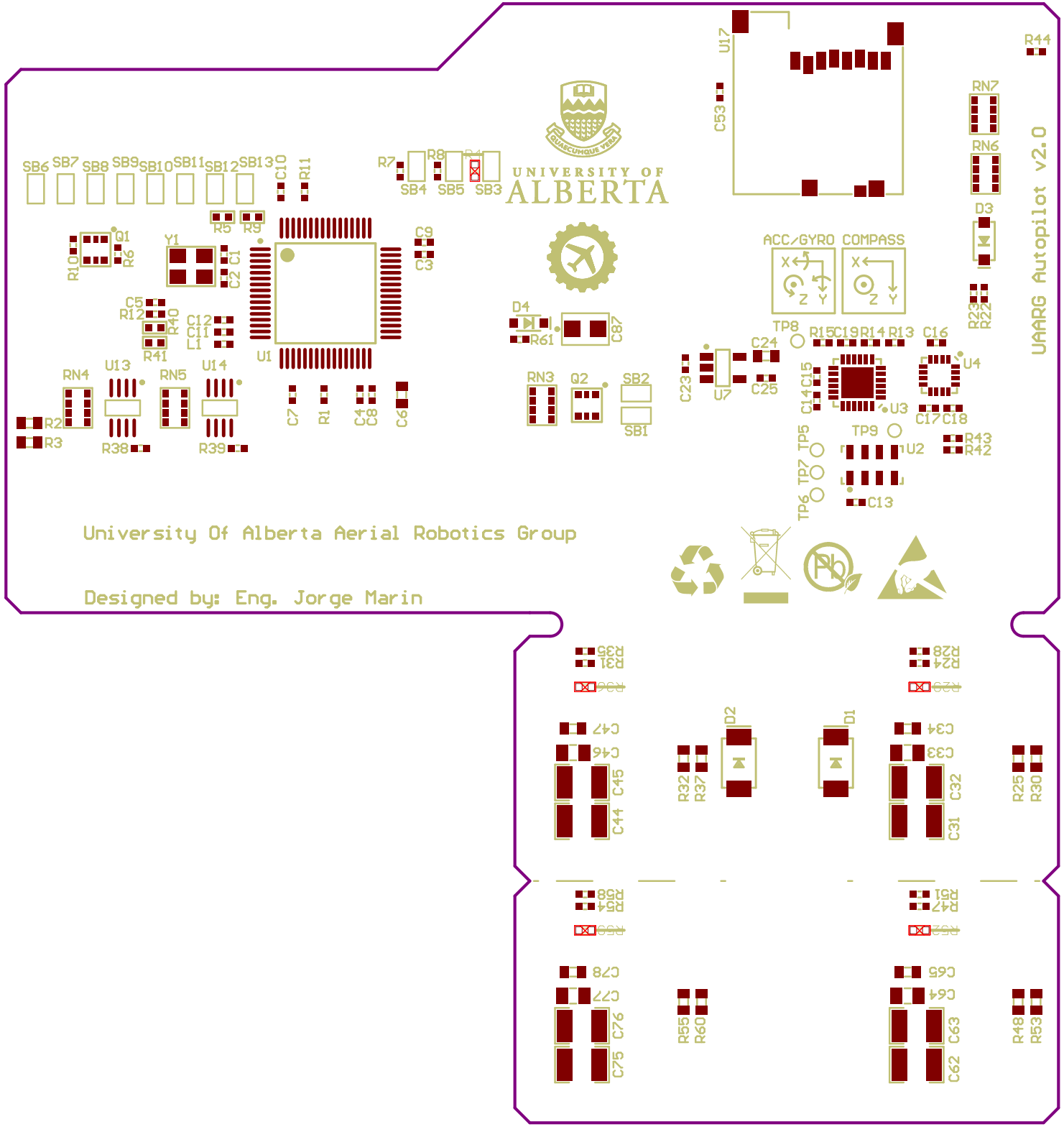
UAARG Autopilot v2.0
University Of Alberta Aerial Robotics Group
Designed by: Eng. Jorge Marin
UNIVERSITY OF ALBERTA
ACC/GYRO
COMPASS
SB6 SB7 SB8 SB9 SB10 SB11 SB12 SB13
R7 R8 R4
SB4 SB5 SB3
C10 R11
R5 R9
Q1 R6 R10
Y1
C1 C2
C9 C3
C5 R12 R40 R41
C12 C11 L1
U1
D4 R61 C87
RN4 U13 RN5 U14
R2 R3 R38 R39
C7 R1 C4 C8 C6
RN3 Q2 SB2 SB1
U17 C53
R44
RN7 RN6
D3 R23 R22
TP8 R15 C19 R14 R13 C16
C24 C23 U7 C25
C15 C14 U3
U4 C17 C18
TP5 TP7 TP6
TP9 U2 R43 R42
C13
R31 R35
R24 R28
C47 C46 C45 C44
R32 R37
D2 D1
C34 C33 C32 C31
R25 R30
R54 R58
R47 R51
C78 C77 C76 C75
R55 R60
C65 C64 C63 C62
R48 R53