Moai by Peopoly

Kit Installation Guide

Frames

Instruction starts next page.

You can use Video Tutorial Part3 to help

Please find these 3 bars

- They are labeled:
- “Left1”
- “Left2”
- “Left3”

Please get 4 screws from the bag labeled “BH M6x12”

- And screw two per bar **half way** on “Left1” and “Left3”
- Screw them in until there is 3 to 5mm remaining out
- This will make it easier to align with the slots in the frame in later steps.

Please find these 3 bars

- They are labeled:
- “Right1”
- “Right2”
- “Right3”

Please get 4 screws from the bag labeled “BH M6x12”

- And screw two per bar **<u>half way</u>** on “Right1” and “Right3”
- Screw them in until there is 3 to 5mm remaining out
- This will make it easier to align with the slots in the frame in later steps.

Please get 4 screws from the bag labeled “BH M6x20 “

- These are for Left2 and Right2 bars. 2 Each bar. Use it later
- Screw them in until there is 3 to 5mm remaining out
- This will make it easier to align with the slots in the frame in later steps.

Please find assembled front and back frame labled Front and Back

- The front frame has labels start with Front
- The back frame has labels start with Back
- The side of each frame that is facing outward is where the sticker is located

Put Front and Back Frame in parallel on the table

- Put Front on the left hand side, sticker facing left. Rubber feet facing you
- Put Back Frame on the right. Sticker facing right. Rubber feet Facing you.
- Where Sticker is facing is important. The stickers for the front and the back should be facing away from each other

Install Right1, Right2, Right3 bar between Front and Back frame

- First Install Right3, put the screw between extrusion and slide all the way down toward to rubber feet.
- Then Install Right2, Use the previous found BH M6-20 to secure it in the middle by locking from outside
- Finally Install Right1
- Sticker side of bar should face outward
- Do not overtighten - you may need to adjust things slightly in later steps.

Install Left1, Left2, Left3 bar between Front and Back frame

- Flip the frames over
- First Install Left3, put the screw between extrusion and slide all the way down toward to rubber feet.
- Then Install Left2, Use the previous found BH M6-20 to secure it in the middle
- Finally Install Left1
- Sticker side of bar should face outward
- Do not overtighten - you may need to adjust things slightly in later steps.

The frame should look like this when it is done correctly

- Stickers from all 4 sides should facing outward, like the picture shown
- If you have problem, you can use this video as guideline

Z-Axis - Platform

Instruction starts next page.

You can use Video Tutorial Part 4 to help

Find the assembled Z-Axis in the box that looks like this

video tutorial part 4

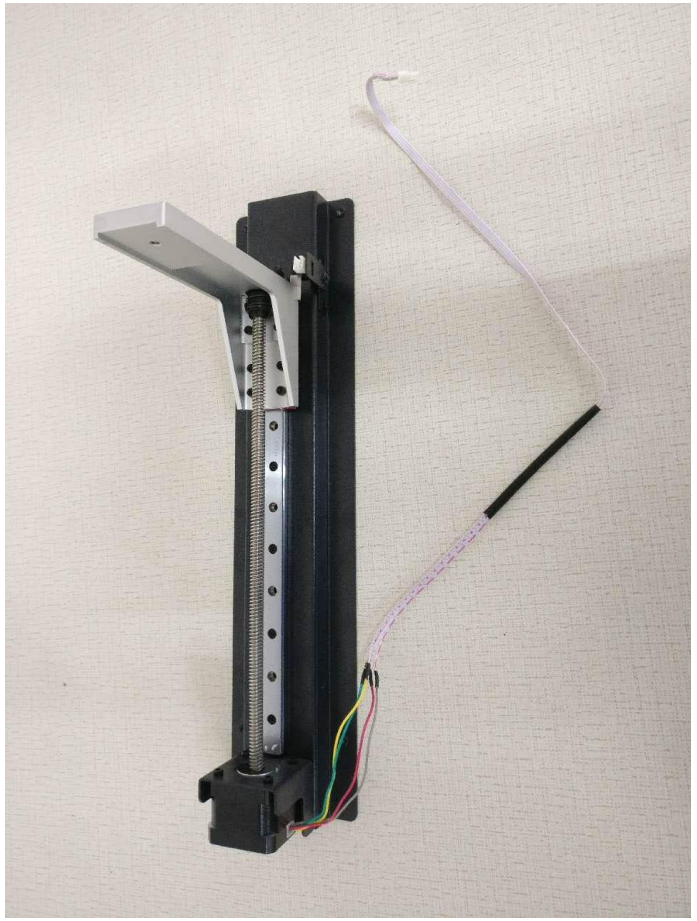

Find the Endstop Sensor cable that looks like this

video tutorial part 4

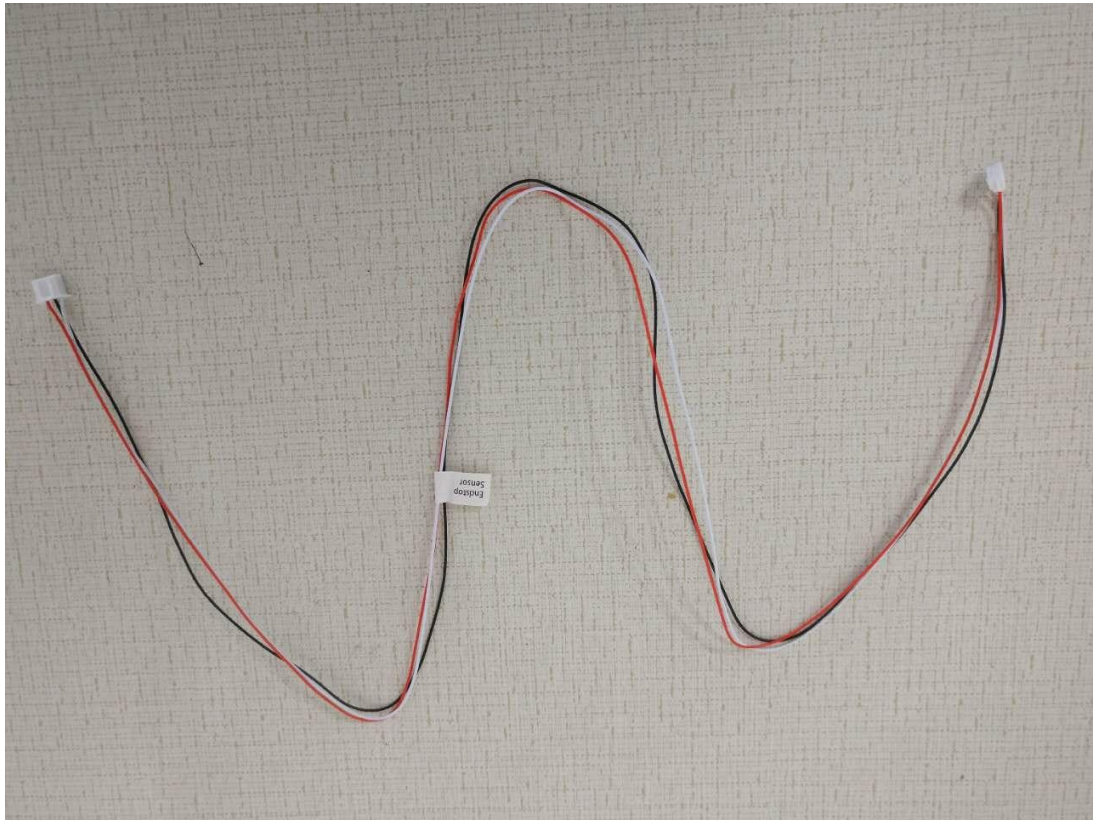

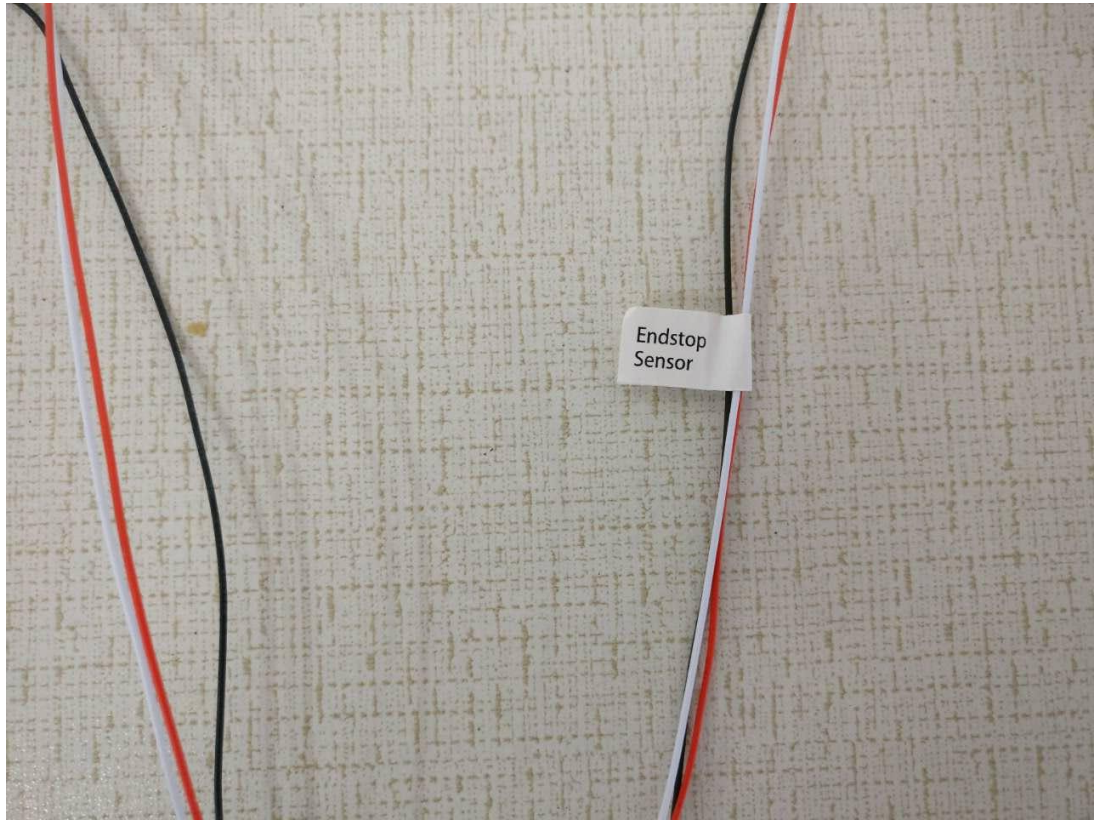

Connect Endstop Sensor cable to Z-axis as following

video tutorial part 4

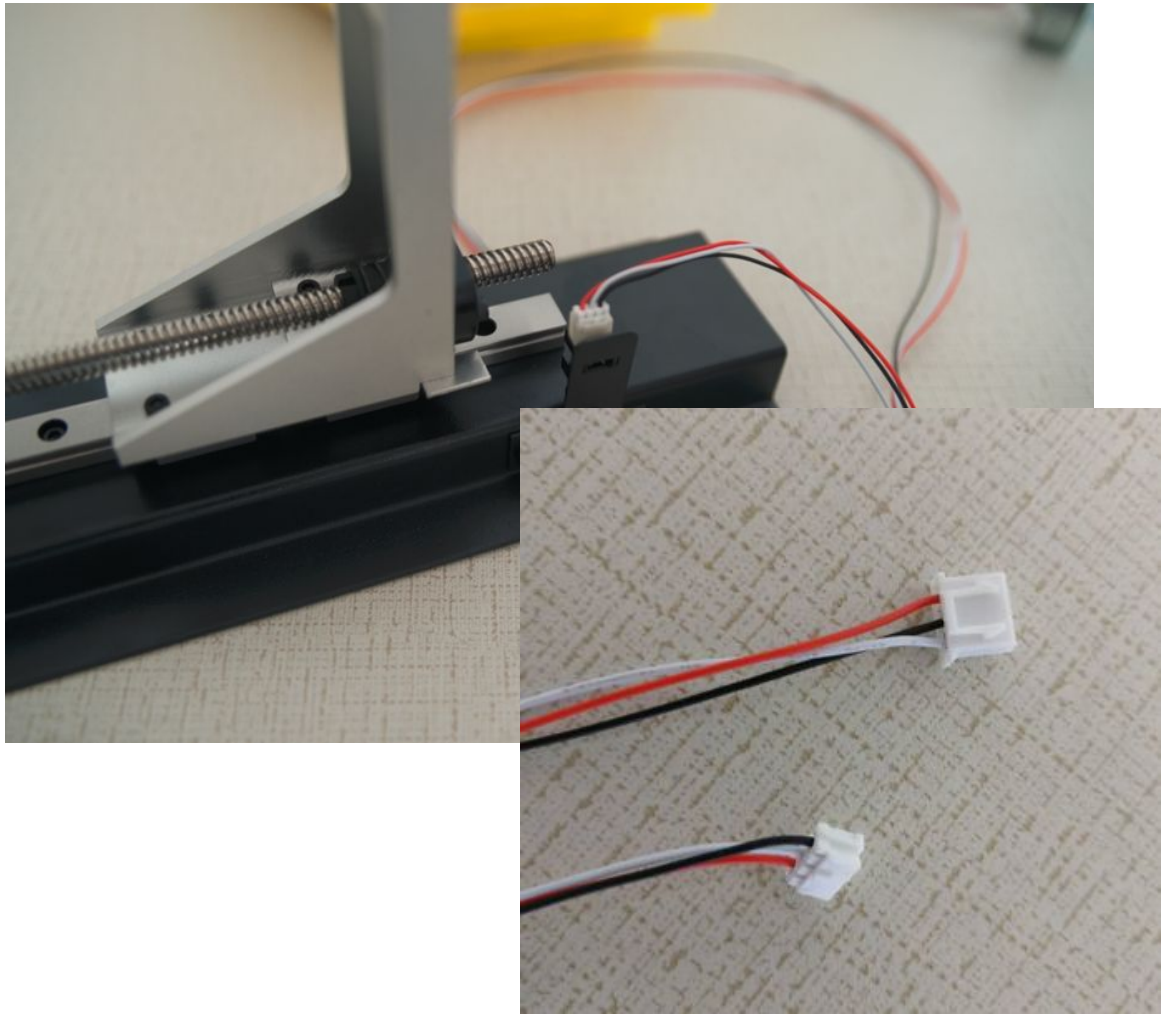

- The smaller connector on the endstop sensor cable goes into the socket on the Z-axis.
- Ensure connection is secure as this is needed to stop Z-axis motor from over extending the build plate arm

Find 4 CH M3-20 screws and use it to Mount Z-Axis to Back frame

video tutorial part 4

The bolt head goes on the outside of the frame and screws into the built-in threads
on the Z-axis.

When installing, we now recommend checking to see these eight screws locking the build plate arm are secured. The screws may have become loose during shipment:

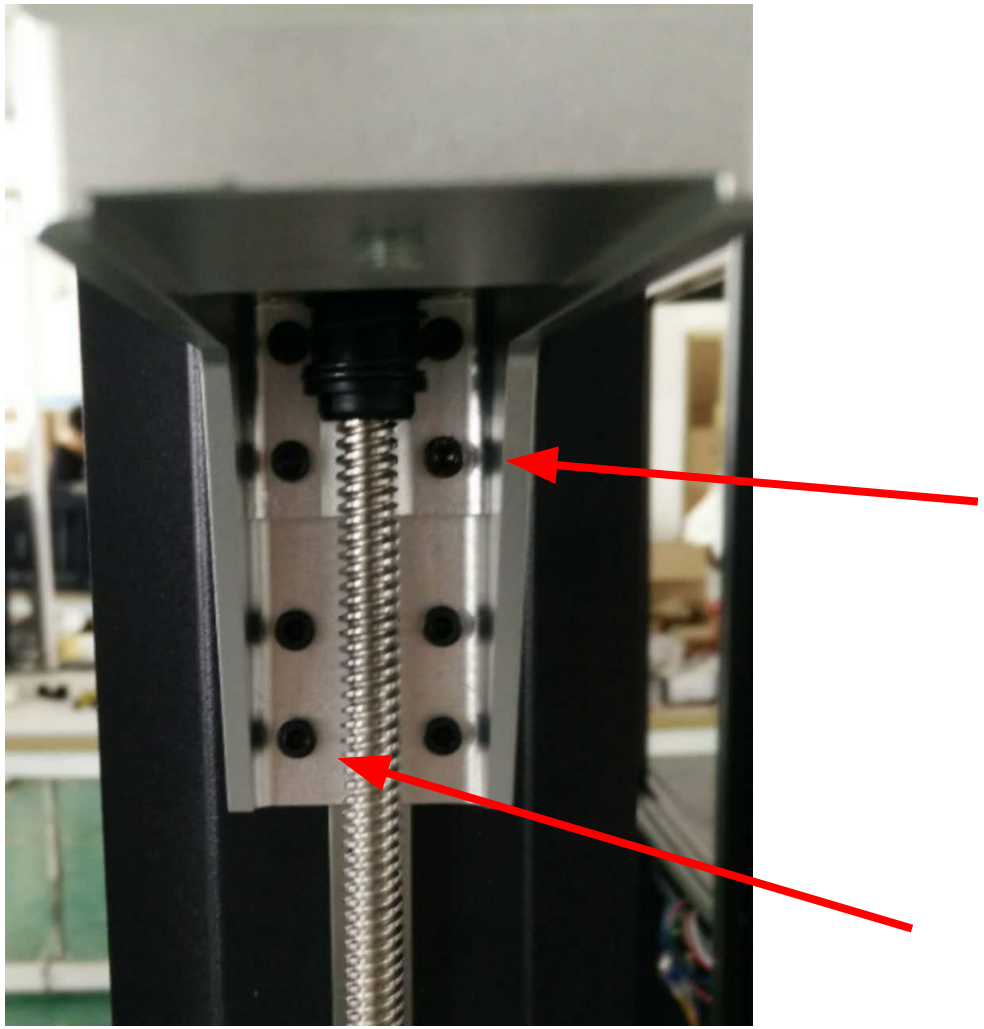

With Z-axis and rails installed, Moai should look like this now

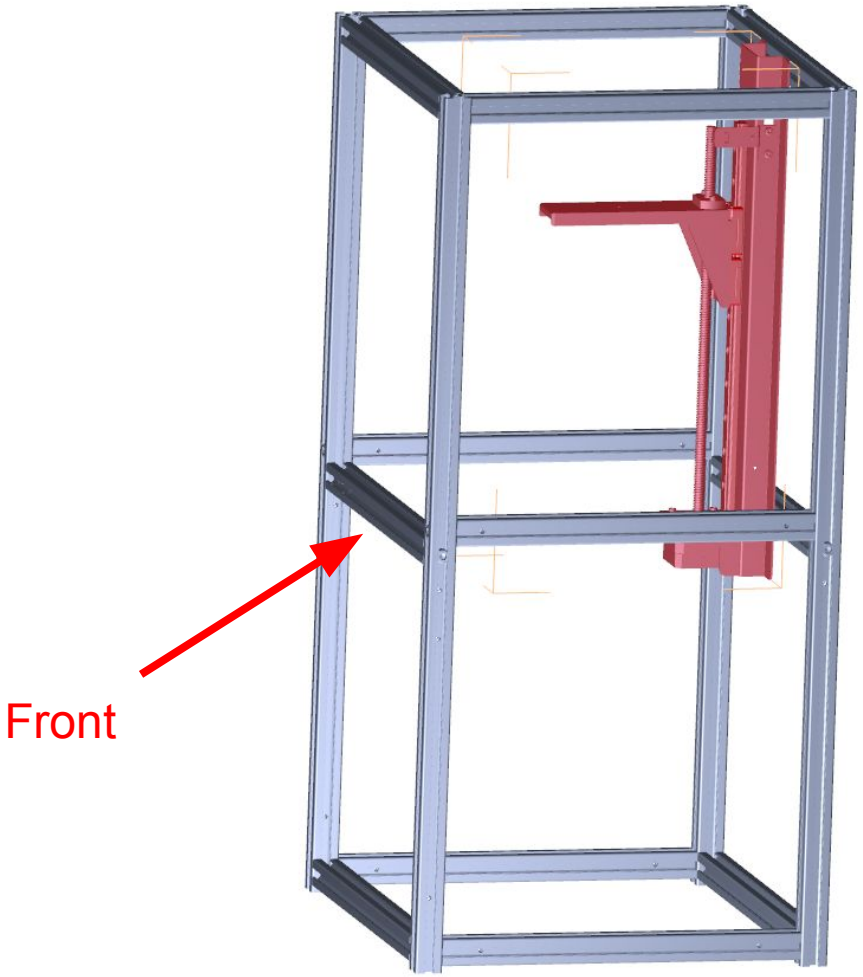

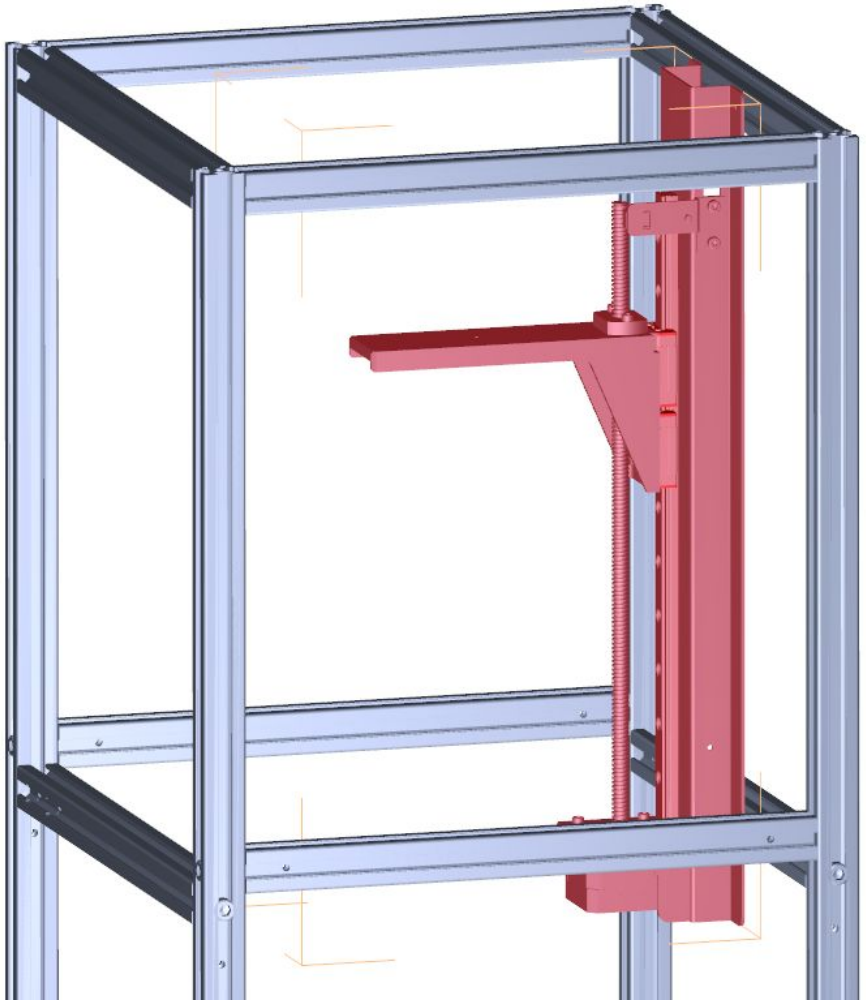

Once the Z-Axis is secured, find the Platform, it comes assembled

video tutorial part 4

Find 4 CH M5-27 screws and nut. two Silver colored bracket

Put the Silver Bracket on the Platform's metal rod.
Install the Platform cross from Front and Back frame with the beam is close to the Left Frame
Use CH M5-27 screws to secure. Should install both Silver Brackets first before tightening. Silver Brackets as it touch both Front and Back frame. Keep the rod somewhat loose as you need to make adjustment later video tutorial part 4

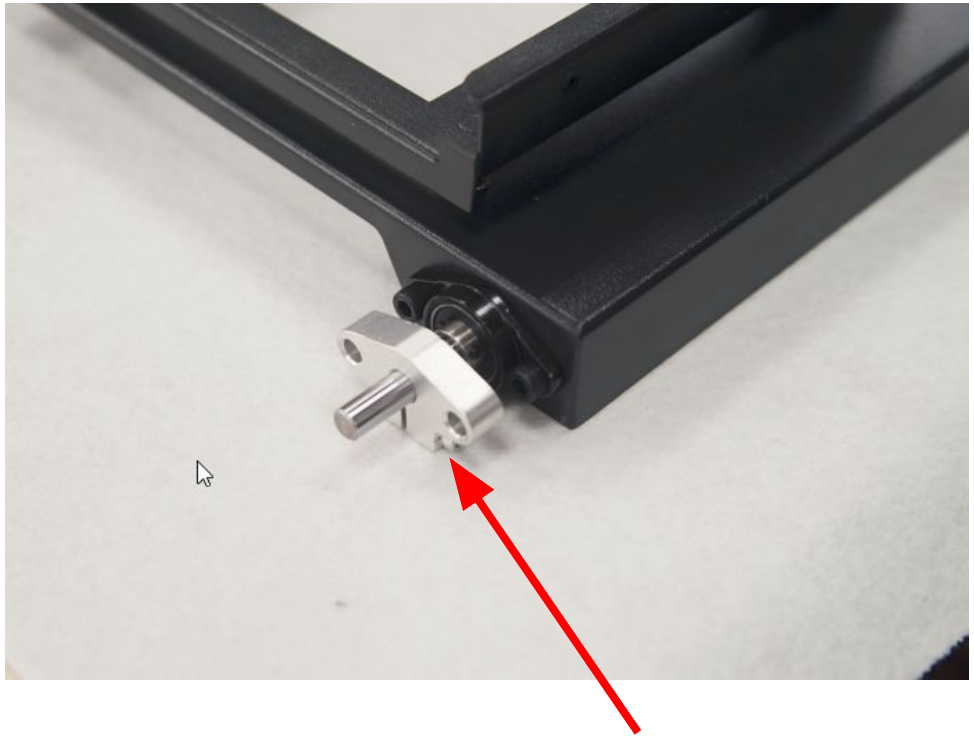

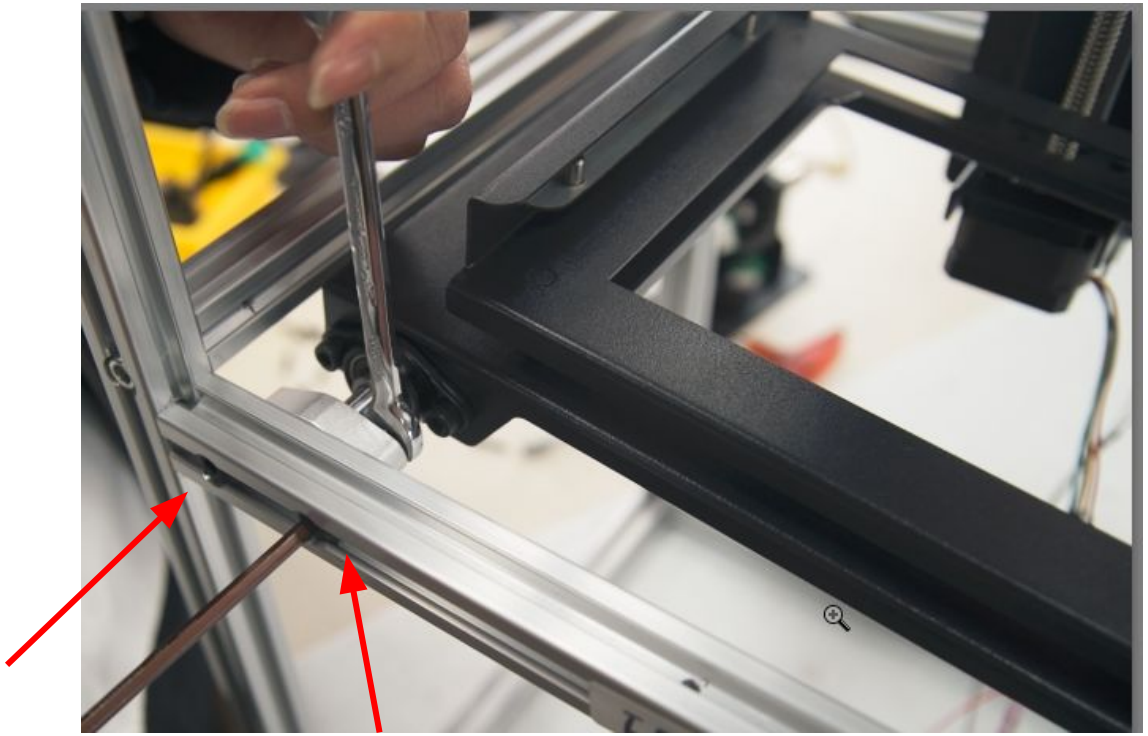

Find the below metal piece in the lower right piece
secure it with between Front and Back frame near Right side.
4 CH M3-20 screws
This is easiest if you insert the top 2 screws first, then the back 2 should go in easily.
video tutorial part 4

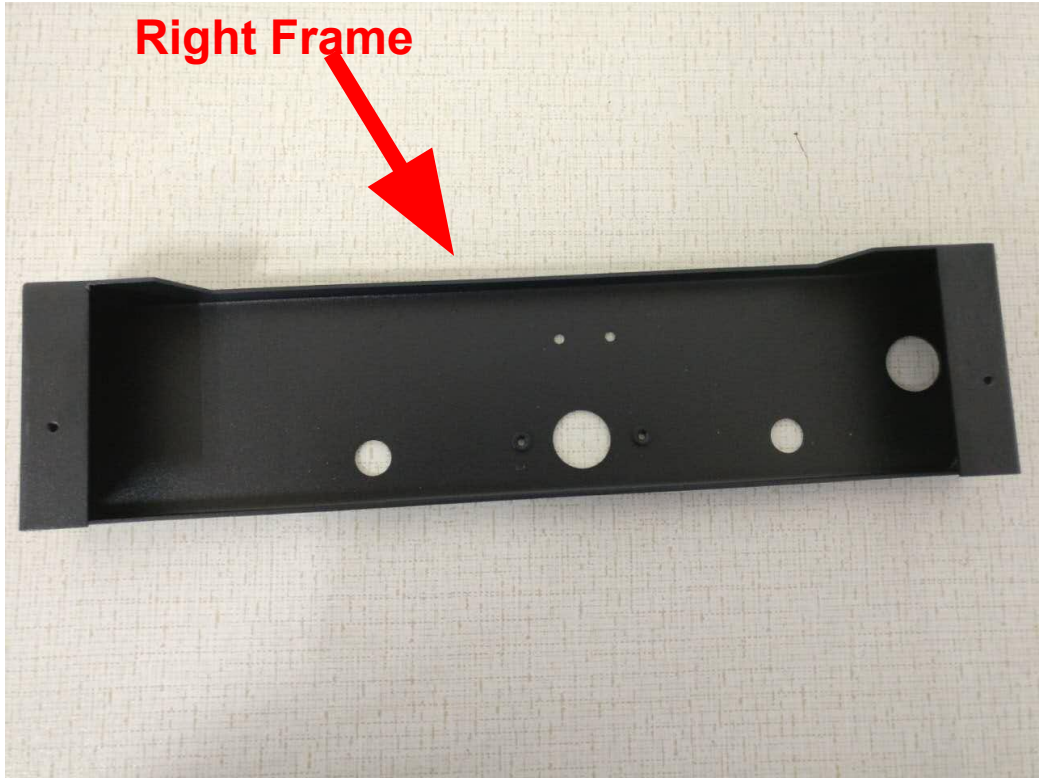

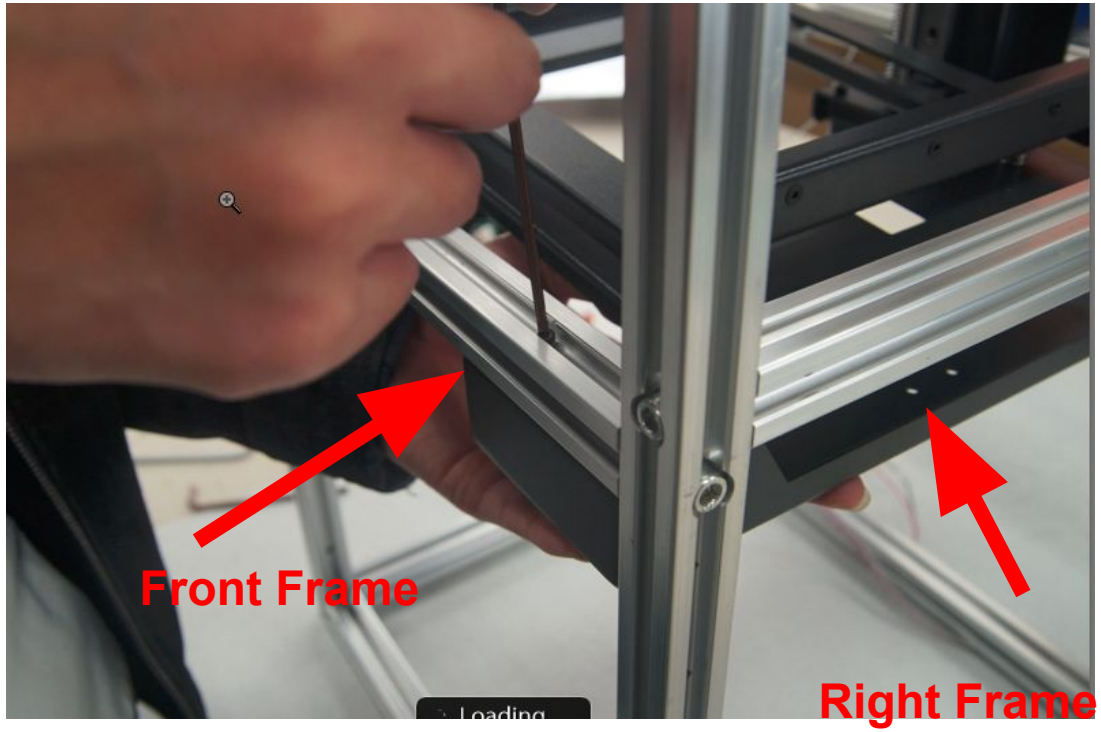

Moai should look like this at this point

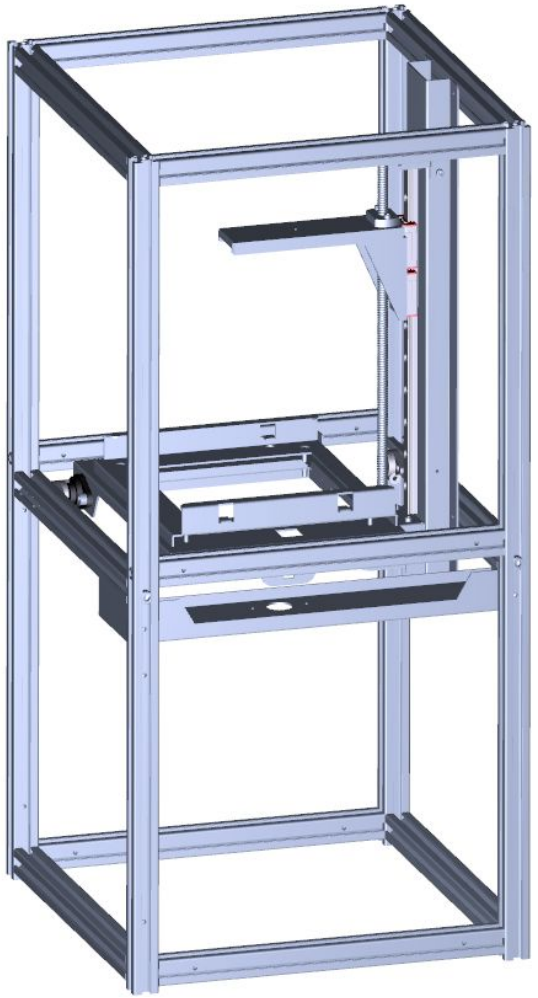

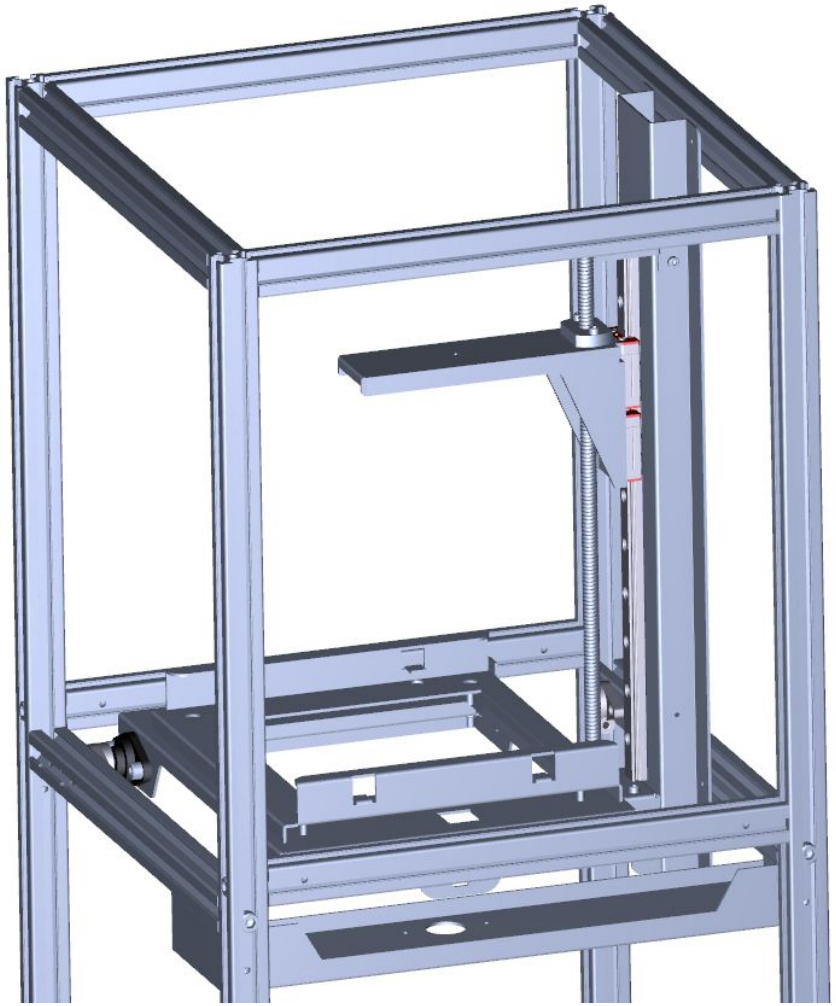

Riser Motors and Panels

Instruction starts next page.

You can use Video Tutorial Part5 to help

Find the Rise Motor and the two Brackets

Video Tutorial part 5

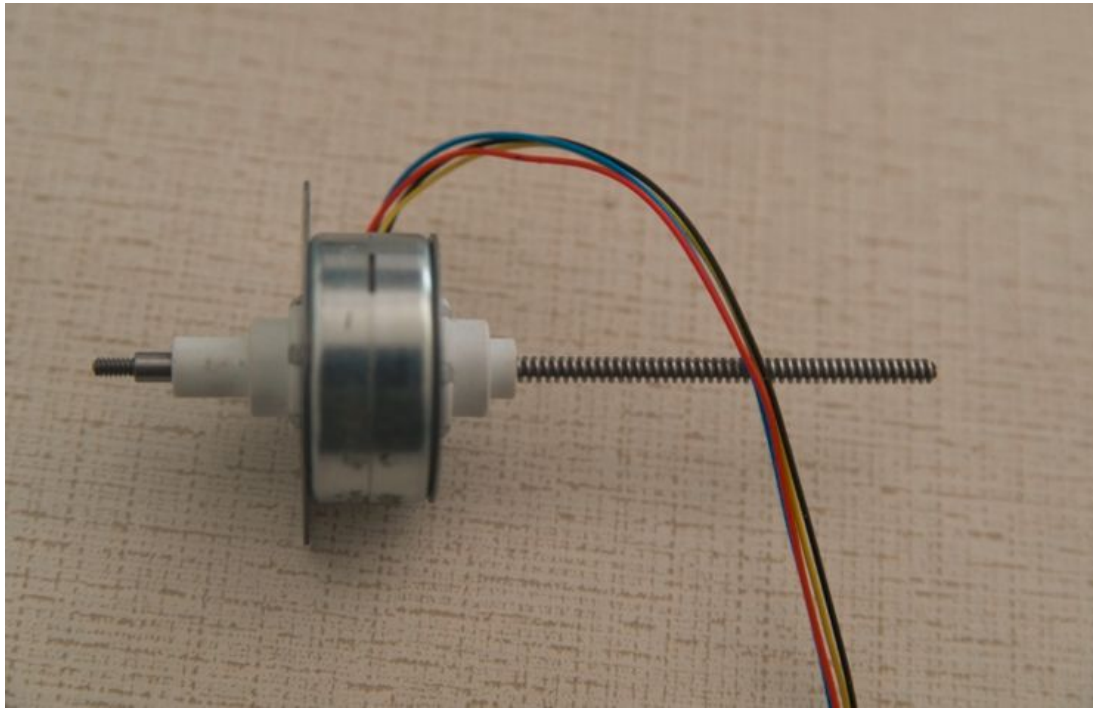

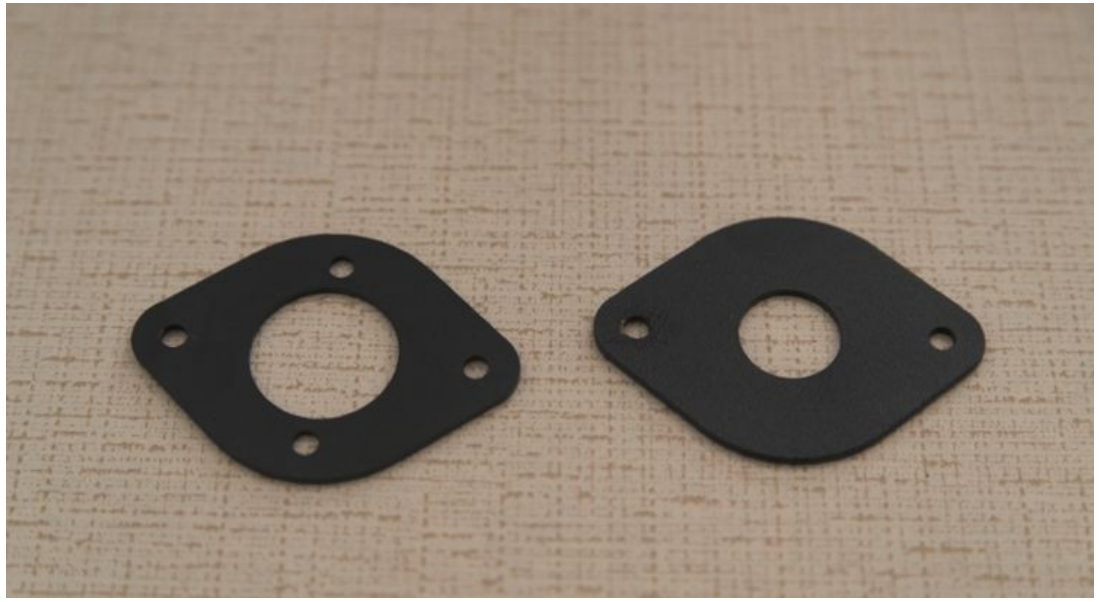

Install Brackets on Rise Motor like this

Video Tutorial part 5

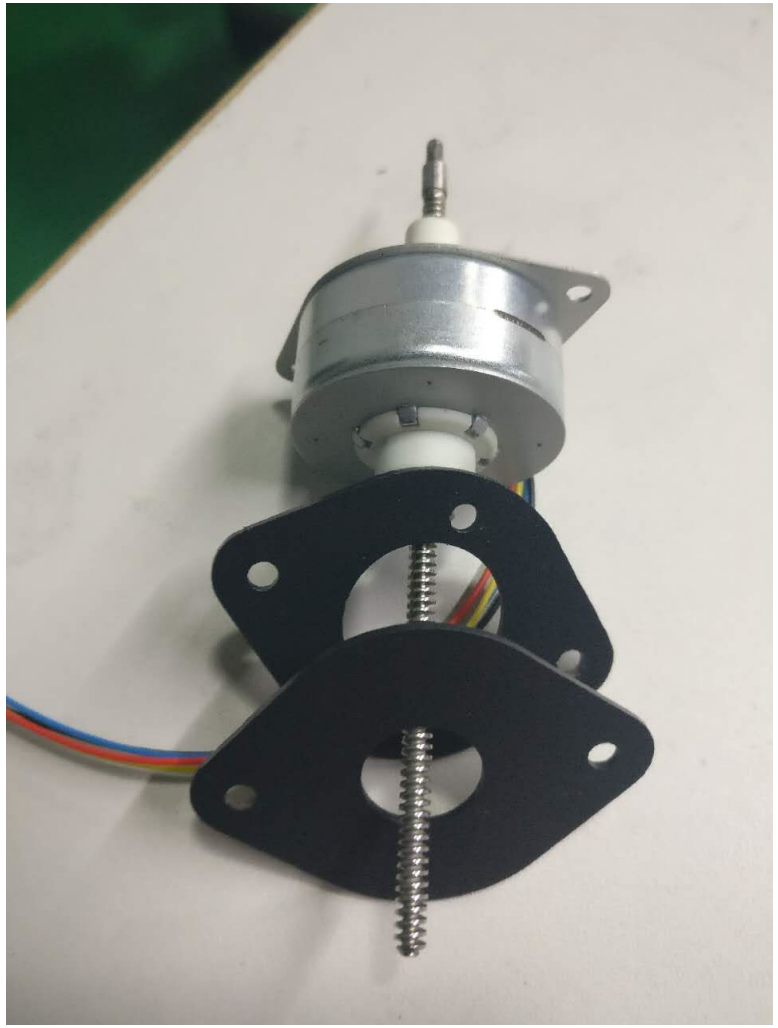

The bracket with larger center hole goes in first.

Secure Rise Motor with CH M3-25 from the bottom near Right frame

[Video Tutorial part 5]

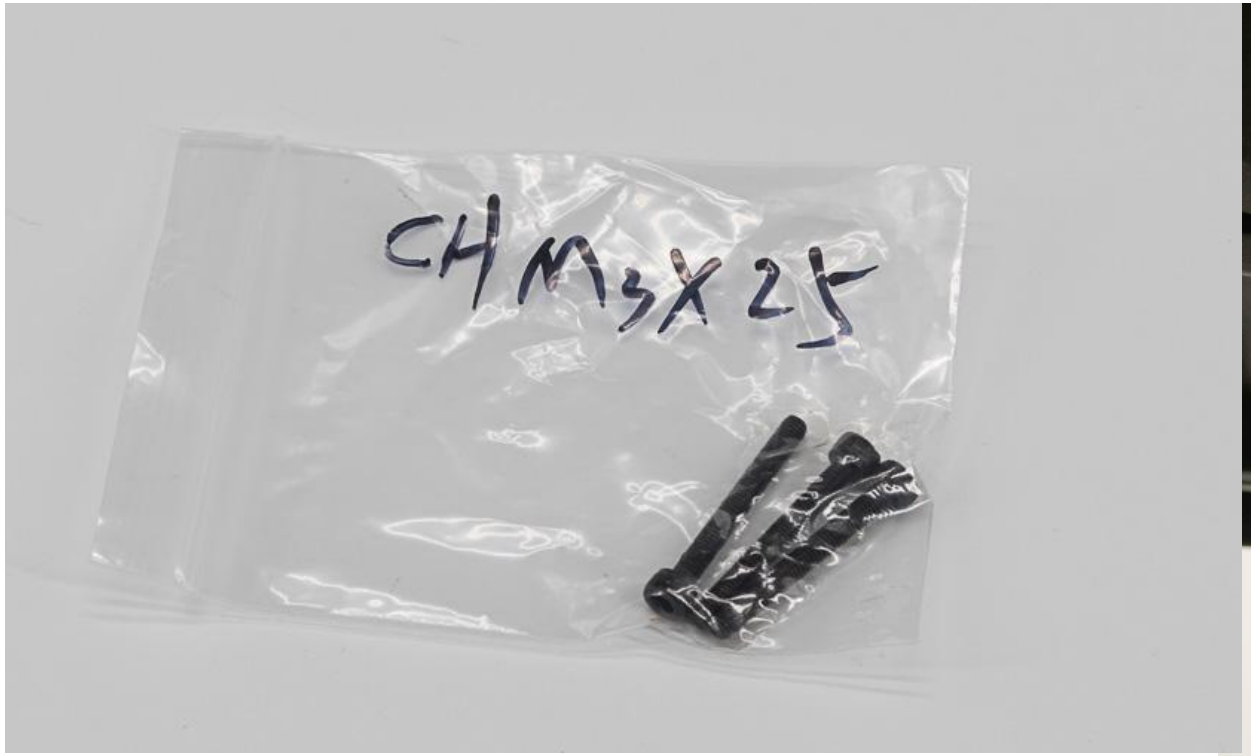

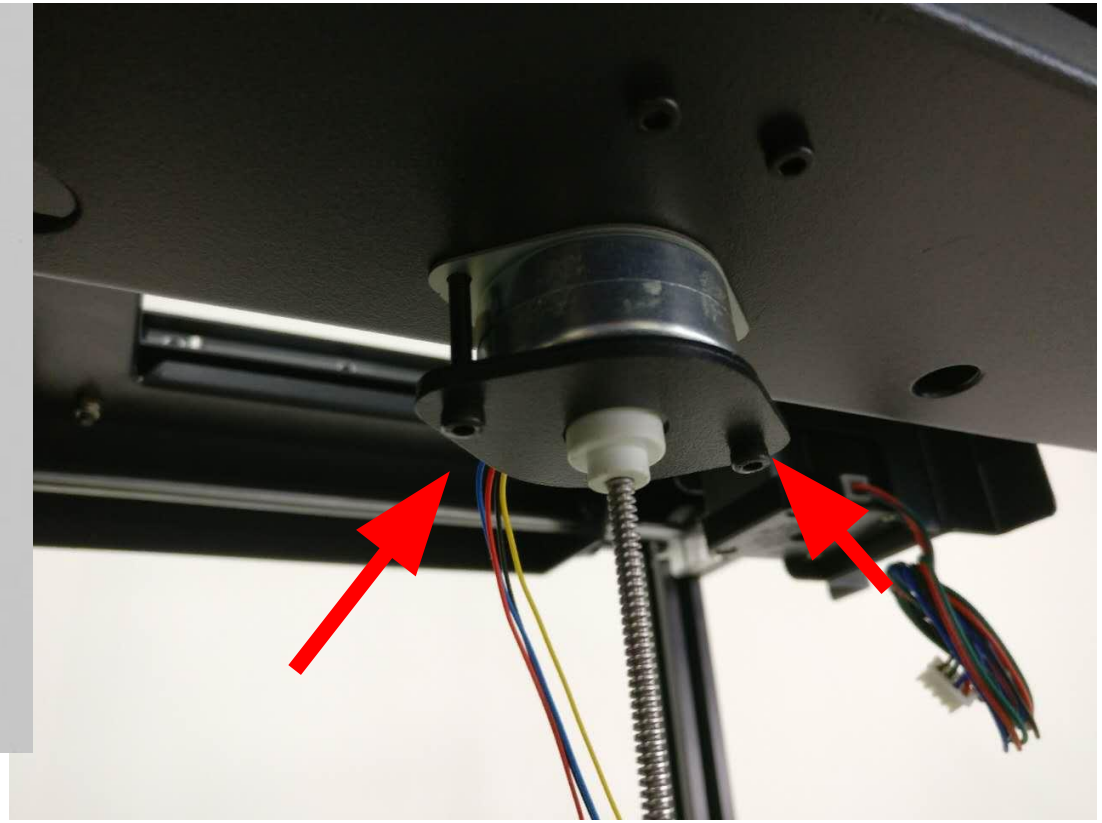

Here is the location of Rise Motor with respect to Moai

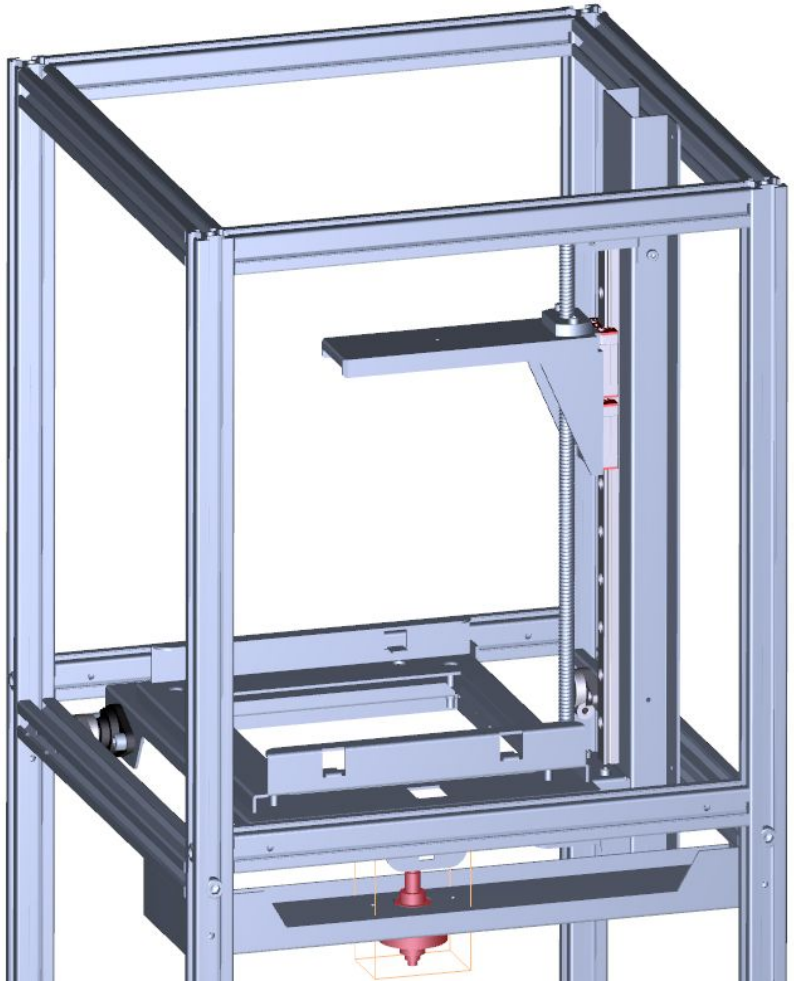

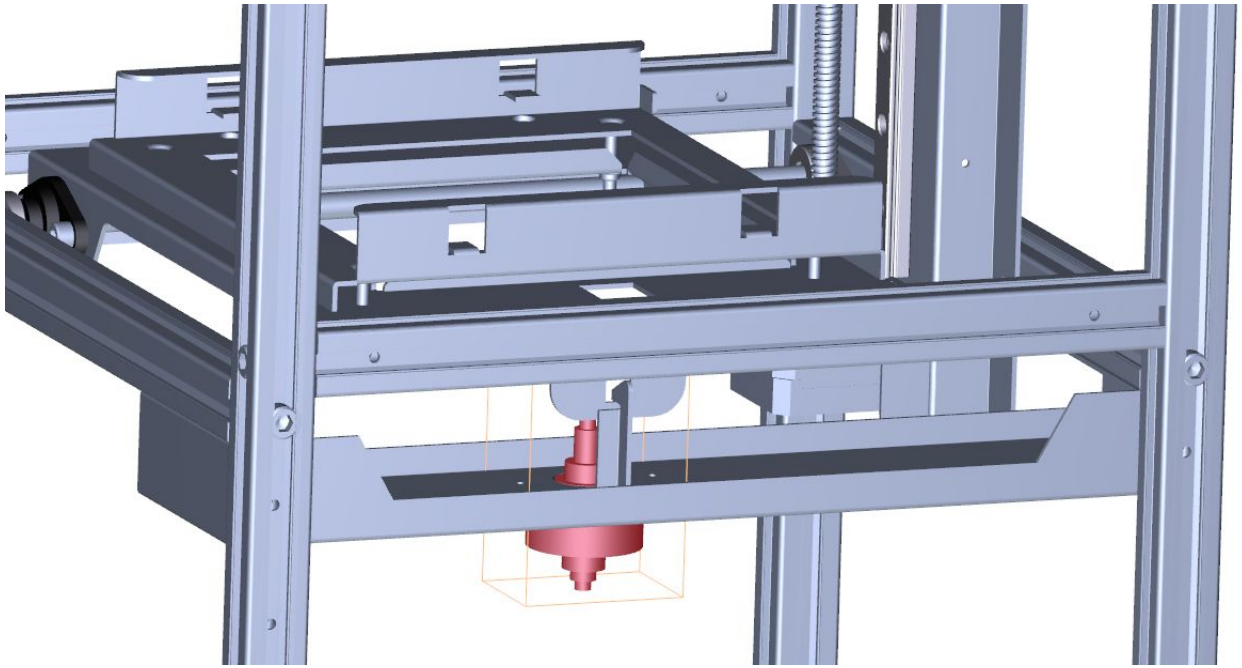

Use hand to turn the long threaded beam on Riser Motor upward, such that it screws into the tiny Silver Metal Part. (move the platform a bit if needed)
Move the beam up to a point where the unthreaded metal cylinder touches Silver Metal Part. The use the CH M3-4 or CH M3-5 to tighten it. No need to over secure it. Make sure the Silver Metal Part is straight with the Riser Motor's beam
Video Tutorial part 5

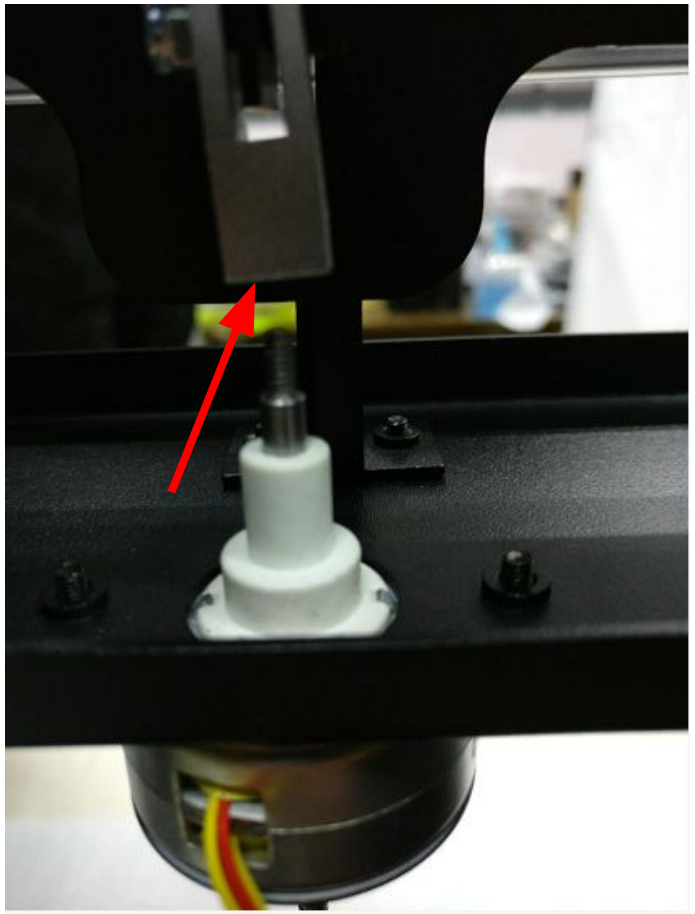

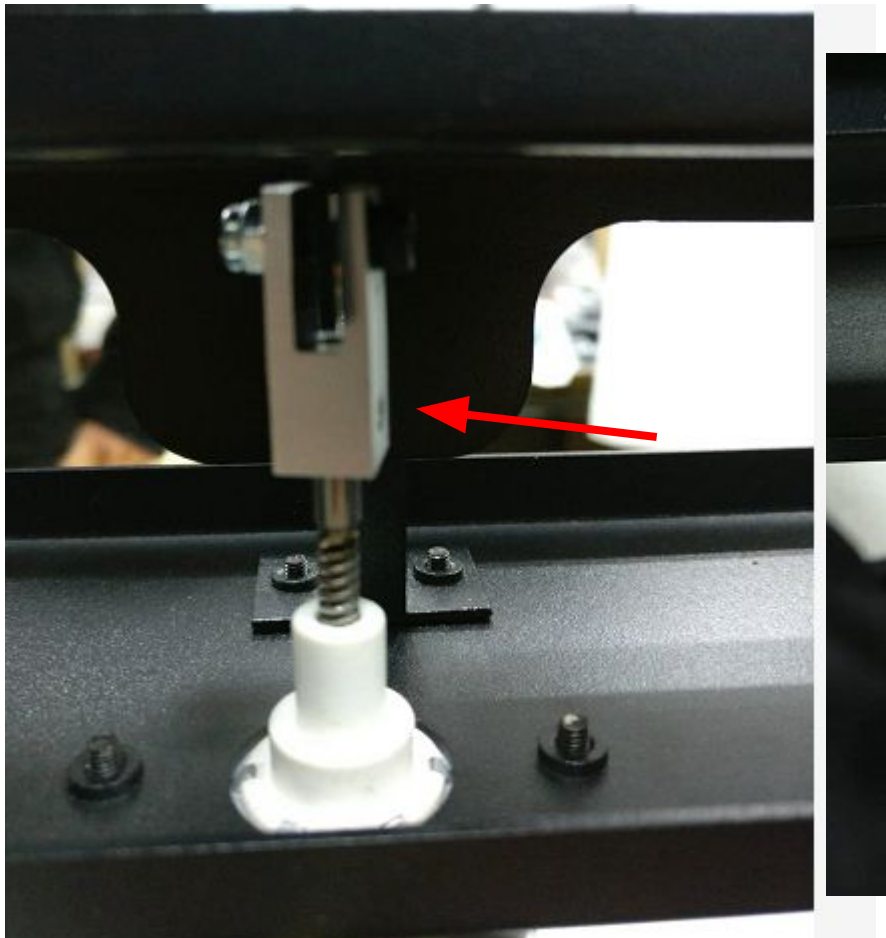

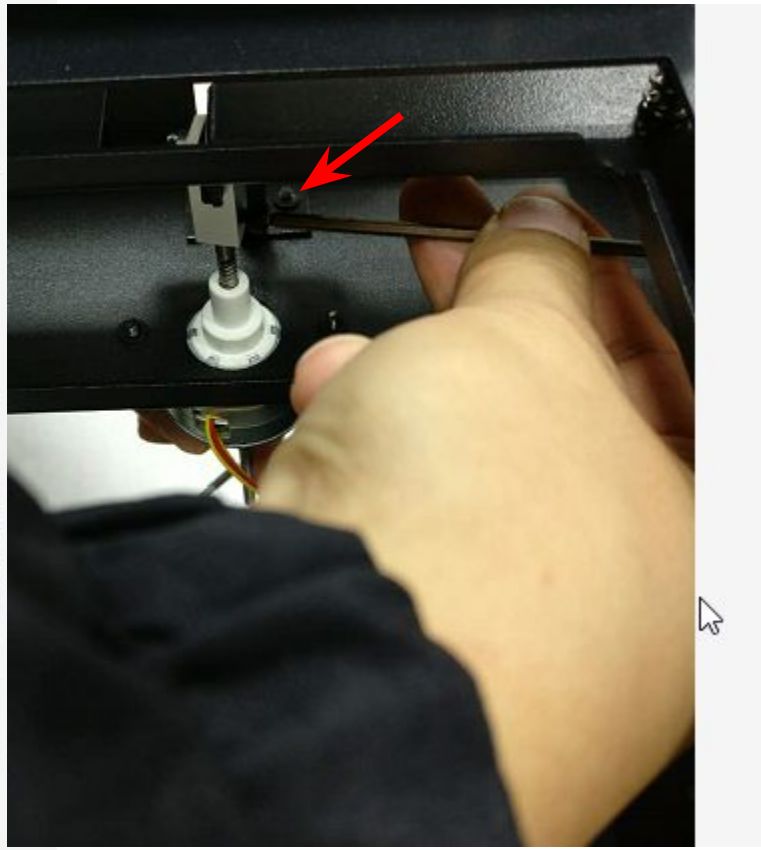

A frequent installation mistake in this part is that the metal is not in the center of the Silver Metal Part and it would rub against each other during move. You can center the black metal piece by moving the Platform via loosening the screws on the Silver colored brackets on each end of the metal bar

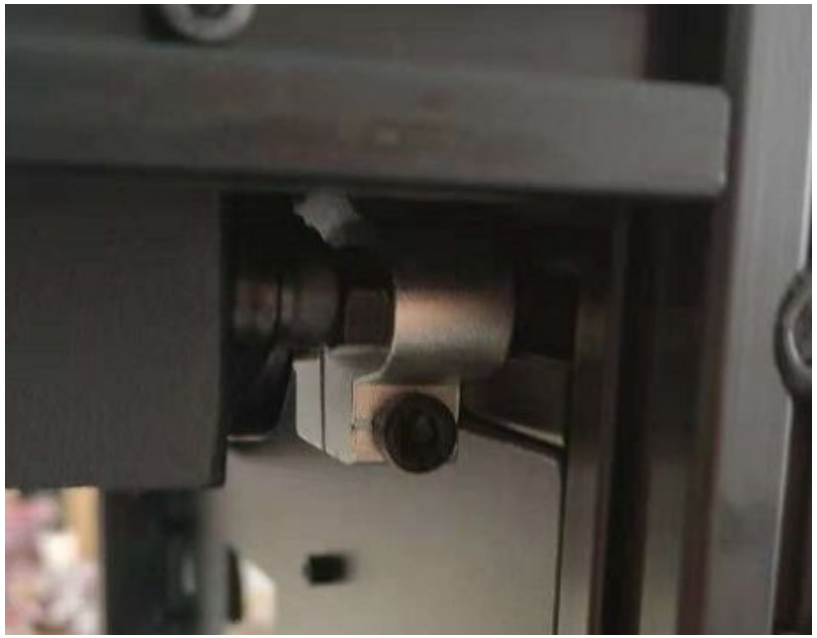

After you are able to install and align Riser Motor to the platform, it is time to secure the metal rods so it does not wiggle at all. Secure and tighten all screws pointed out by arrows in below pictures. There are 3 on each Silver Bracket
Follo video here if you have issues.
*This is a common area where use forgotten to tighten and it affects printing later on.

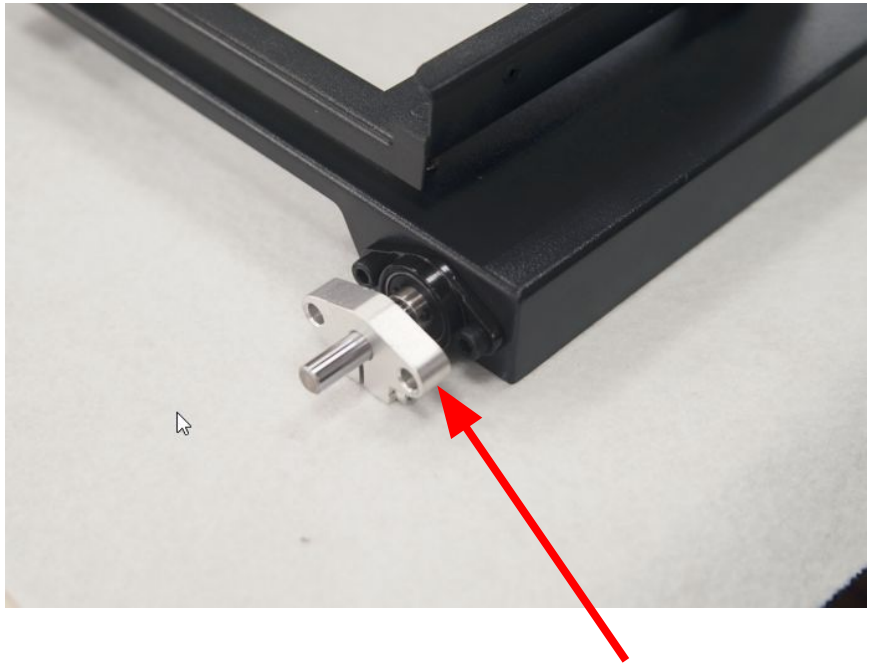

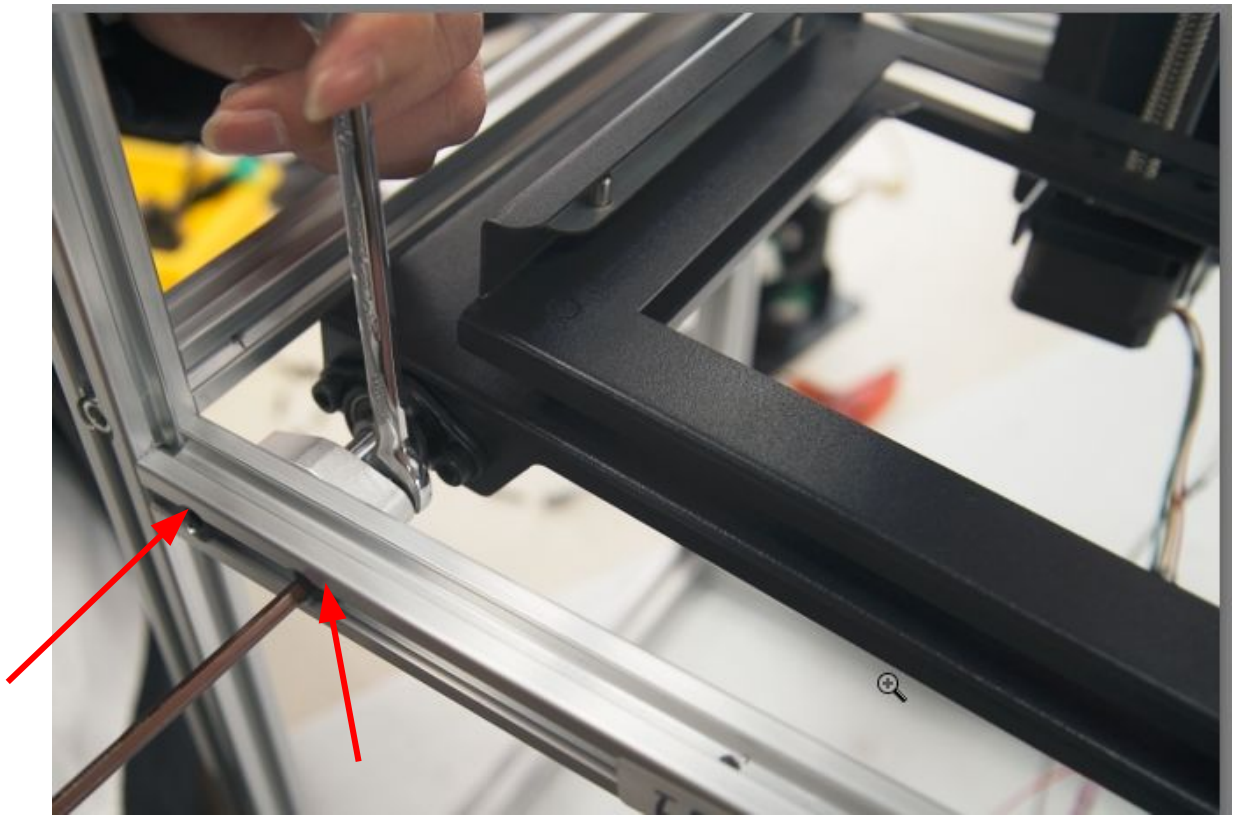

Find this Metal Piece with Hook. And 2 CH M3-6 screws

Video Tutorial part 5

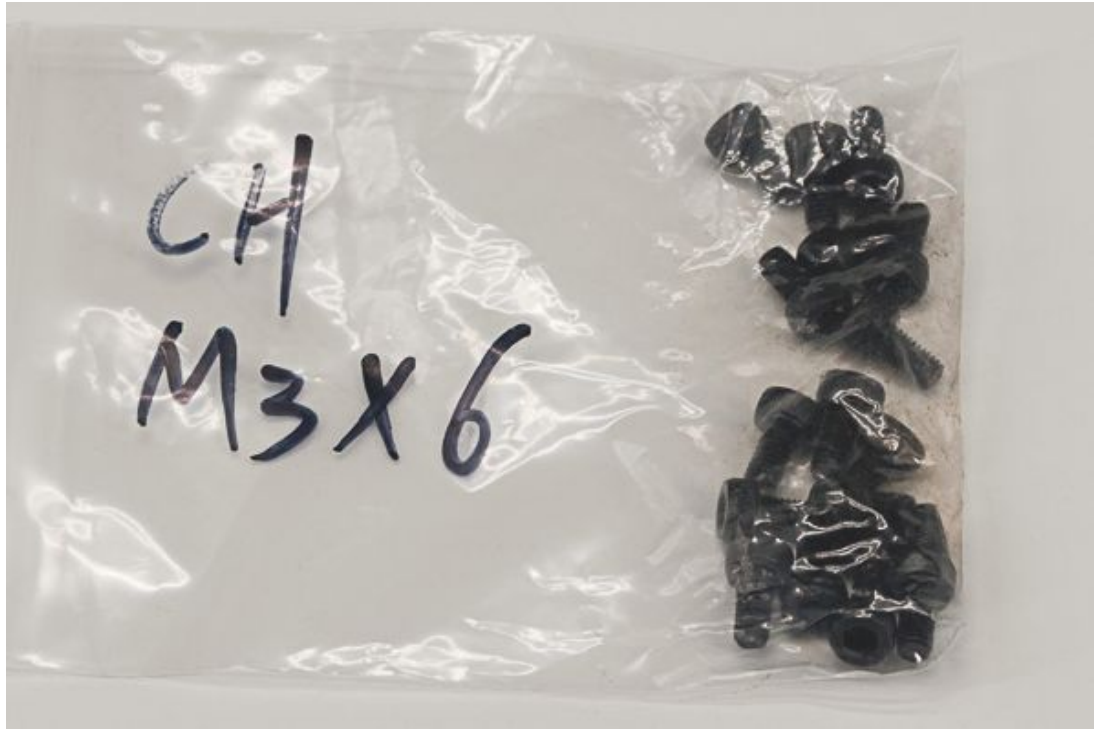

Here is the location of Metal Piece with Hook with respect to Moai

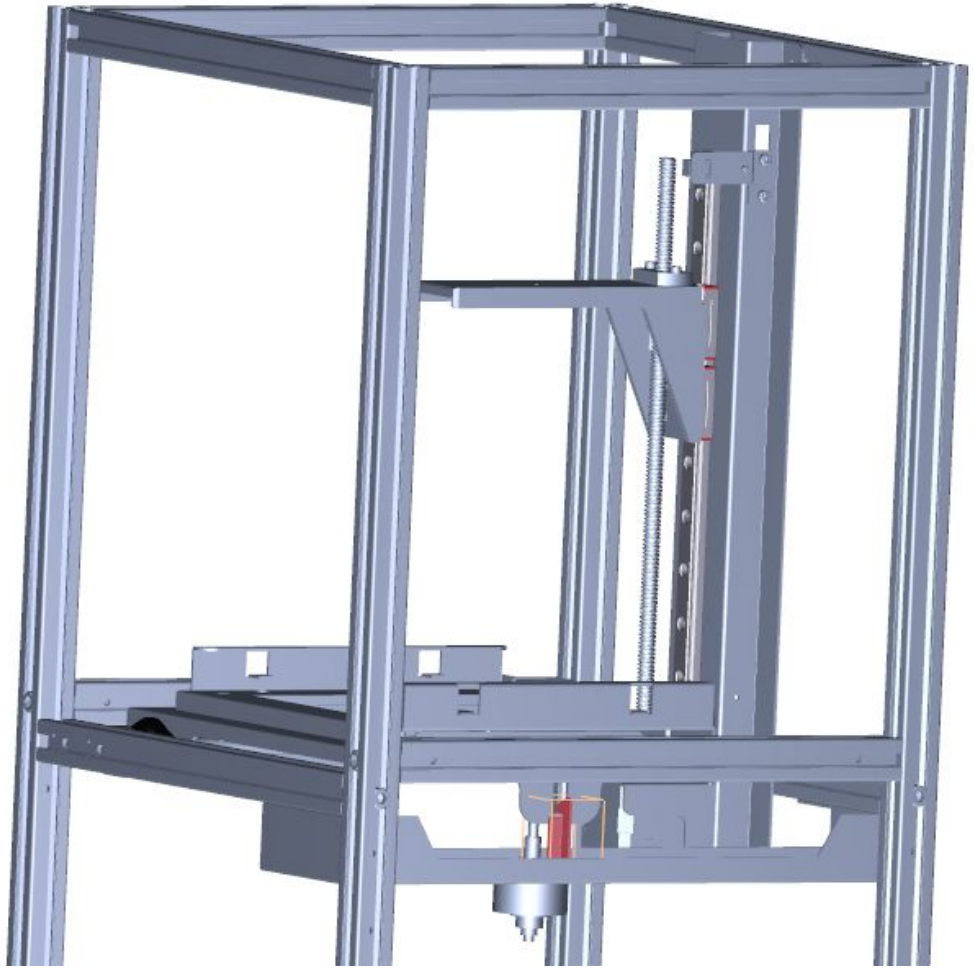

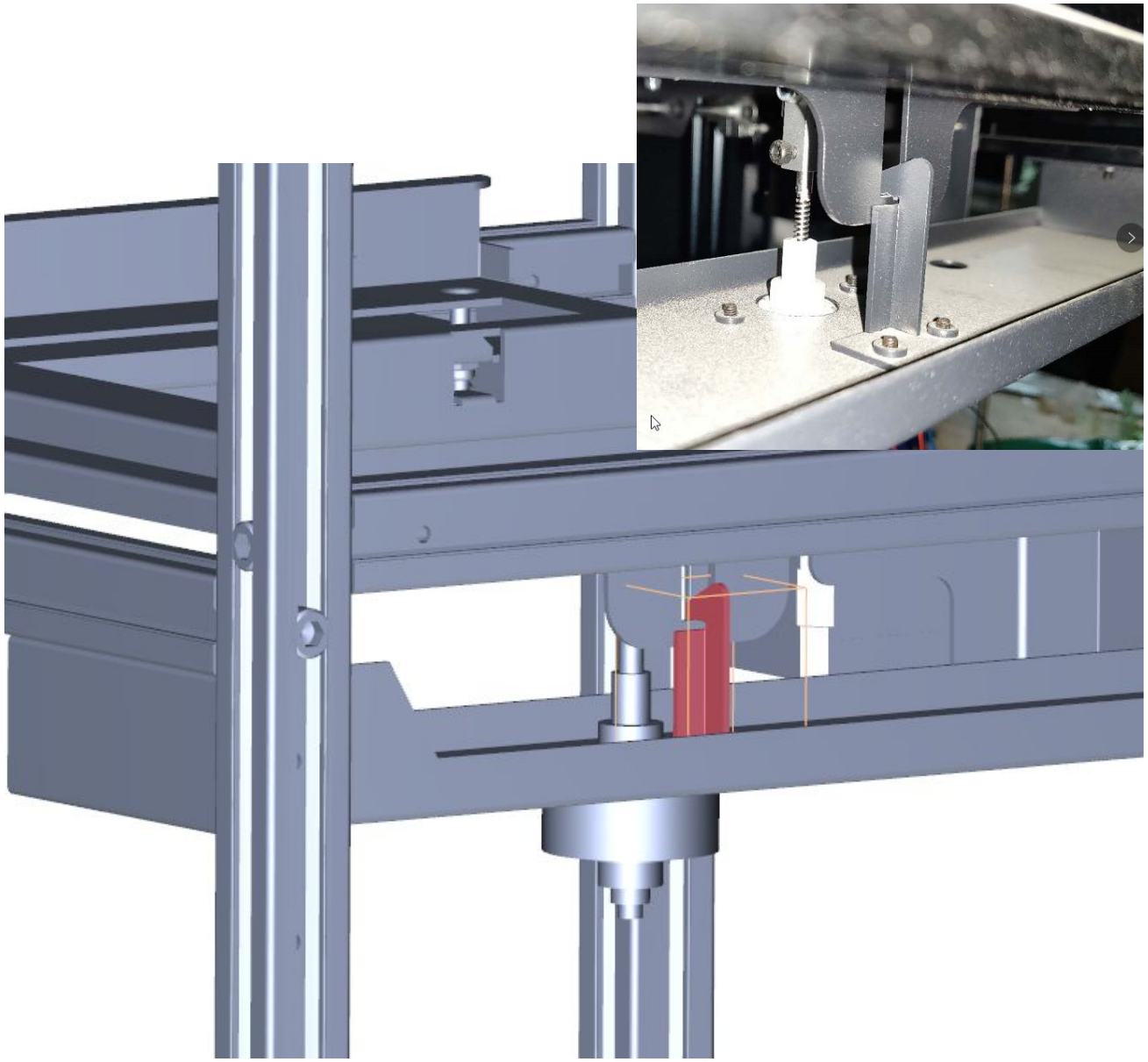

Secure Metal Piece with Hook. At the circle spot with CH M3-6 screws. With the Hook facing inside of the machine, pointing toward to the Rise Motor

Installation tip video here

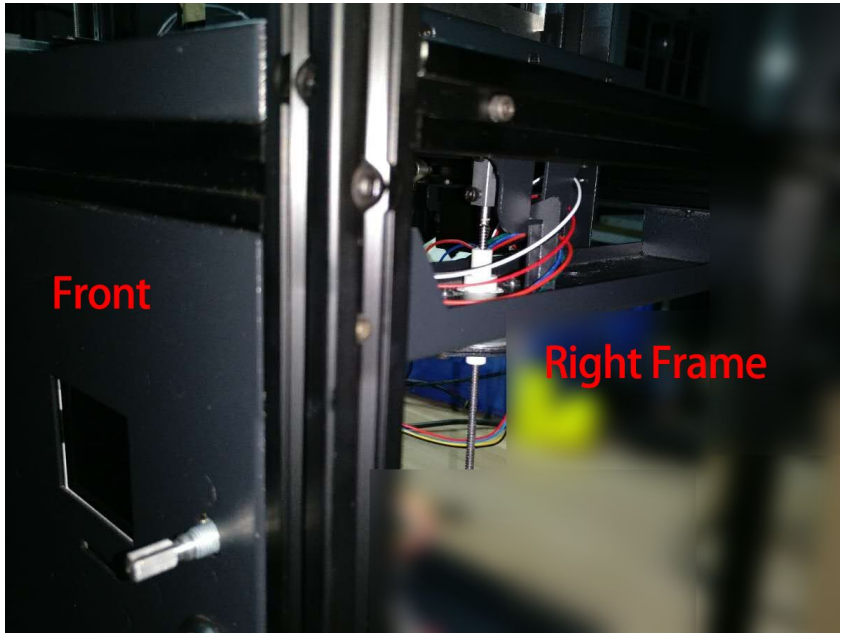

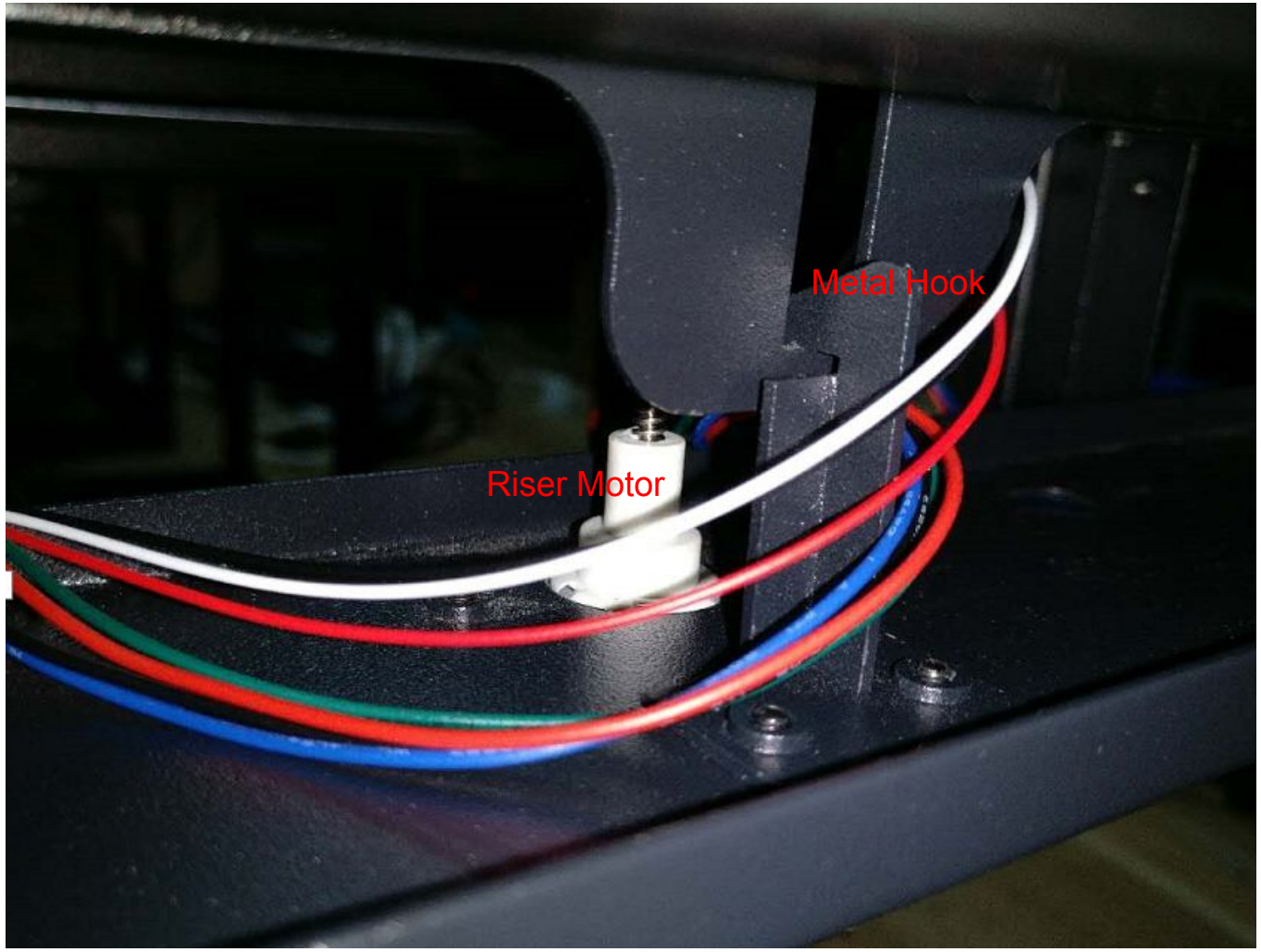

Find the Bottom piece, it has several screw holes on it and one very pronounced screw hole that rise up. The pronounced screw hole should be closest to the Front Frame.

Ues 8 CH M3-20 screws 2 on each side to secure on 4 sides

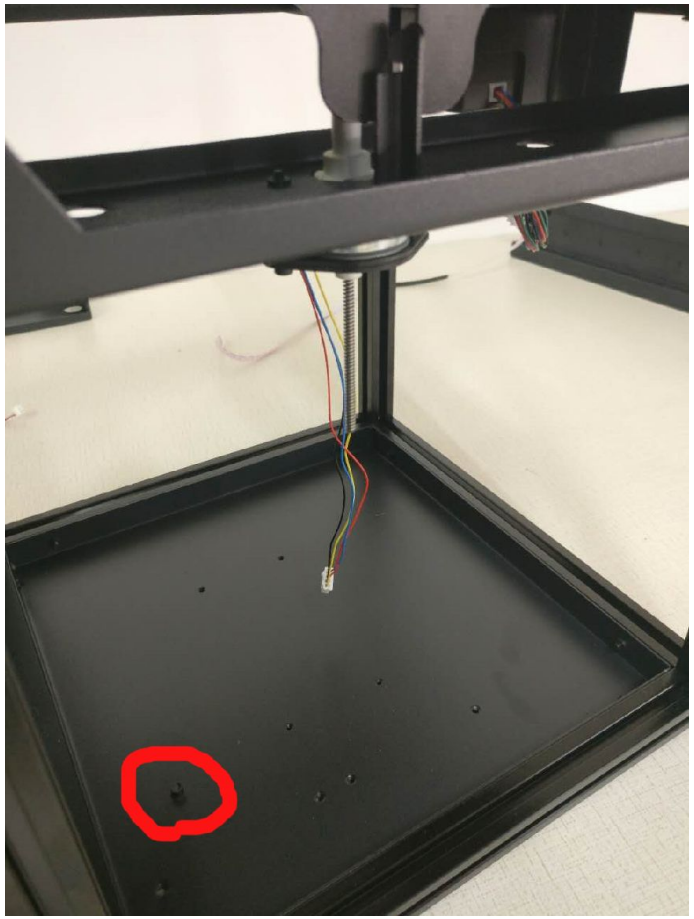

Installer note:

put the screws for front and back in first. If left and right 3 bars were not perfectly aligned, you may need to loosen their screws and align them to the bottom plate (by inserting the screws for the plate), then tighten the bar bolts down. None of the screws should require much force to start - if they do, it means something isn't aligned.

Here is the location of Bottom with respect to Moai

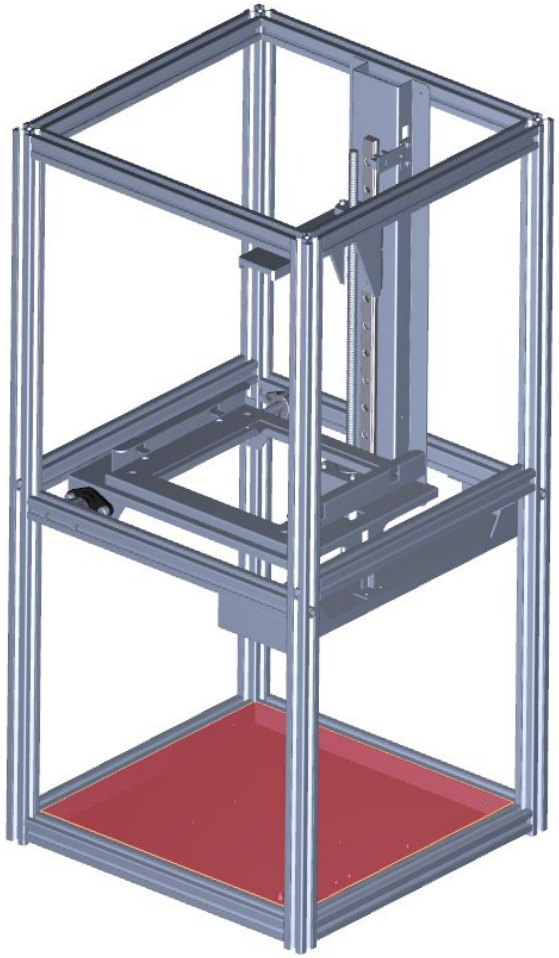

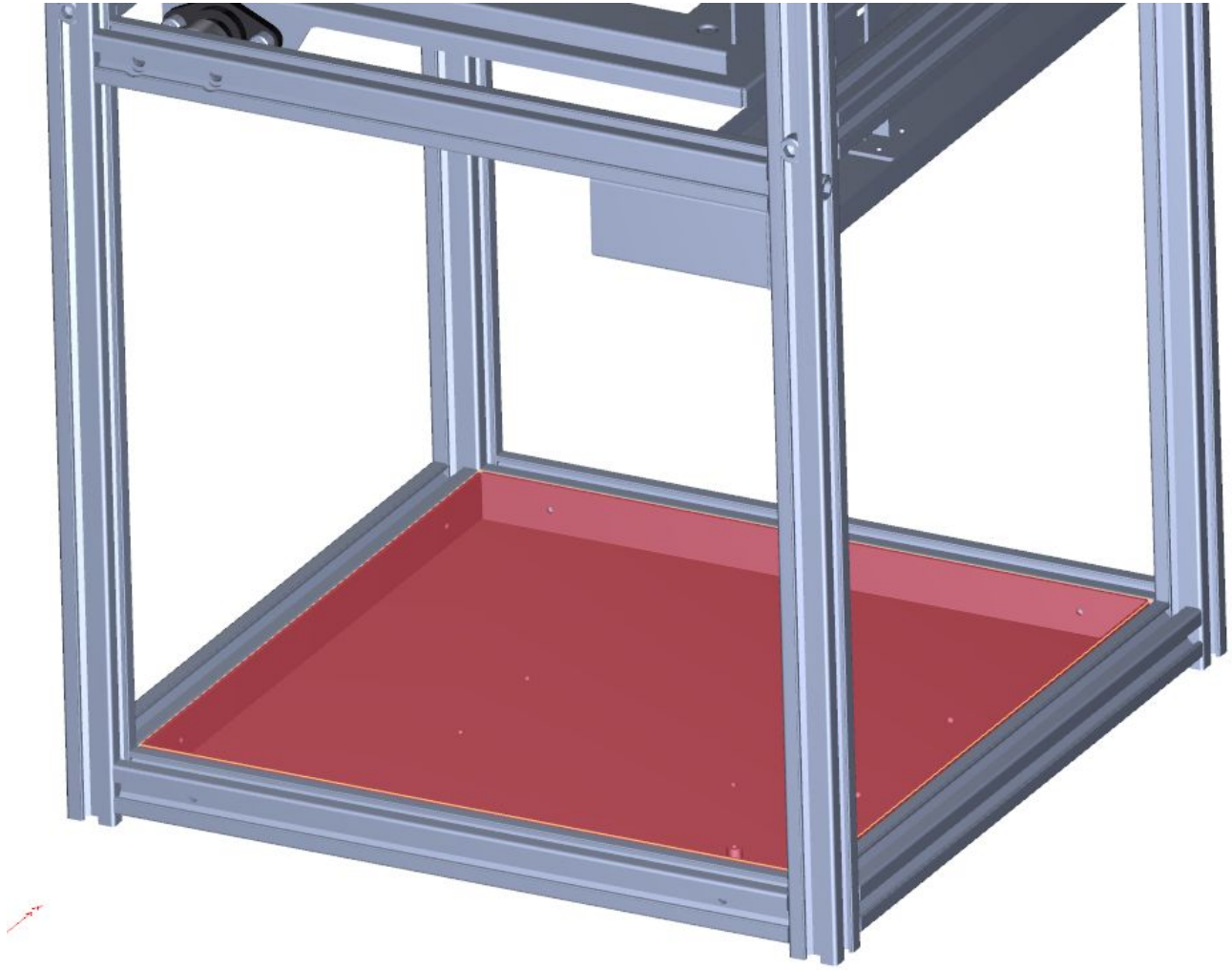

Find the Front Panel. Install it on the Front frame with 6 CH M3-20 screws. 2 each on Left/Right side. 1 each on Top/Bottom

if you insert the top (center) screw first it will hold the panel snugly against the top, and then the left and right screws will be easier to align.

Here is the location of Front Panel with respect to Moai

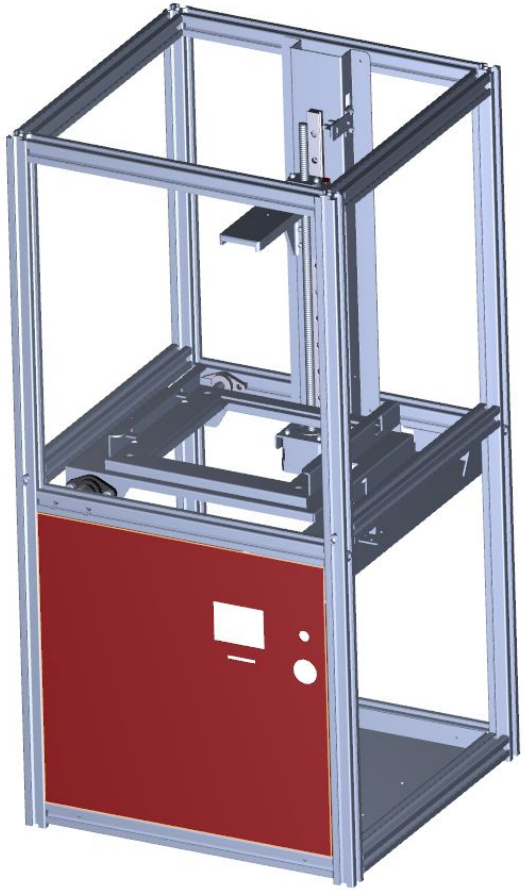

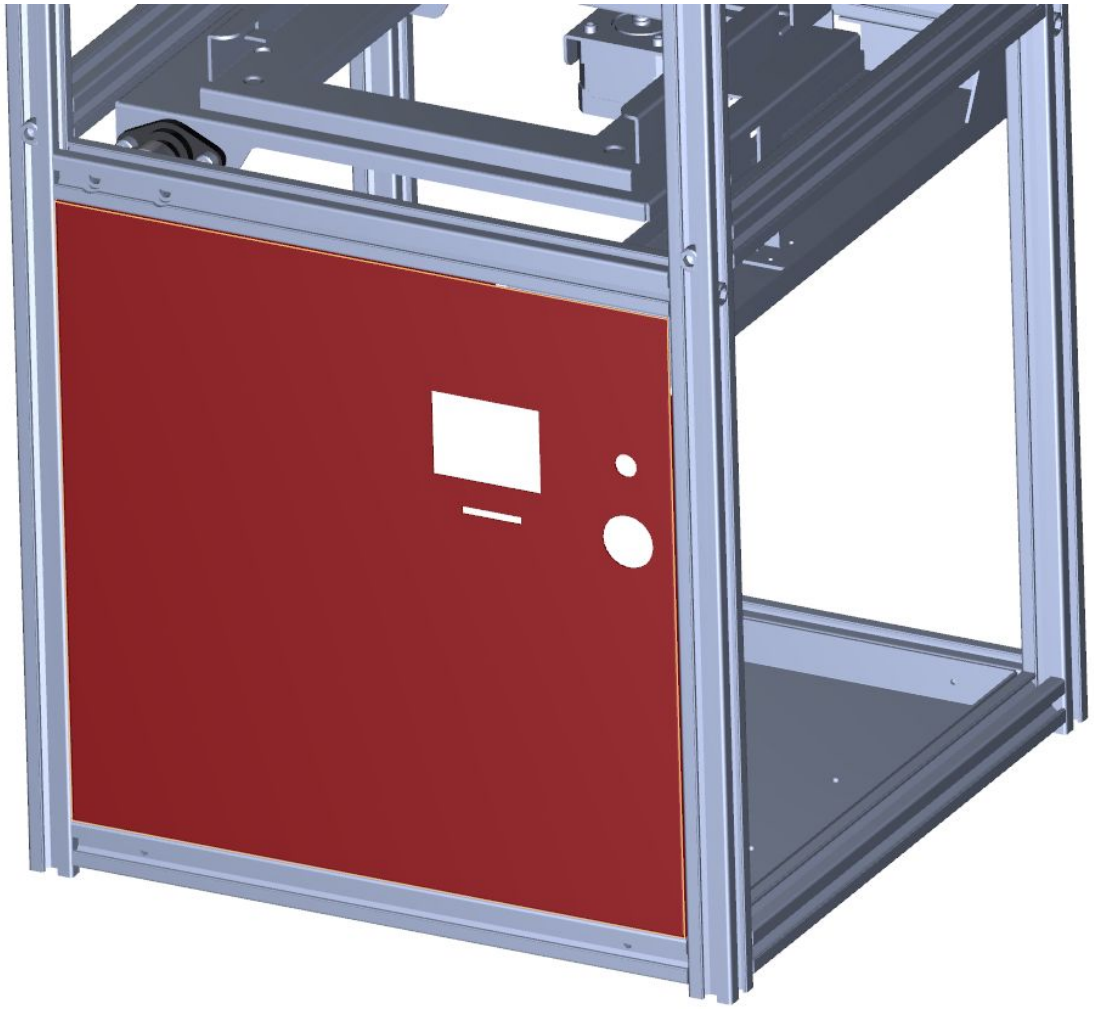

Now let’s organize the PM Motor cables and Endstop Sensor Cables as below (RS)

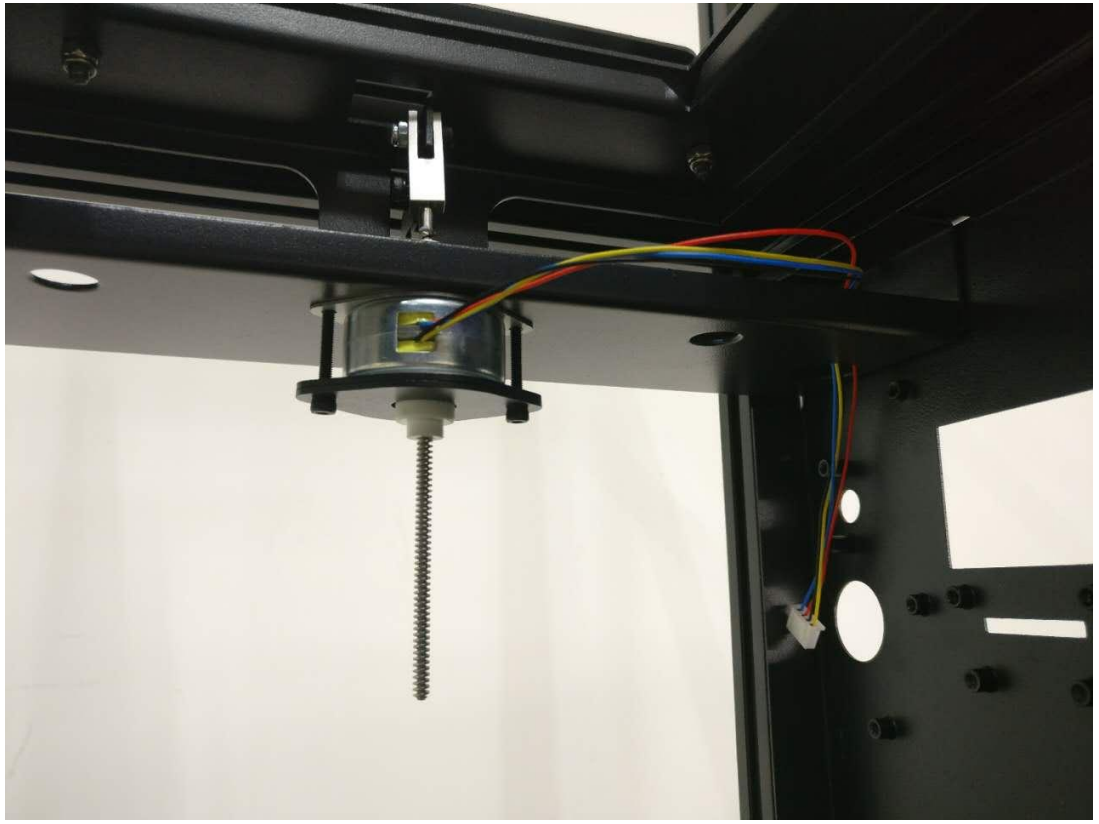

Find the Platform Cover, use 2 CH M3-6 to secure to Z-Axis
Use 4 CH M3-20 to secure to Left and Right frame, 2 on each side. (Do not over tighten these 4 screws, when the screw

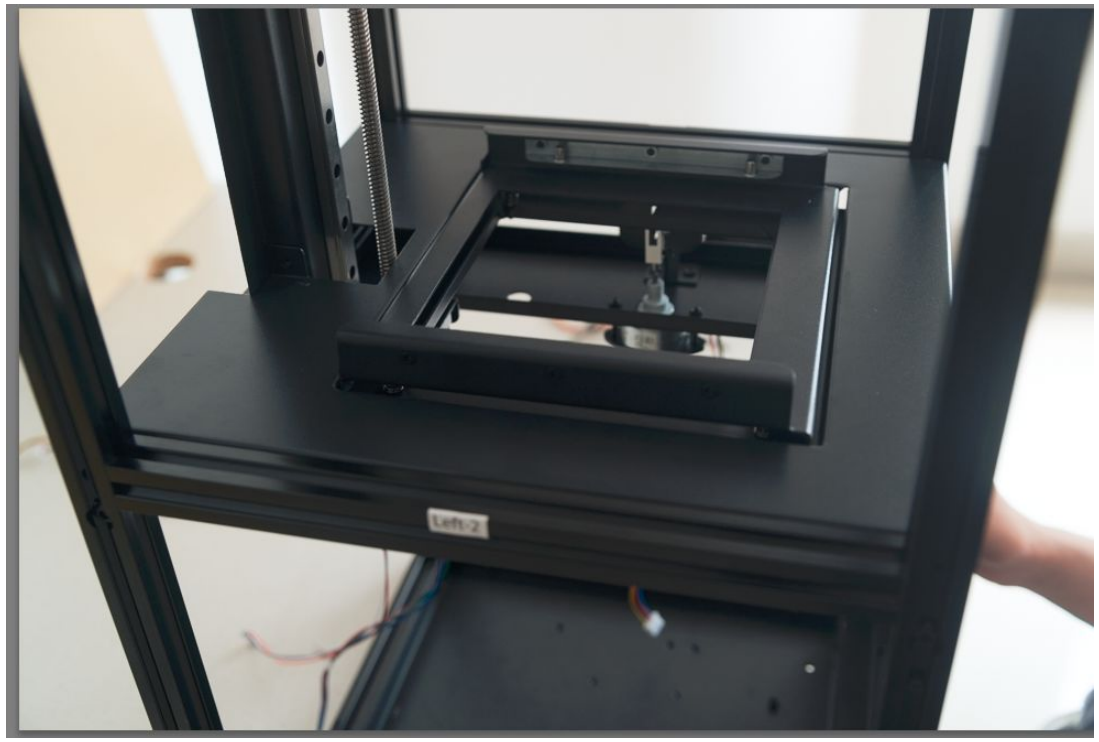

This is also a good time to make sure the Platform is centered and not rubbing against Platform Cover. You can adjust the Platform by loosing the screws on the Silver colored brackets on each end of the metal bar.

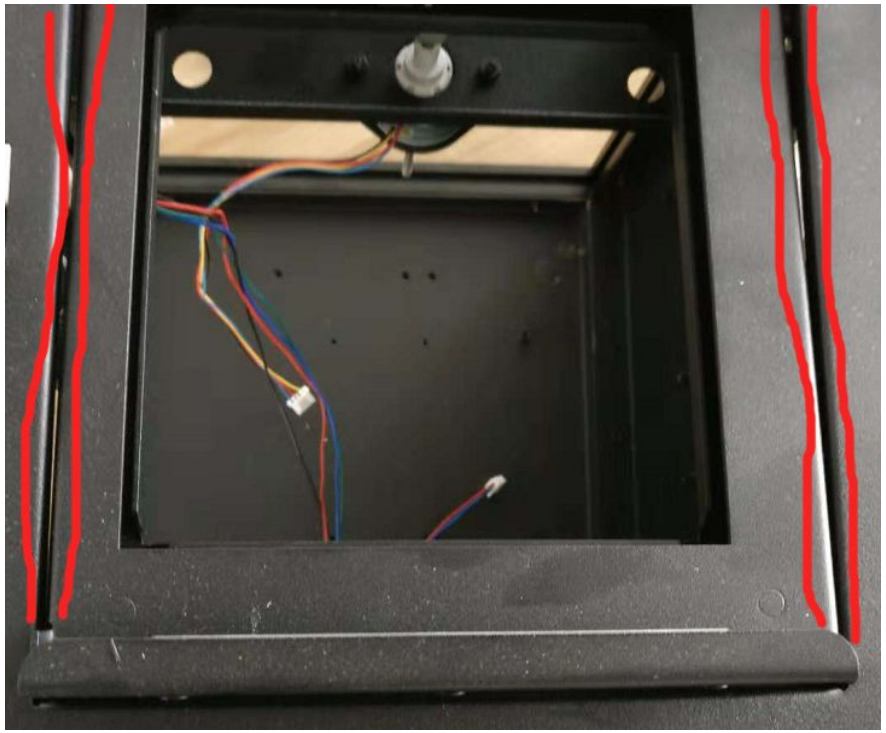

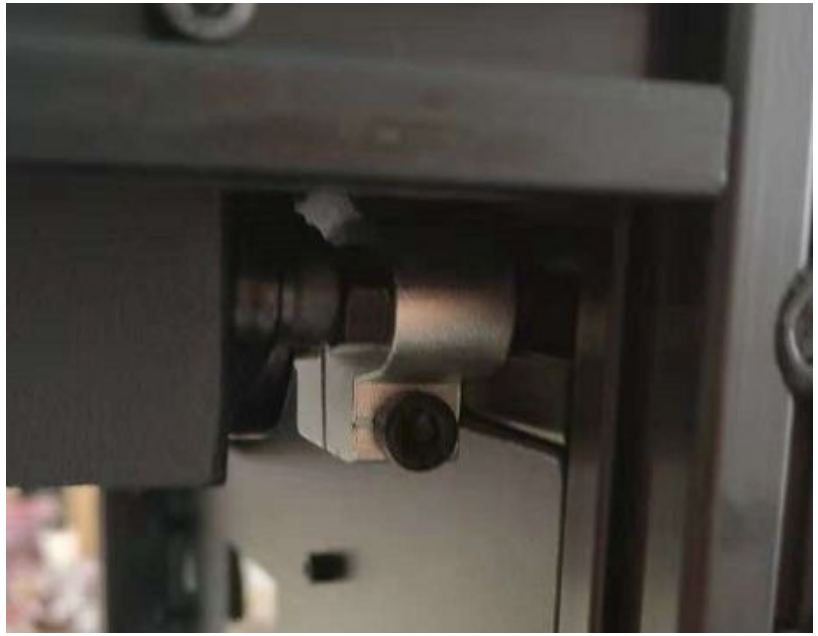

Here is the location of Platform Cover with respect to Moai

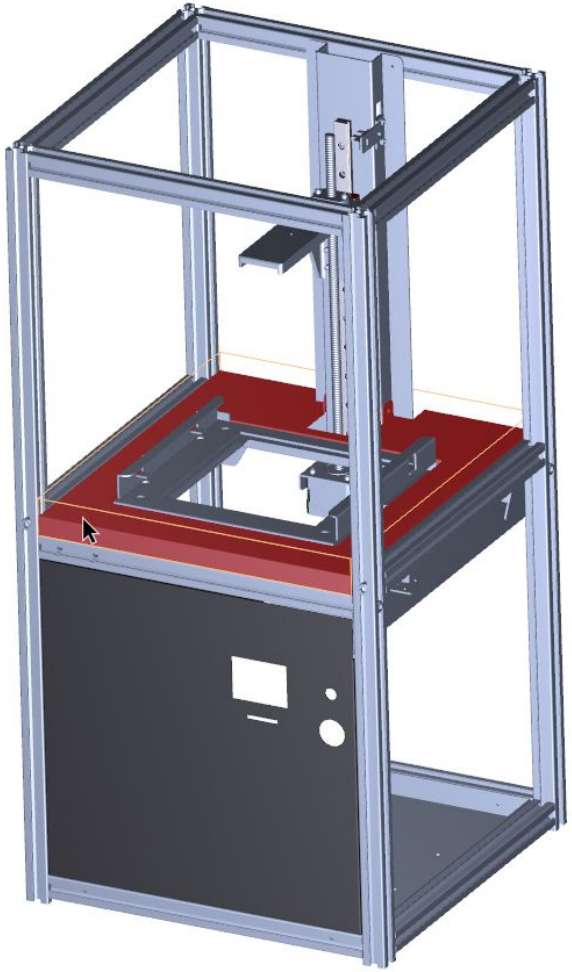

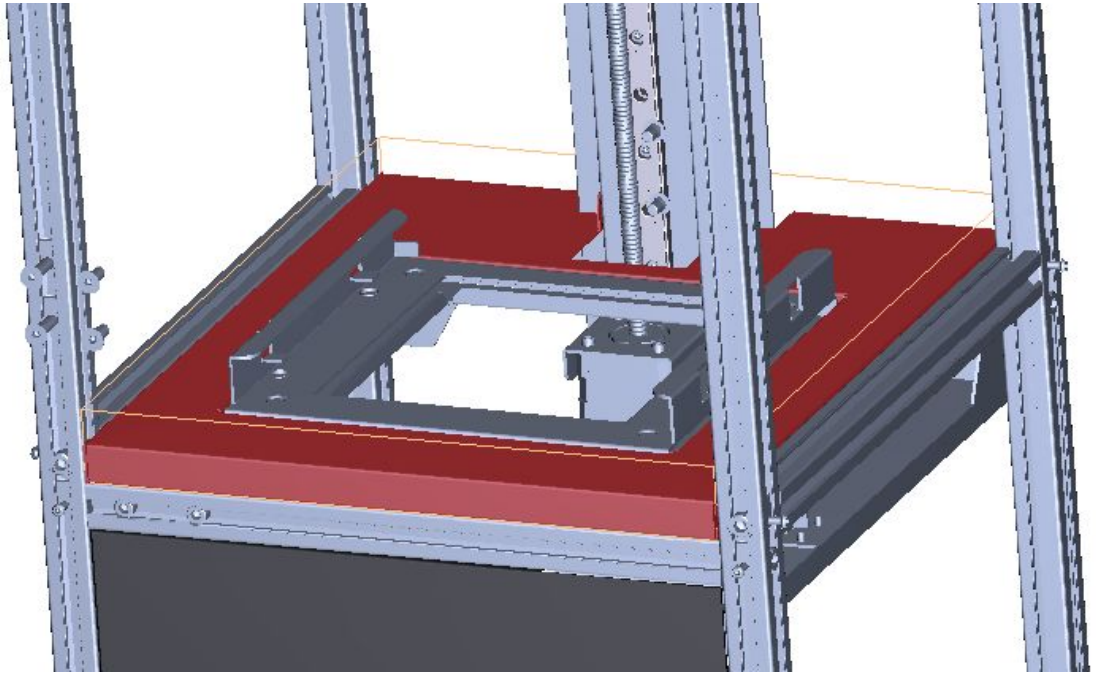

Electronics

Instruction starts next page.

You can use Video Tutorial Part6 to help

Now install Galvo Driver on the bottom panel. Secure with BH M4-6 Near the Right frame side

Each Galvo Driver is designed for a specific Galvo. Look for the label on the Galvo Power port for indication. <u>This is a common area where user make mistake</u>

Example: HT-Yxxxx is for Y-Galvo and vice versa

the boards are the same on the front, and the assemblies have a X or Y label on the back.

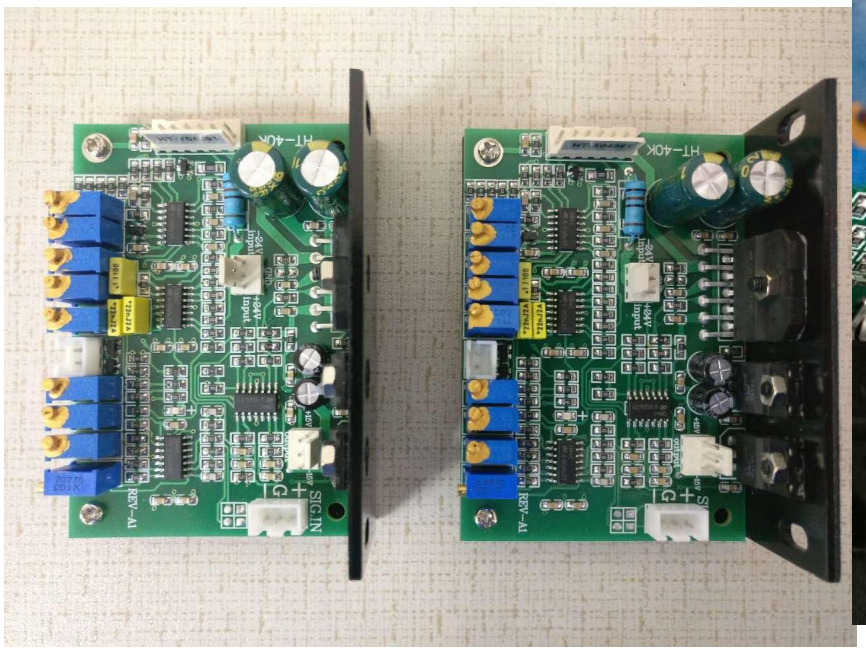

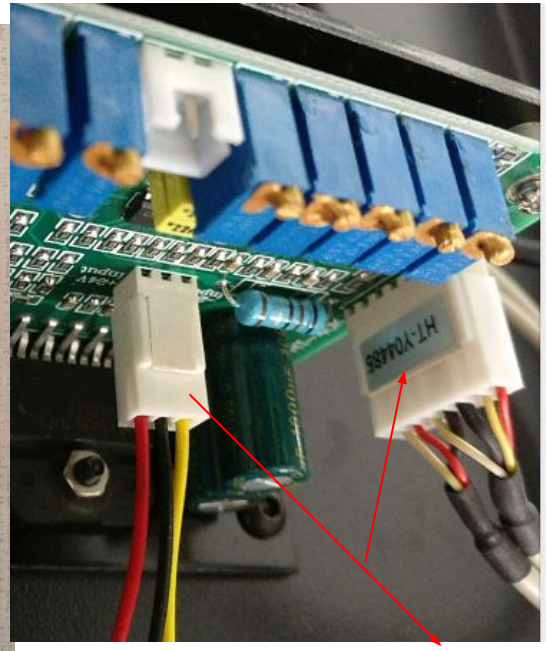

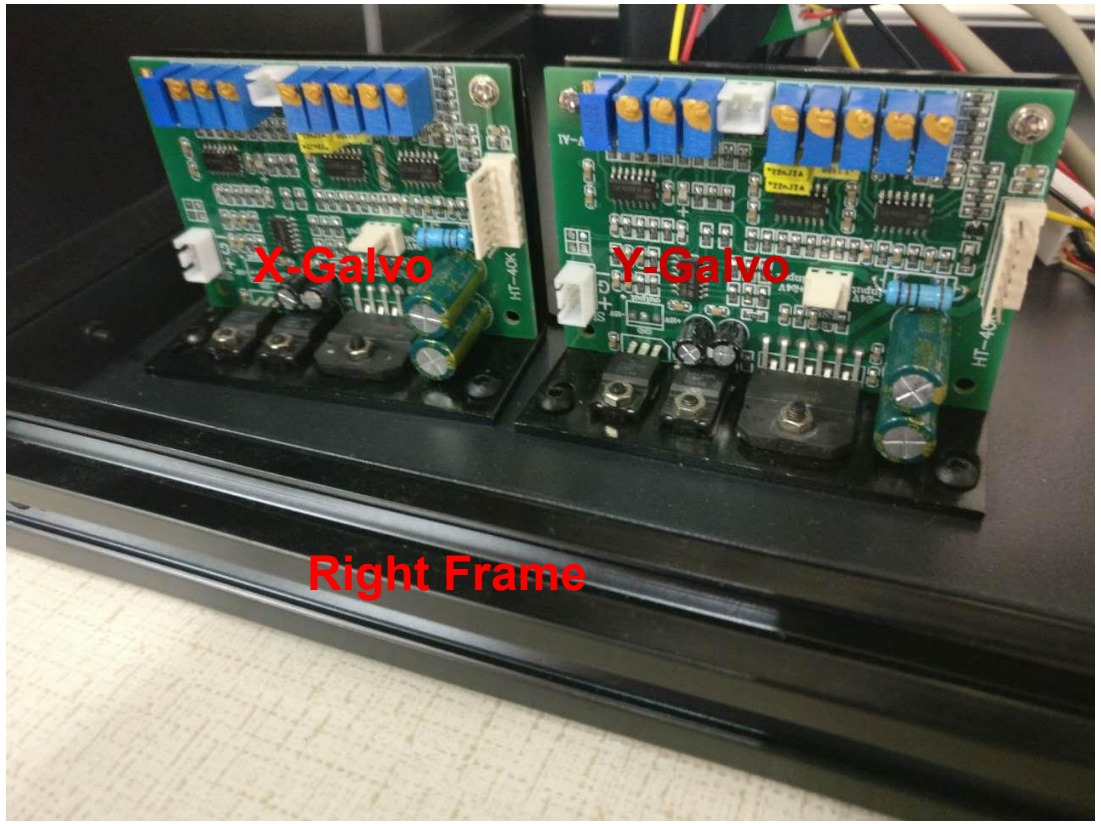

Here is the location of Galvo Driver with respect to Moai

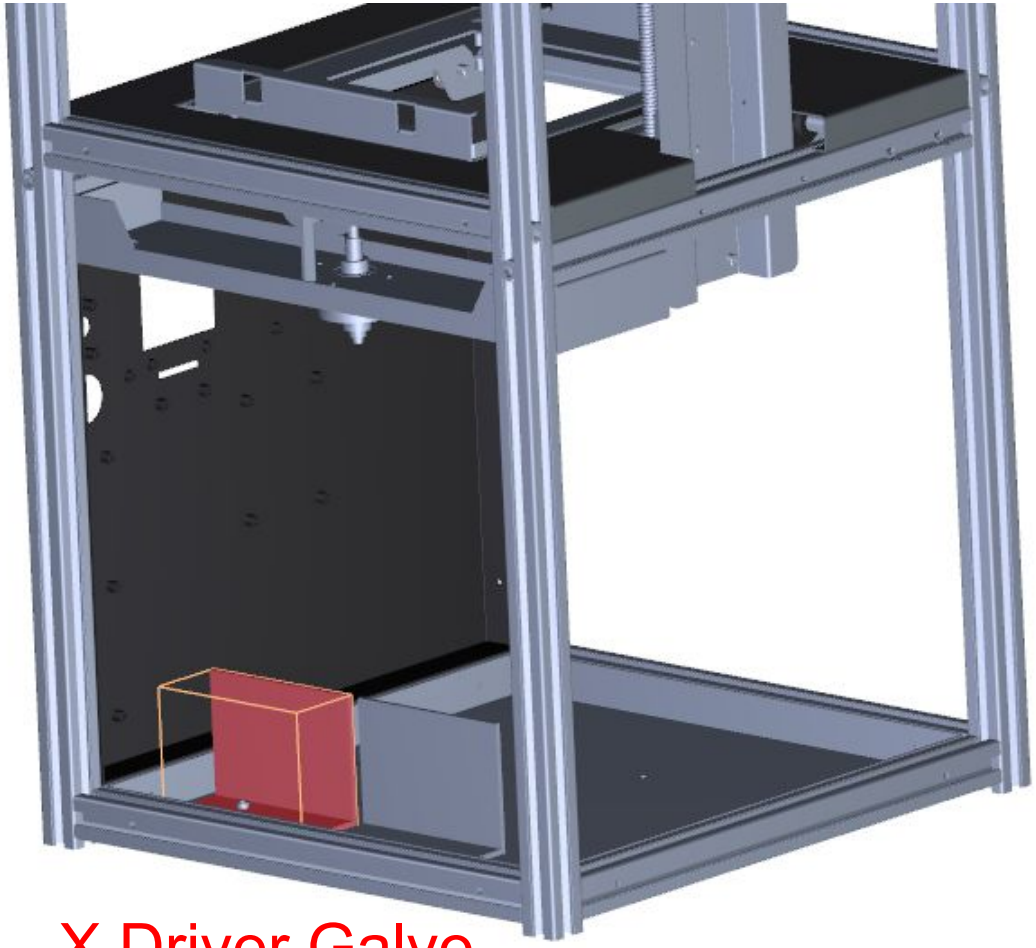

X Driver Galvo

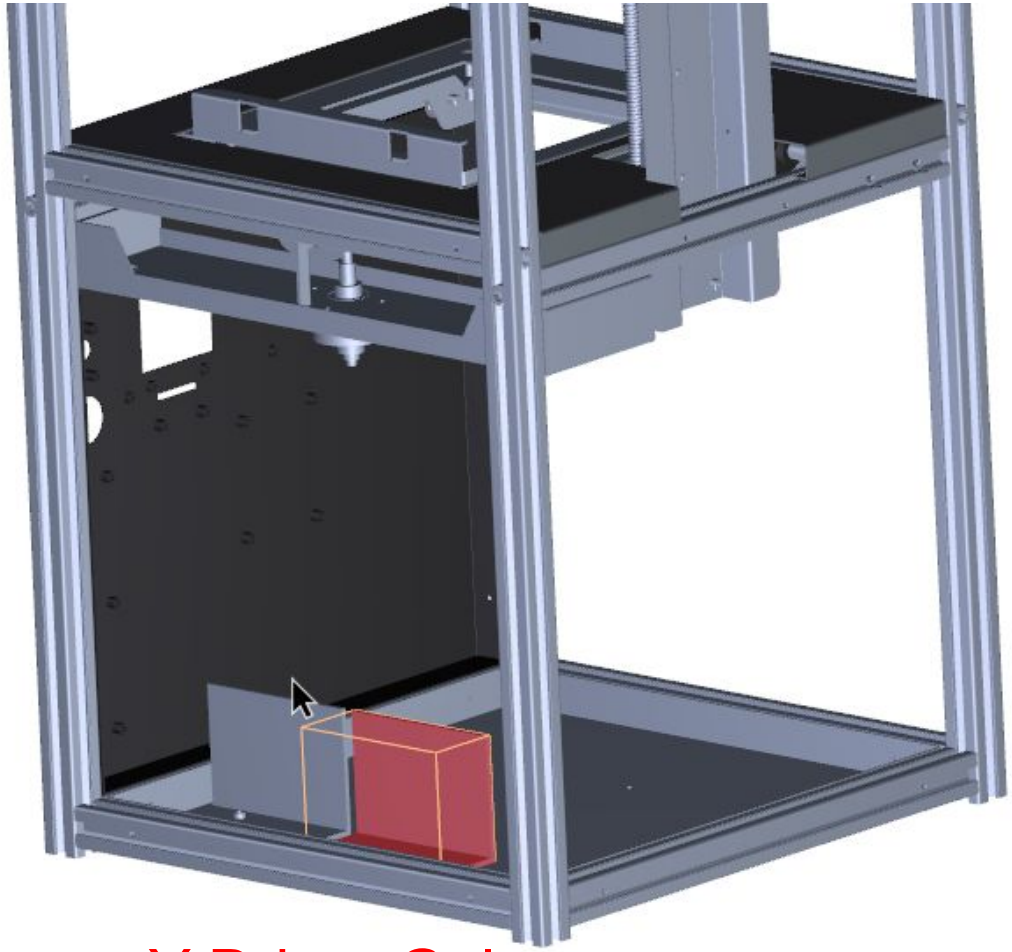

Y Driver Galvo

Lay the system down with Front Panel facing downward Install the Main Board
use CH M3-5 screws to tighten them. Make sure you **remove the protective screen film** before installing the board.
here is a bigger picture of how all boards are next to each other. Top of picture is the riser and z-axis motor:
https://drive.google.com/open?id=0Bzke6lBHG_z5dm5RdDdJTHRRMDQ

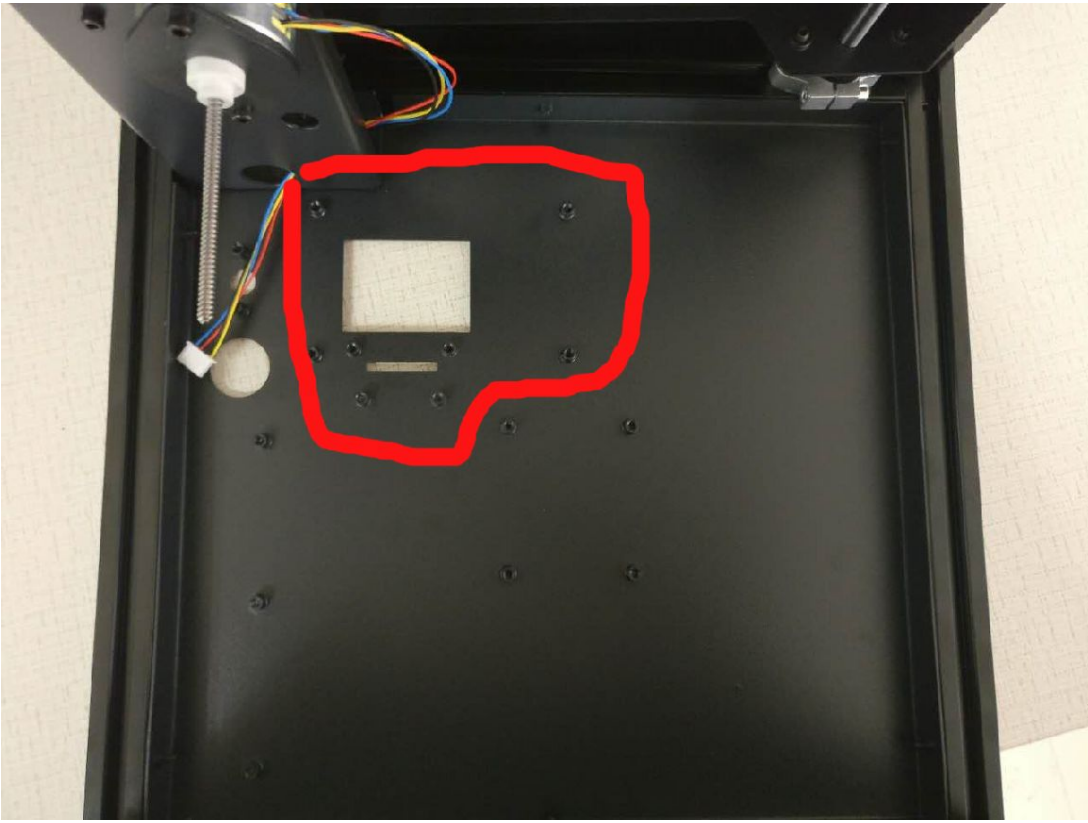

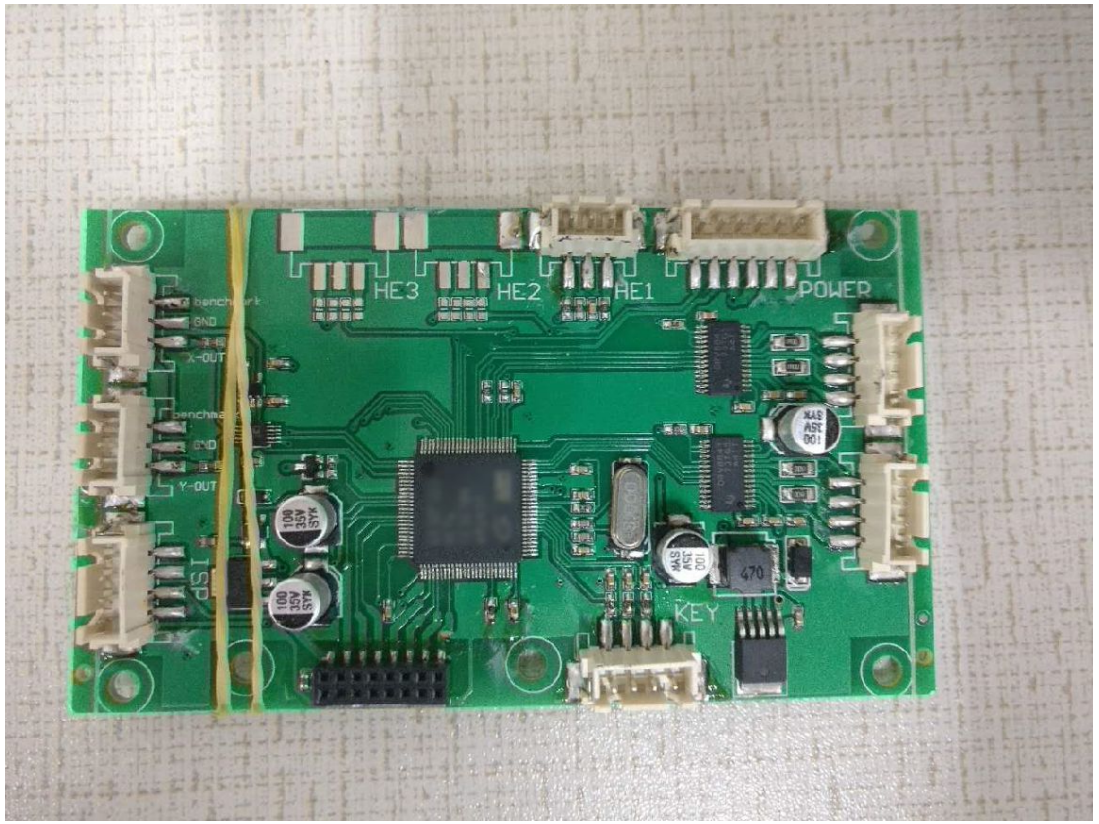

Here is the location of Main Board with respect to Moai

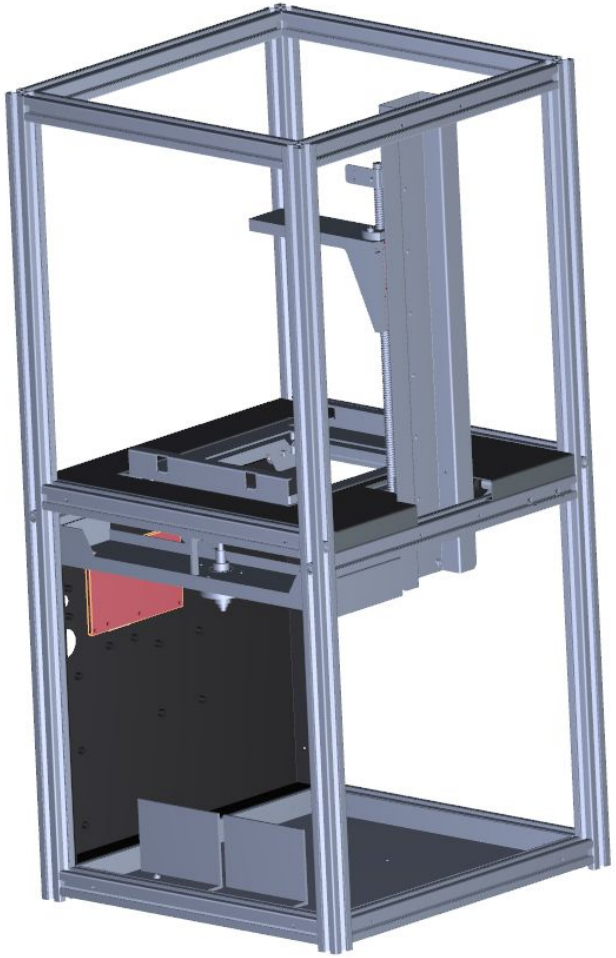

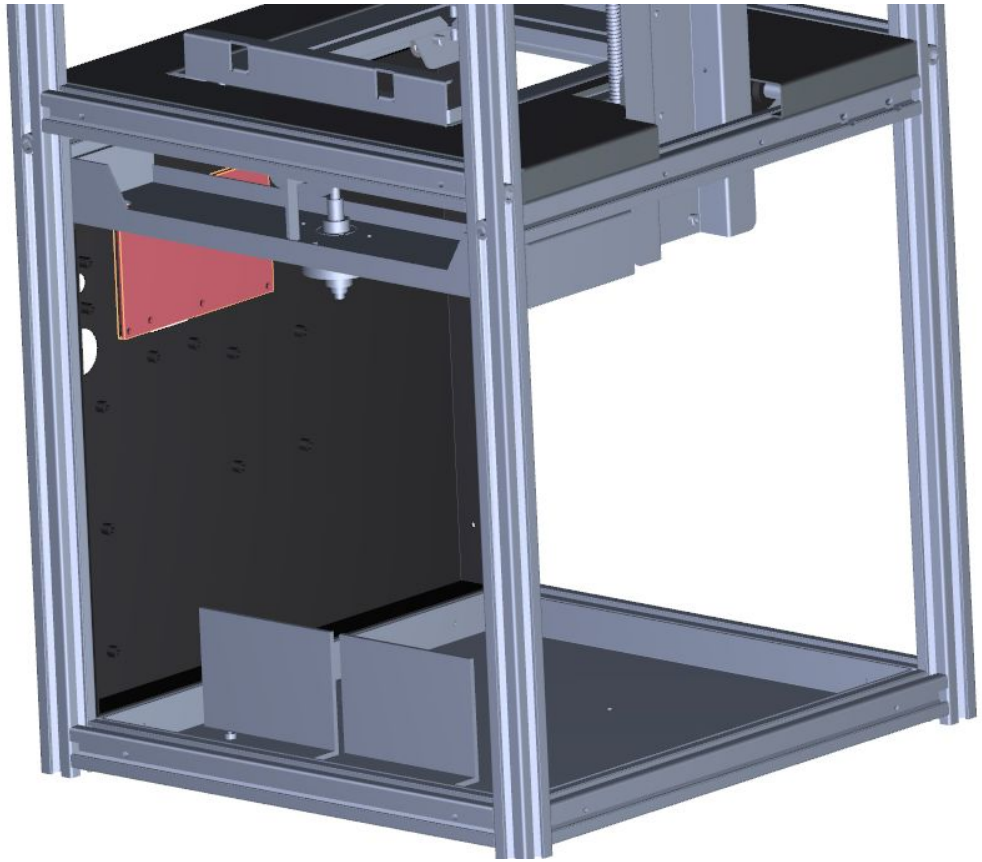

Install the SD card reader with an included metal plate. Secure with 4 CH M3-5 screws. The plug the SD reader with the plat on the main board and secure the plate with 2 CH M3-5 screws

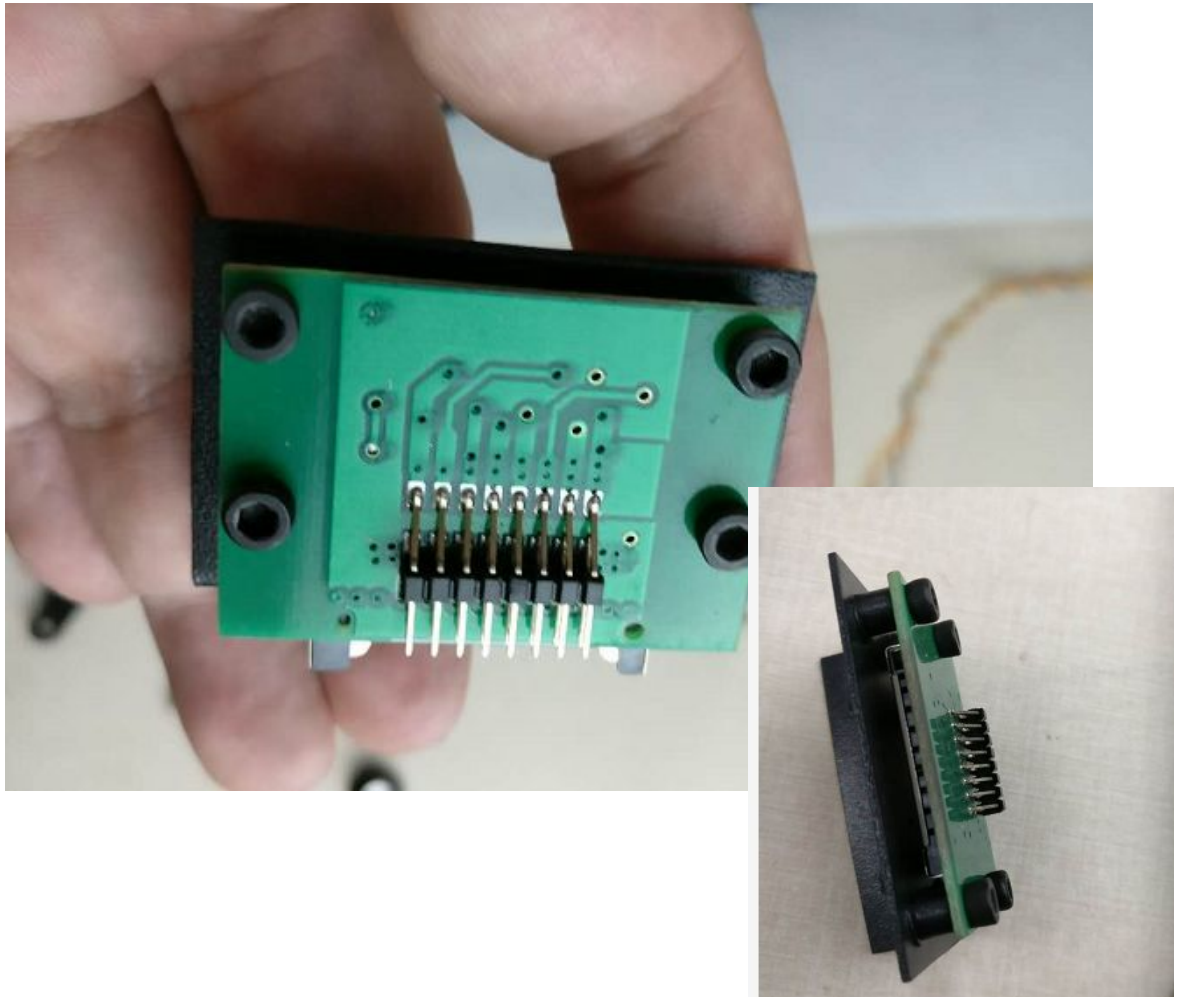

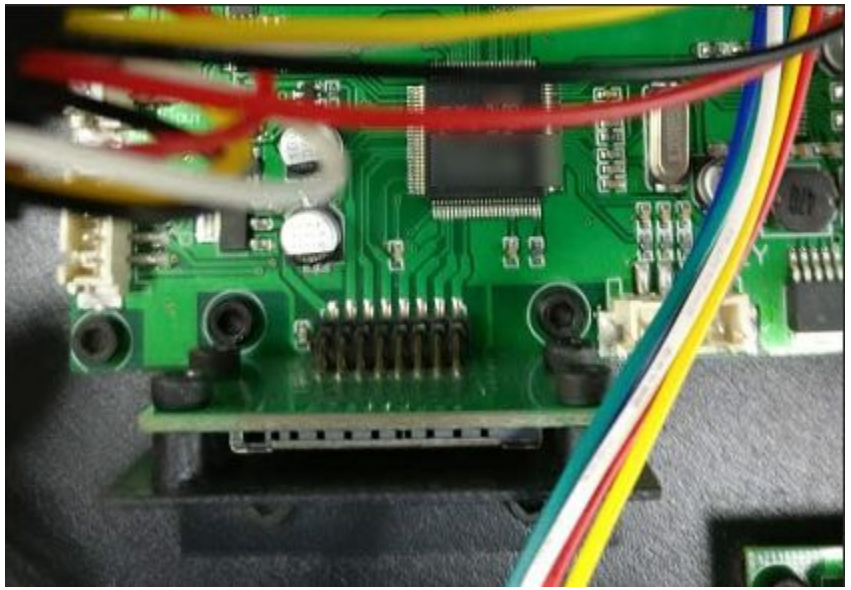

Secure the Power Board (lower right picture). Both using CH M3-5 screws here is a bigger picture of how all boards are next to each other. Top of picture is the Riser and Z-Axis motor:
https://drive.google.com/open?id=0Bzke6lBHG_z5dm5RdDdJTHRRMDQ (Reshoot)

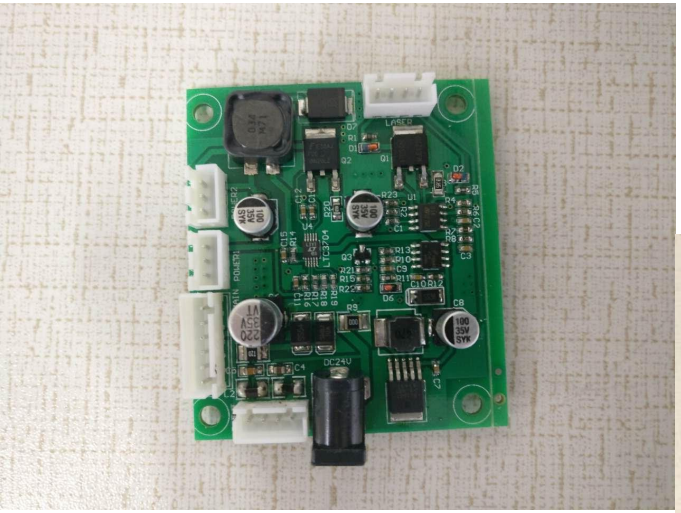

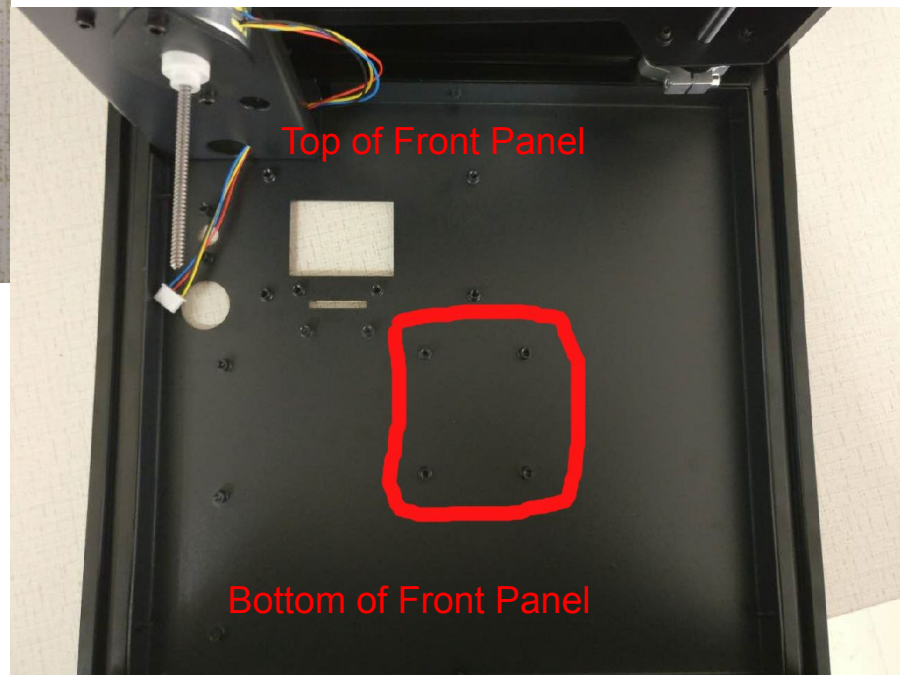

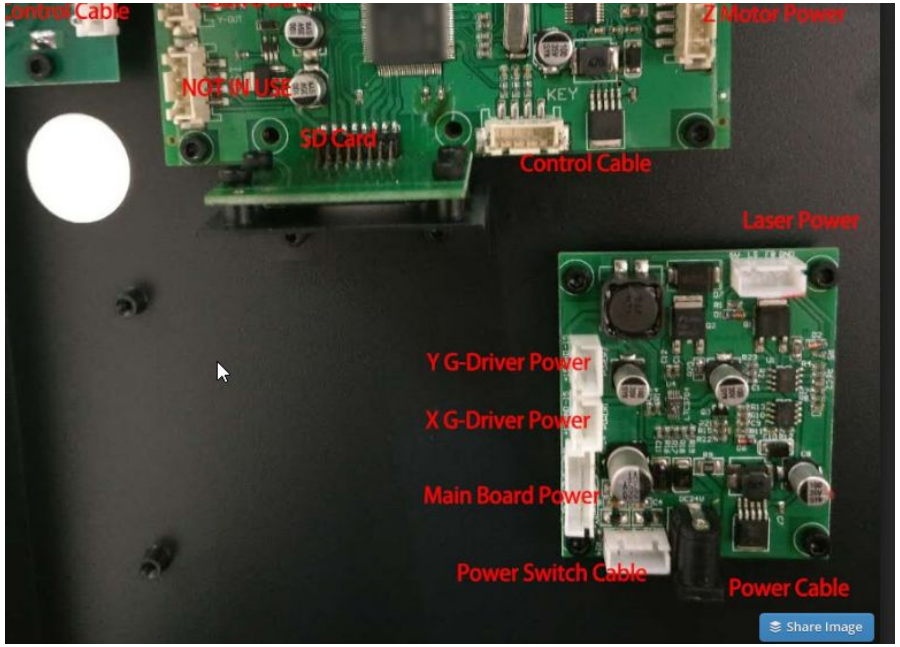

Here is the location of Power Board with respect to Moai

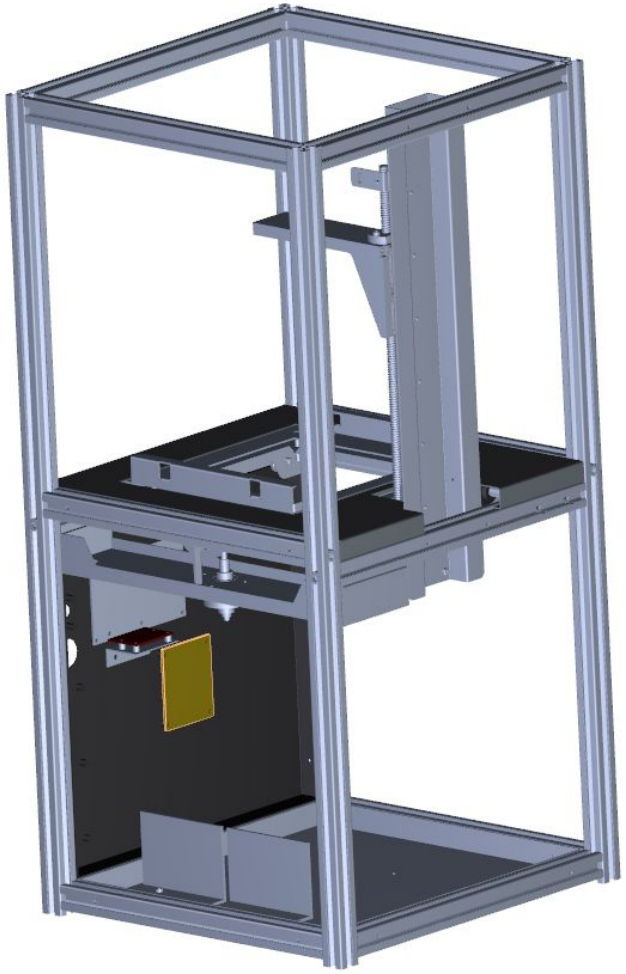

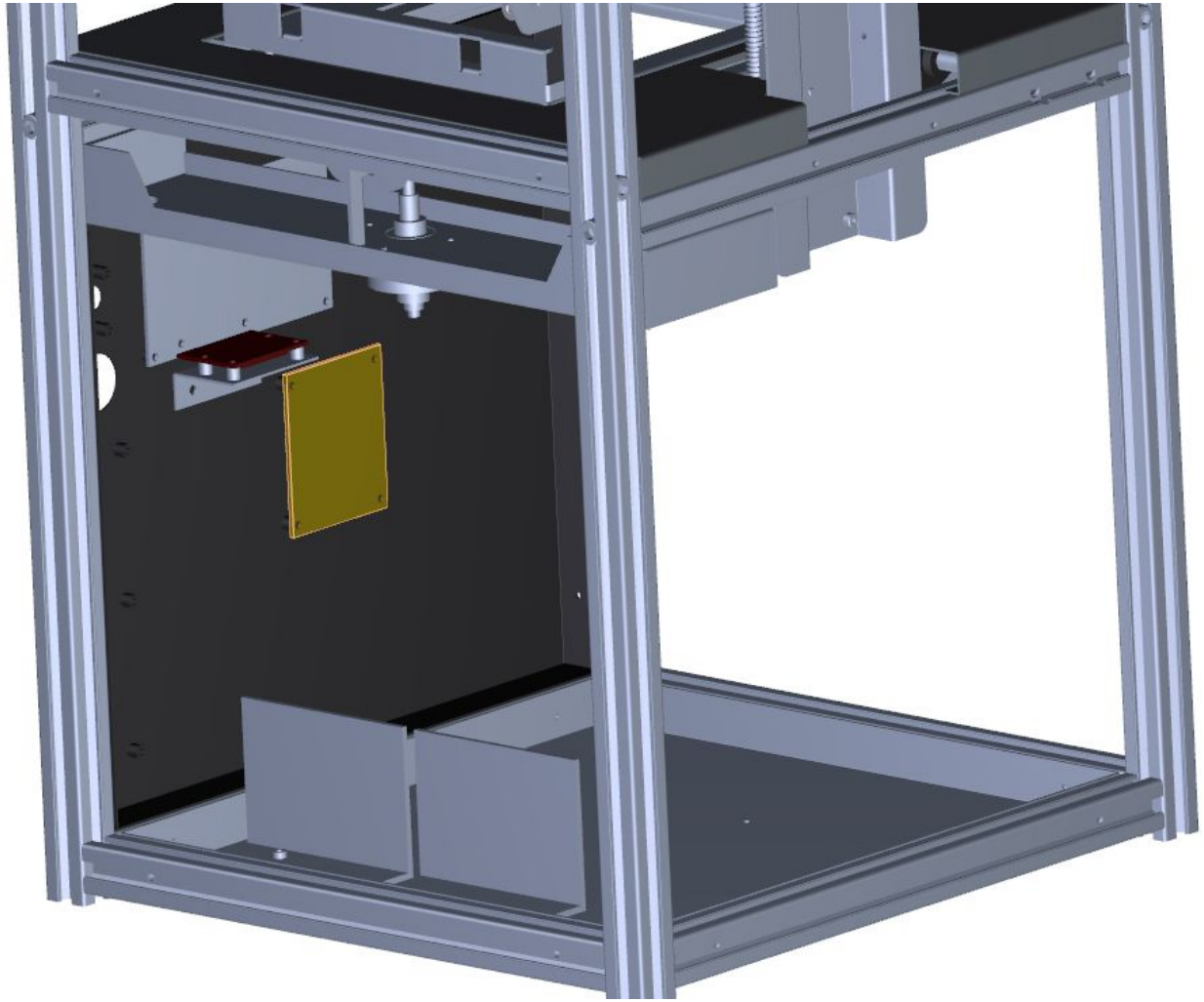

Secure the Power Board (lower left picture) and knob control (lower right). Both using CH M3-5 screws
here is a bigger picture of how all boards are next to each other. Top of picture is the riser and z-axis motor:
https://drive.google.com/open?id=0Bzke6lBHG_z5dm5RdDdJTHRRMDQ (Reshoot)
For electronic installtion, you can view video:
https://www.youtube.com/watch?v=i9Qfwfzho98

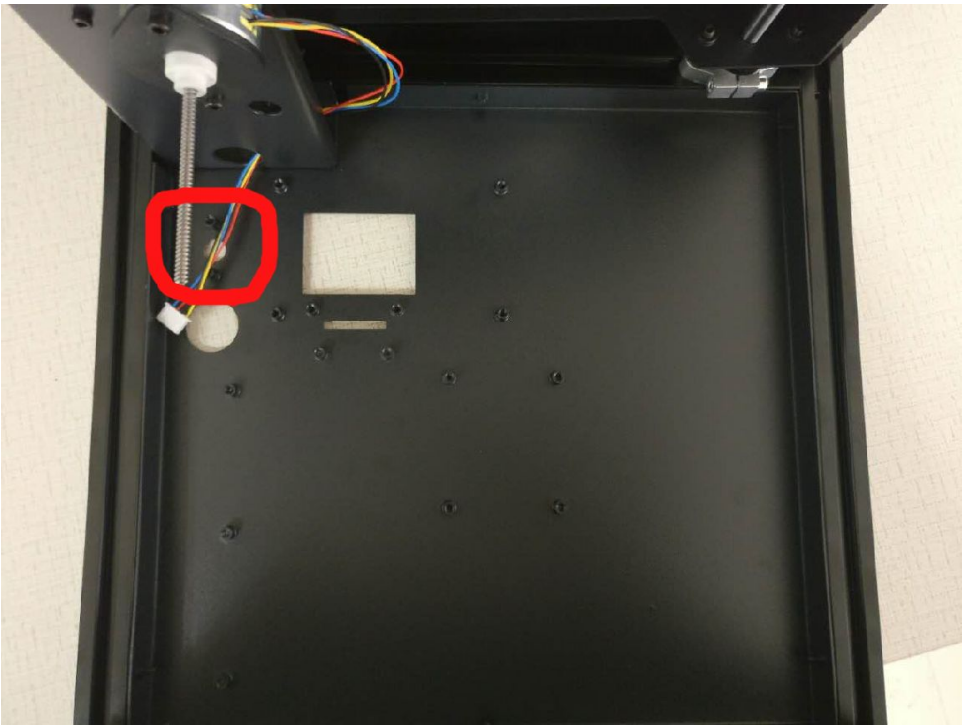

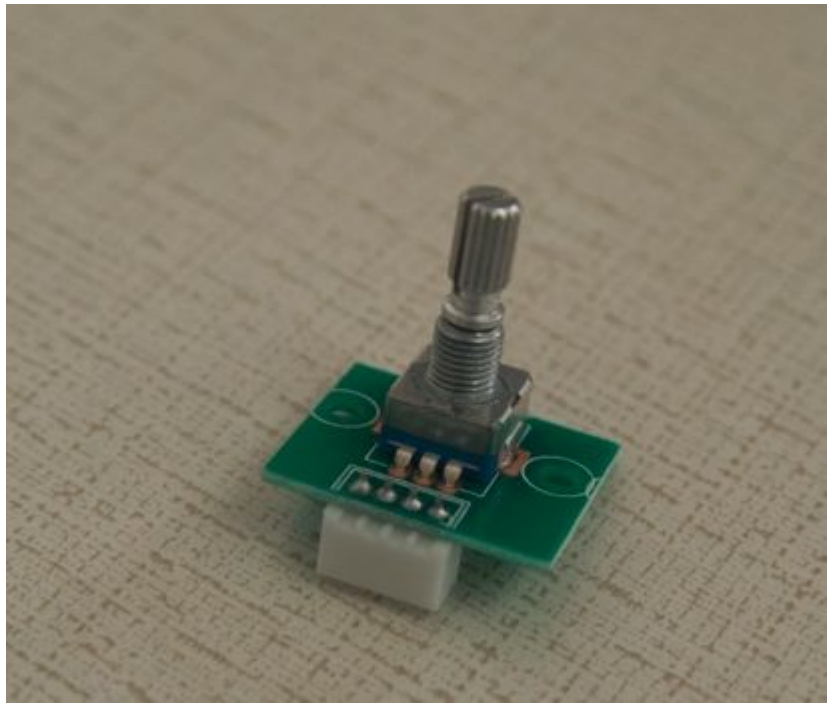

Locate the galvo/laser fixture packaging and carefully remove it. The unlock the metal protector on the top after it is installed on the main board

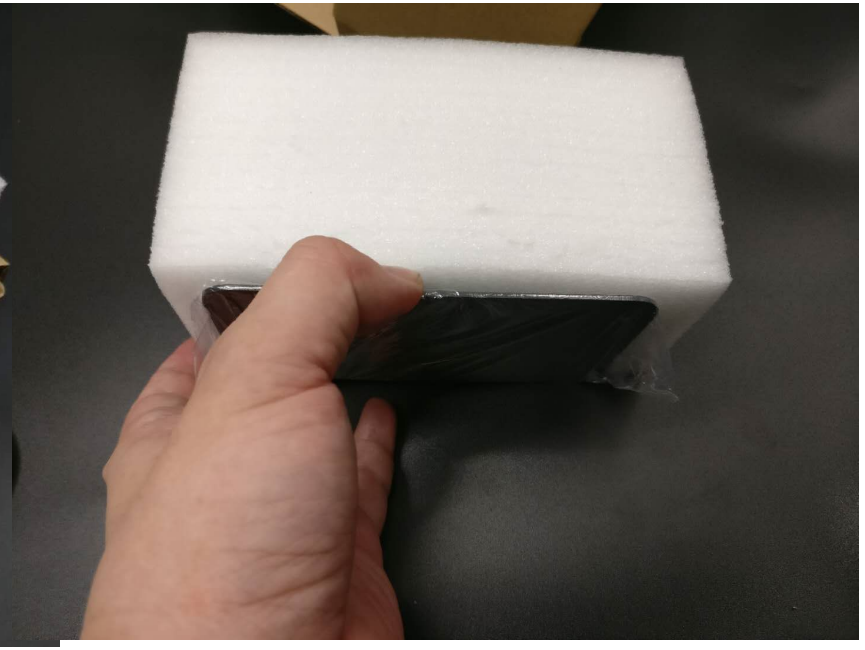

Remove the metal protective cover using M3 screws.

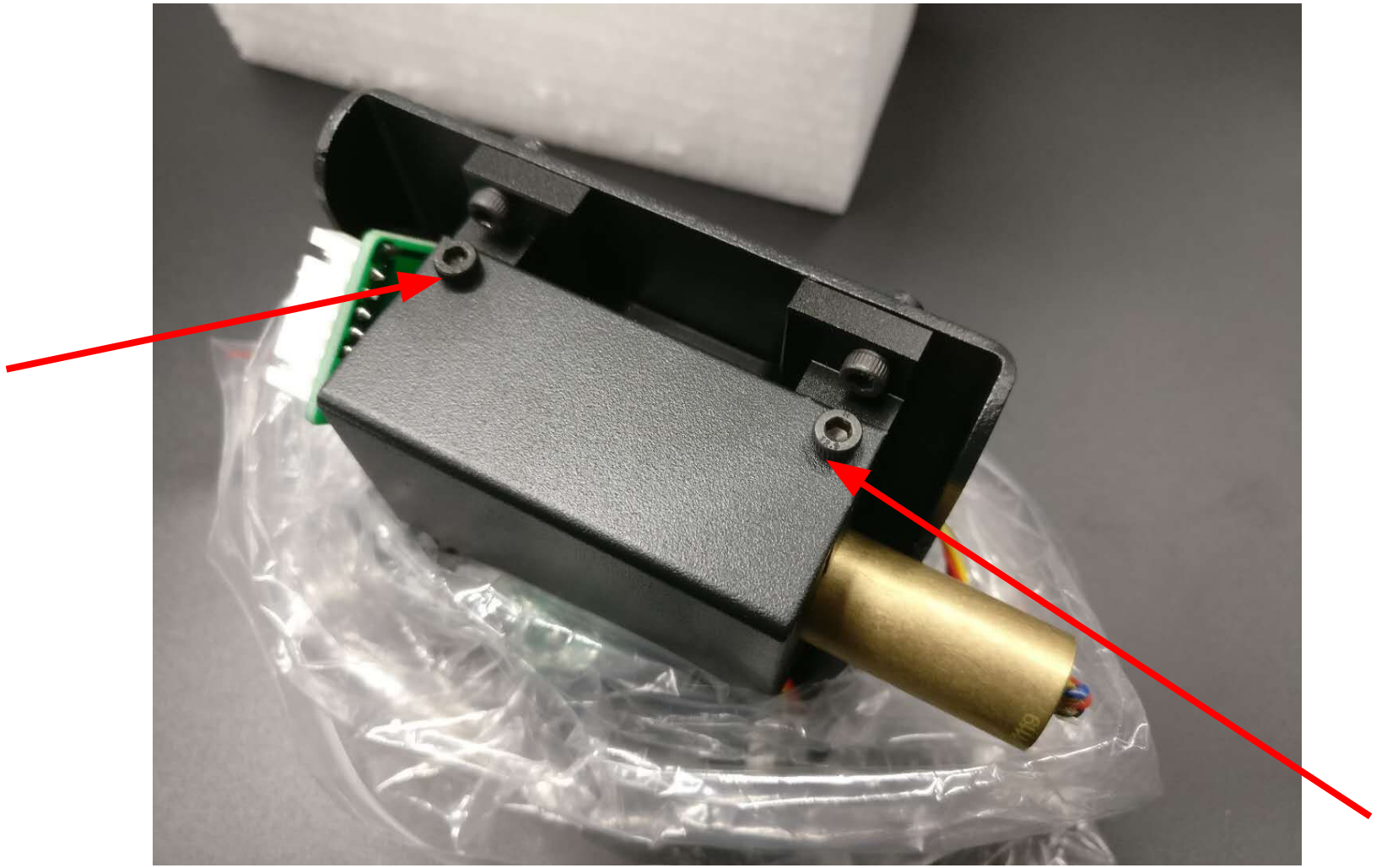

Here is the location of Power Board with respect to Moai

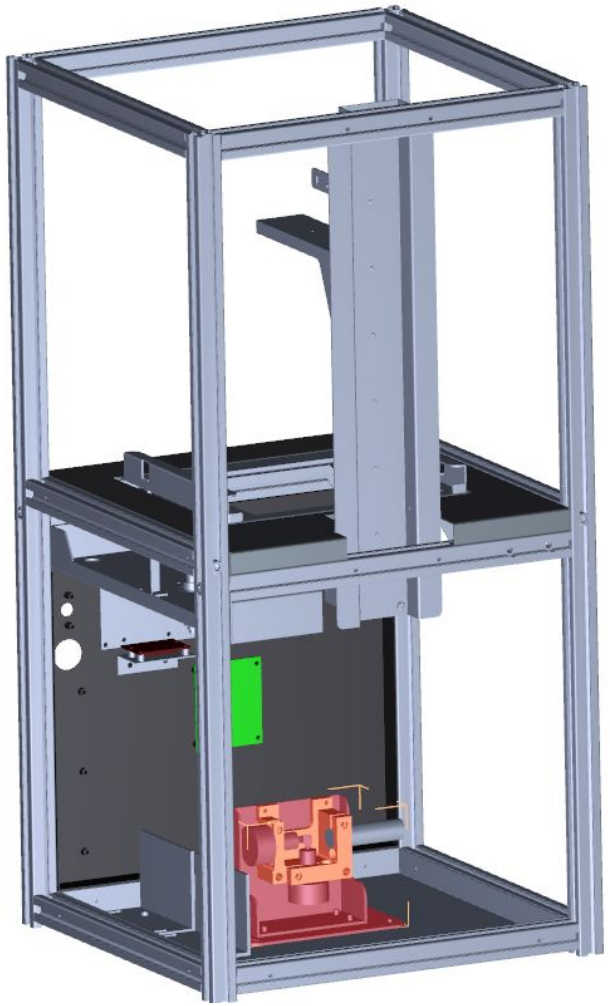

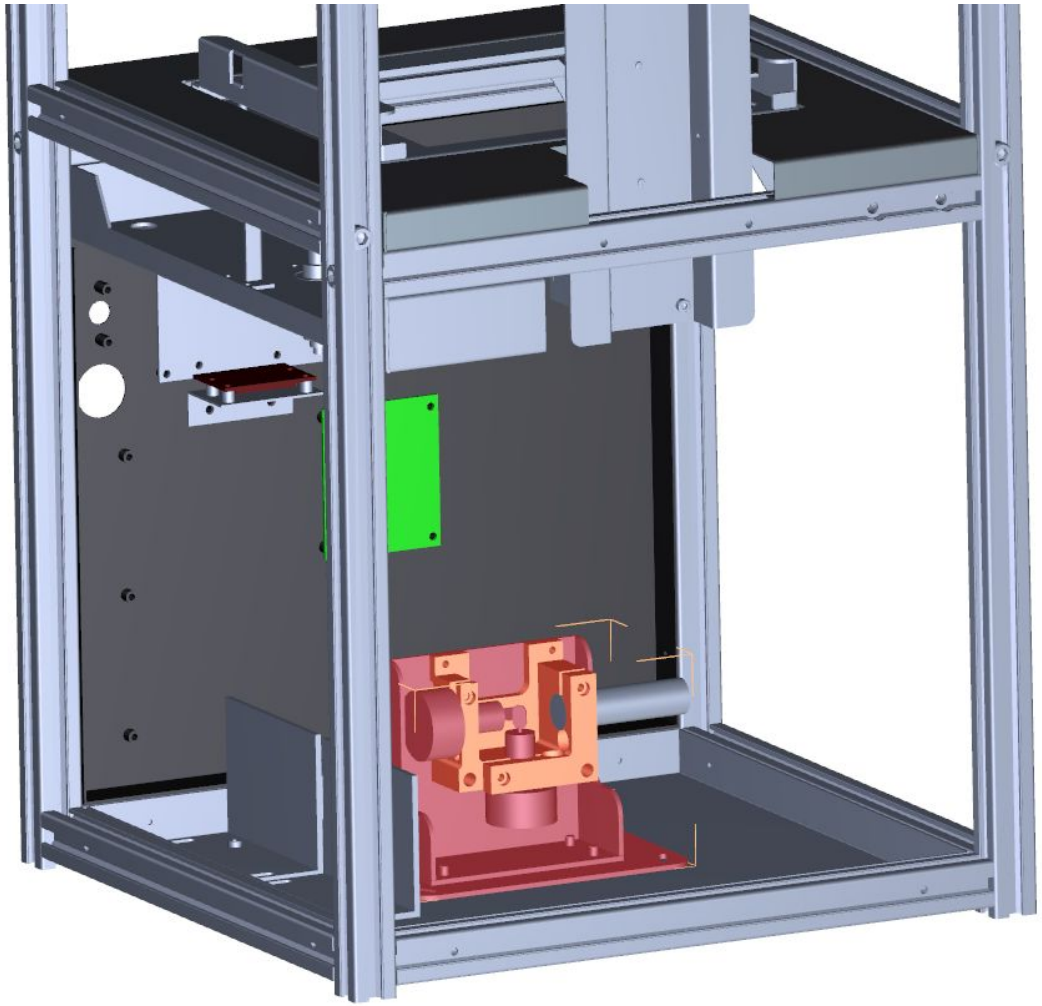

First connect the Galvo Power Cables to the X/Y Galvos on the Fixture and then install Laser / Galvo set on the bottom panel. Use 4 CH M3-6 to Secure the Fixture

DO NOT TOUCH GALVO MIRROR or LASER FRONT ELEMENT

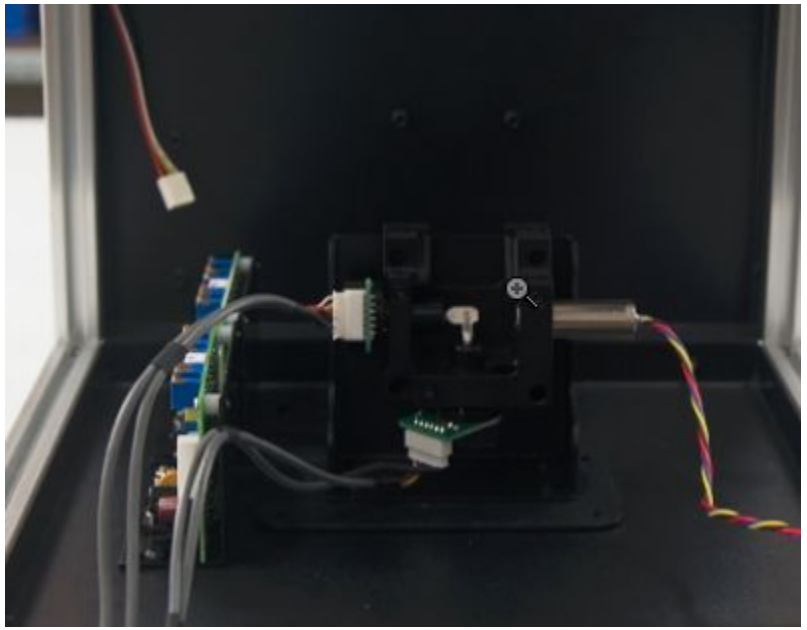

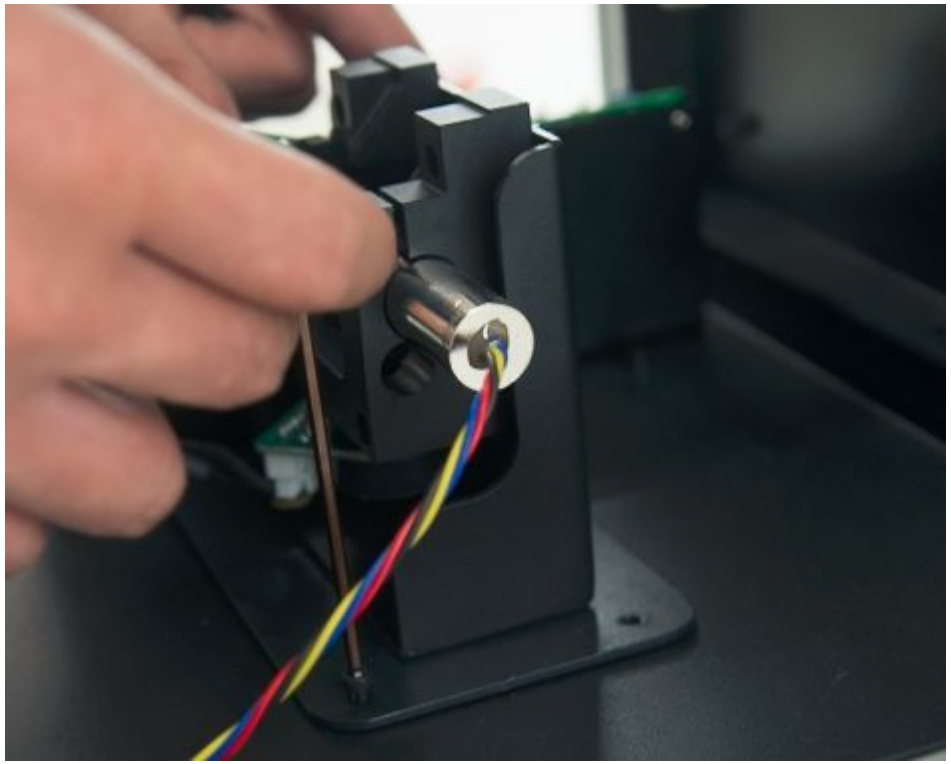

Cabling:

All cables have labels on them

The connection can be made by looking at below pics and match the port name to the cable label

Diagram: needs update
board picture reference: https://drive.google.com/open?id=0Bzke6lBHG_z5VWd2ZG1yQ182WE0
Driver picture reference: https://drive.google.com/open?id=0Bzke6lBHG_z5a1Ntek5tMUozNmM
Laser/Galvo picture reference: https://drive.google.com/open?id=0Bzke6lBHG_z5V1RuM2dsNDFUYmM

Connection Diagram click here to download

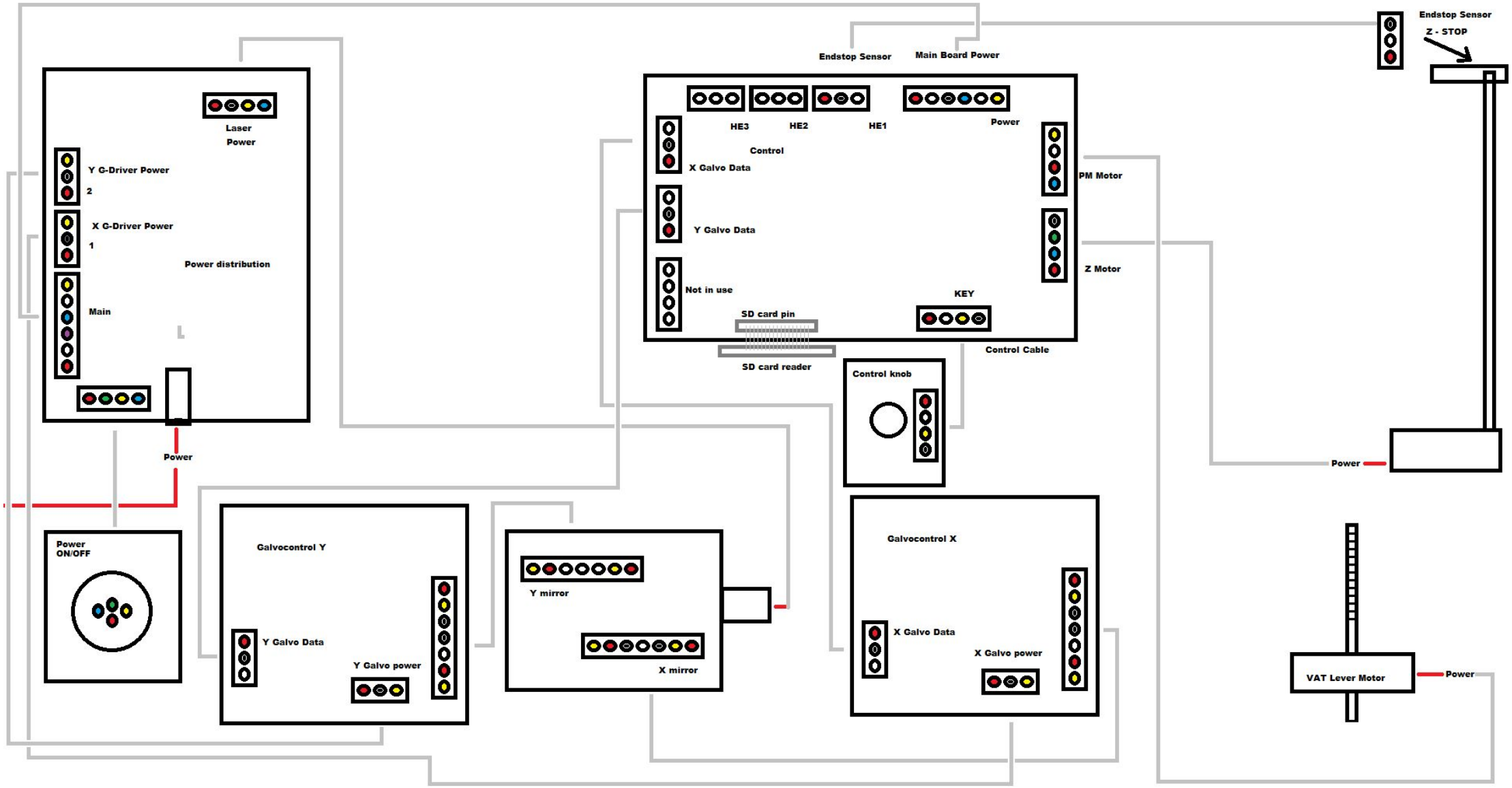

Einar Petersen - 21-10-2018

Common Cable Mistake:

The Endstop Sensor cable port shown is a frequent cable user missed. If user forgot to plug this cable. The power up sequence may damage sensor. Please double check Endstop Sensor and make sure it is correctly installed to the right port.

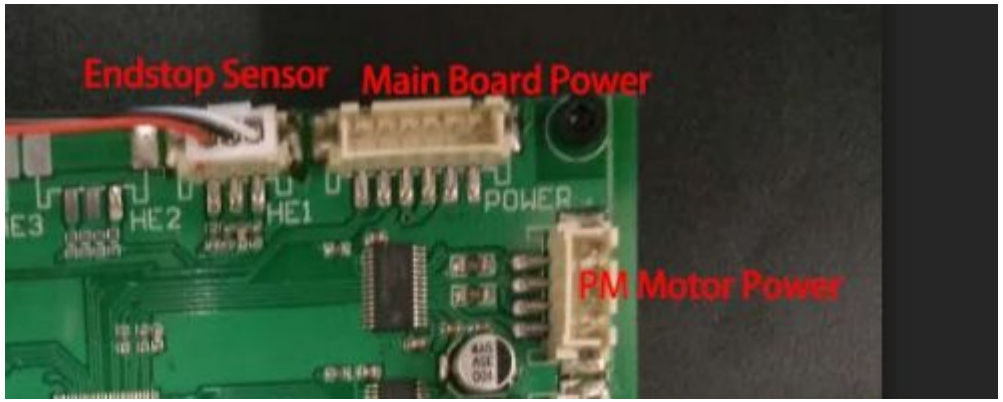

Door,Panels, Misc

Instruction starts next page.

You can use Video Tutorial Part7 to help

Find and install Front Panel, Use 6 BH M3-16 screws to secure

it is probably easiest if you install the top screws first, then the cover will hang from them - and the rest of the holes will be aligned

Here is the location of Front Door with respect to Moai

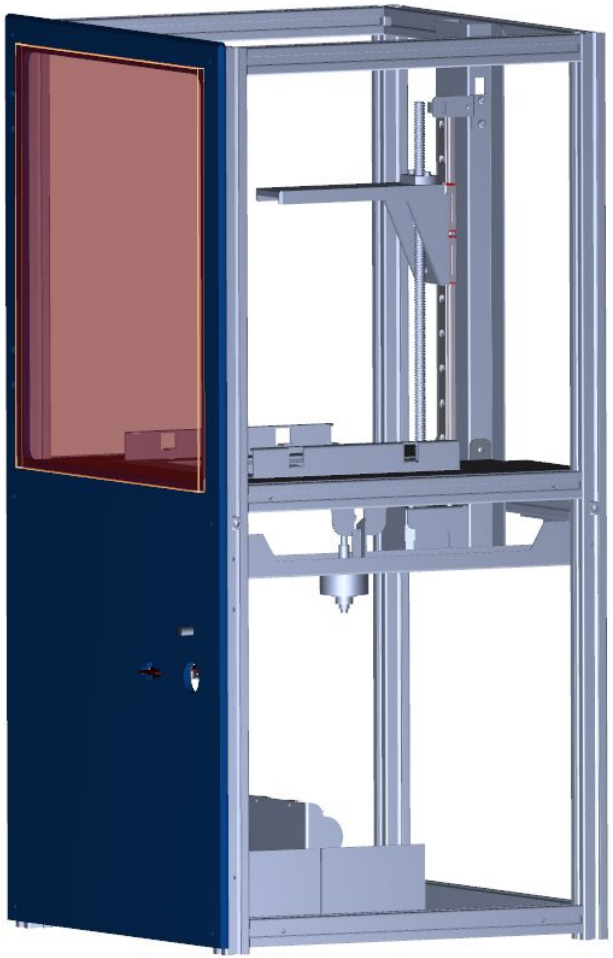

Install Front Door to Front Panel, Find these pieces
Use 4 FH M5x12 on the Door, Use 4 FH M5x25 to secure Door on the Panel

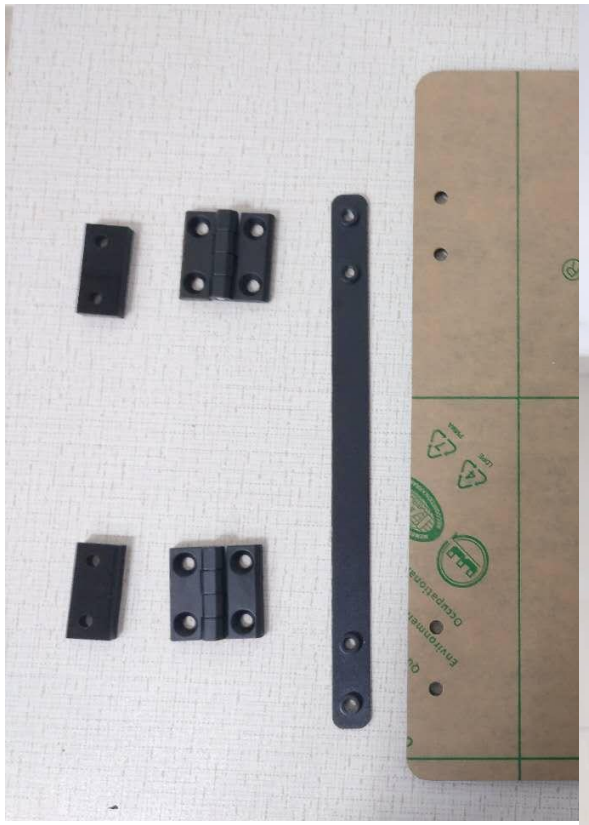

For Door Lock, find the Door Lock Set as seen on the left picture
push the Lock through the hole on the Door Panel from outside in, screw the Ring in from the inside of the panel, put the Lock Arm as seen in the right picture. Then use the Screw to secure the Lock Arm

follow pictures to install Door Handle. Making sure that the larger hole is facing toward the floor before installing the hinge bracket. Use the CH M4x8 to secure the Door handle

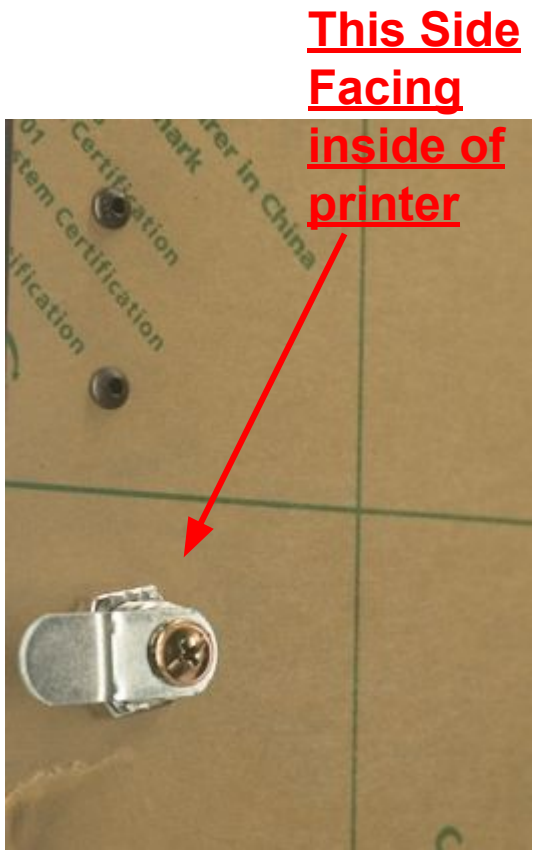

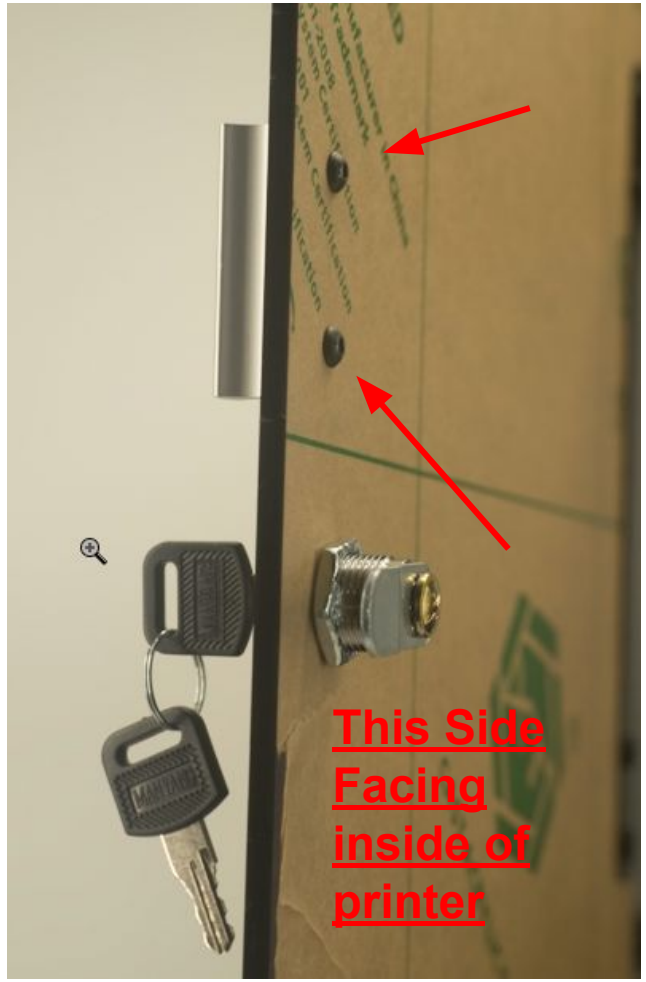

Find Knob Cover
Install Knob Cover to Front Panel, there should be a metal beam sticking out from the Control Unit
We include both Black and Silver knob for your preference

Find Power Switch (See left picture)
There is rubber ring and a metal ring. Remove both before installing

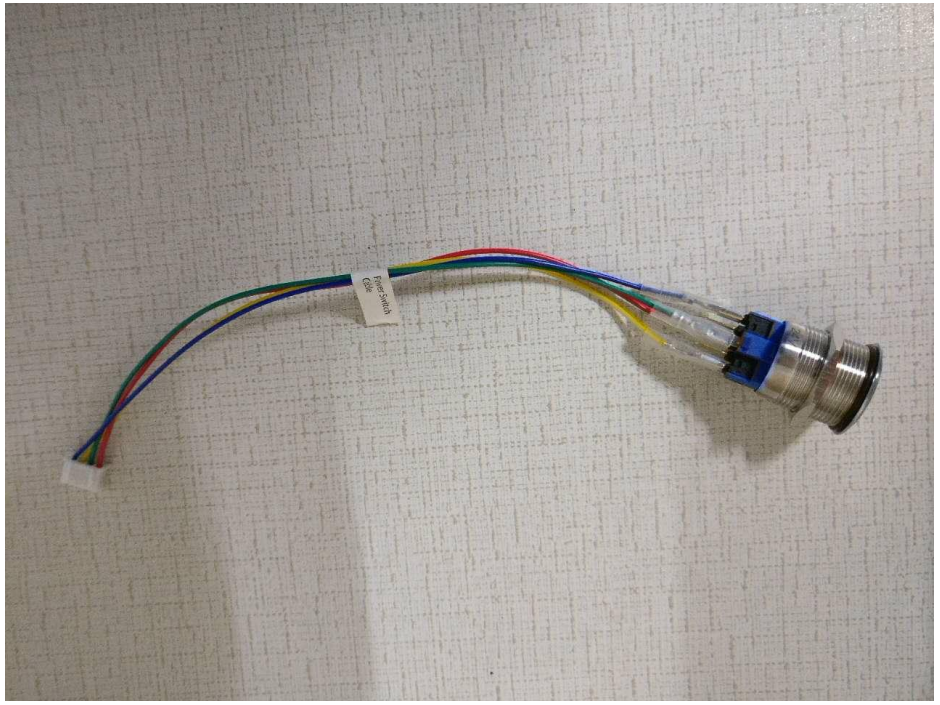

Make sure insert Power Switch with cable through the Front panel holes
Put on rubber ring and then a metal ring. Secure the Power Switch from the back buy put rubber ring all the way in first and tighen the metal ring. Contact the Power Switch Cable to the highlighted port

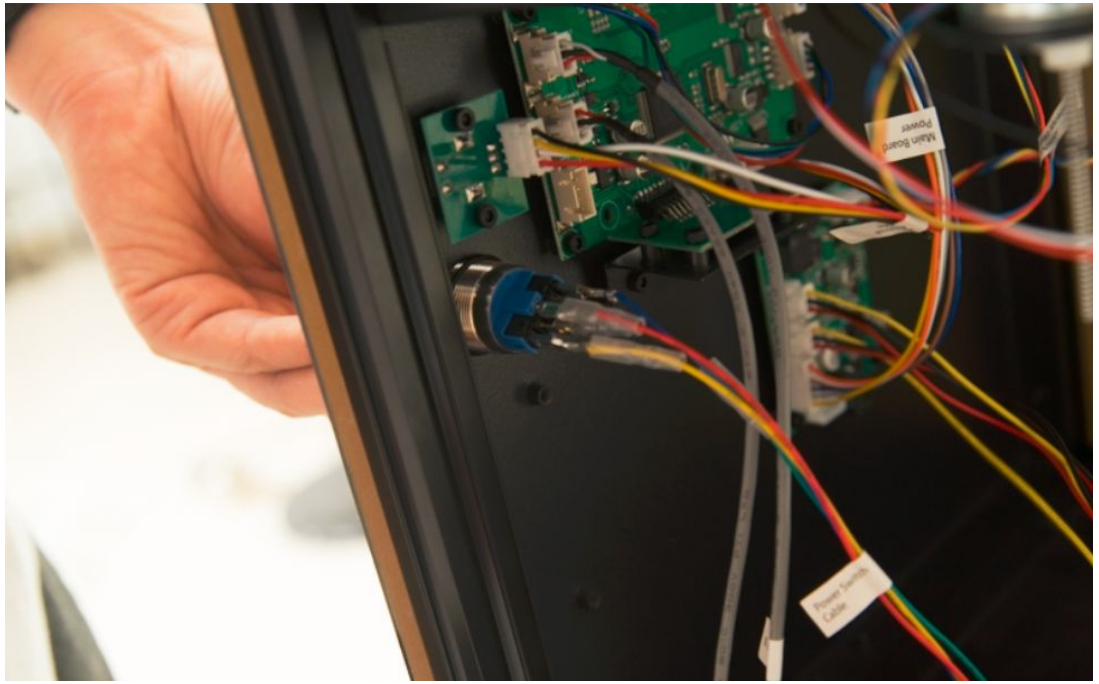

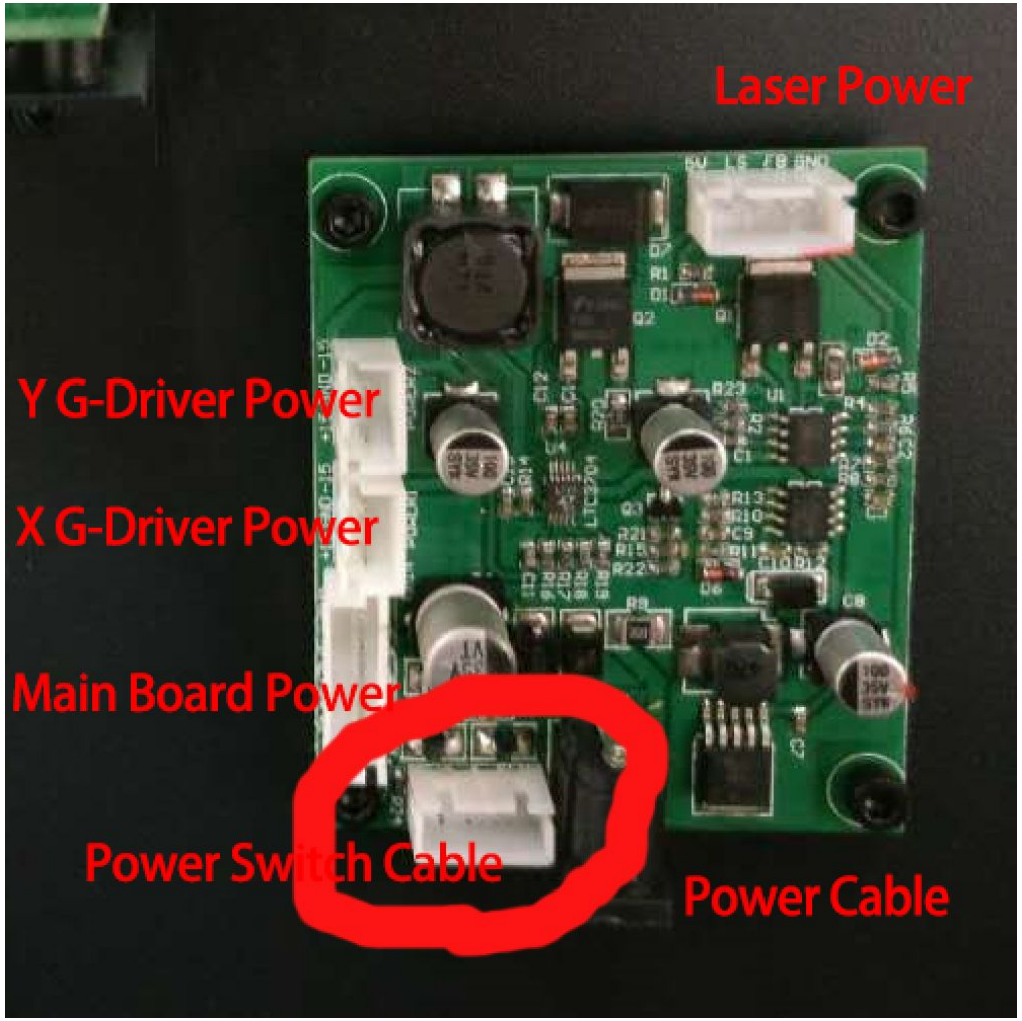

Install Back panel for Back frame, you can Identify it by the hole
Install Power Cable by pull a part of cable thru Back Panel's hole.
Use 6 BH M3-16 screws to secure**
it is probably easiest if you install the top screws first, then the cover will hang from them - and the rest of the holes will be aligned.

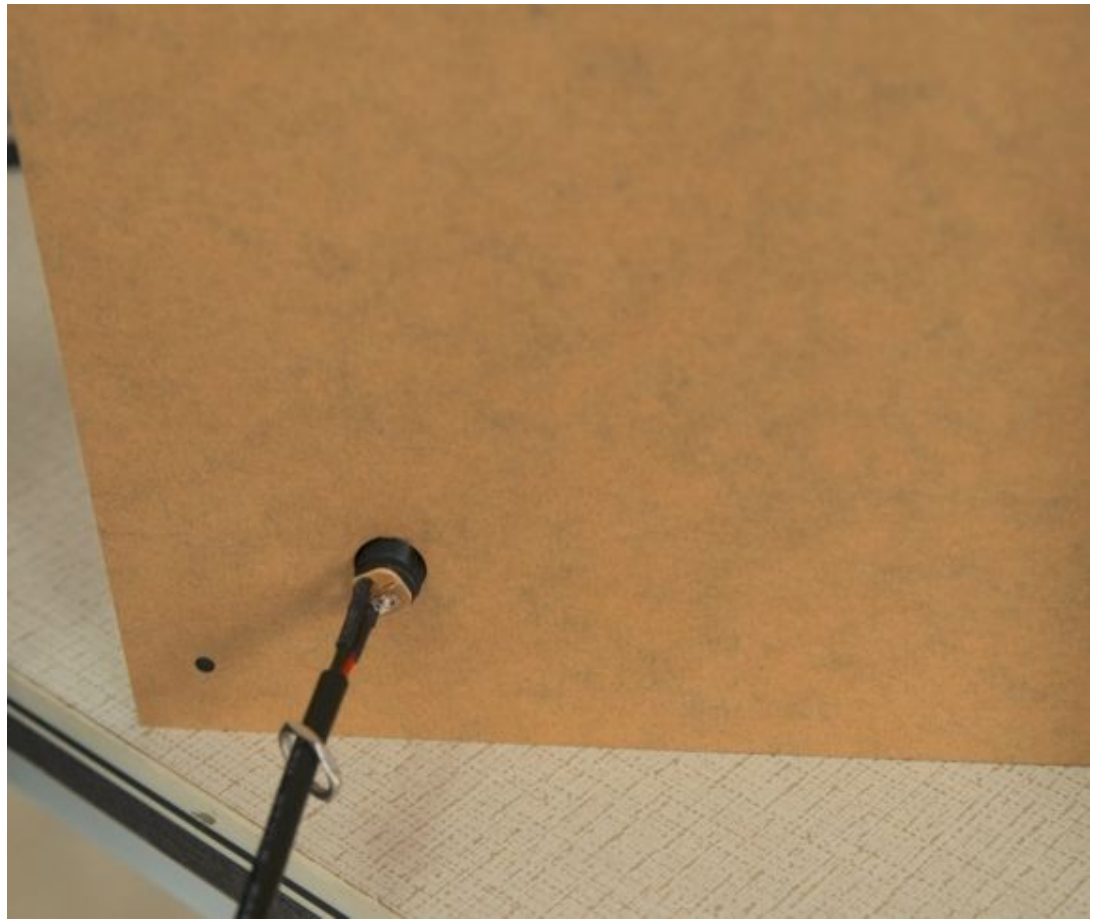

Here is the location of Back Panel with respect to Moai

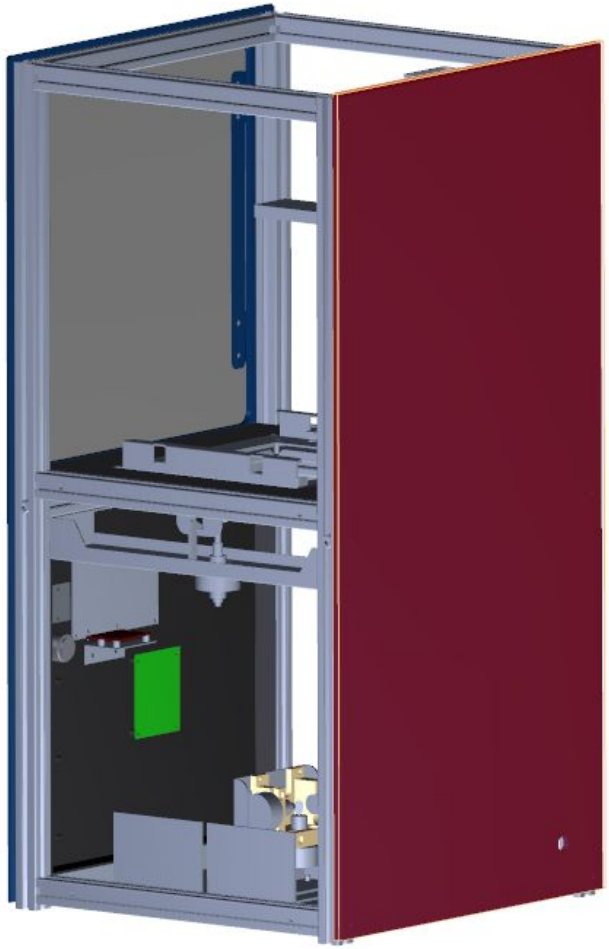

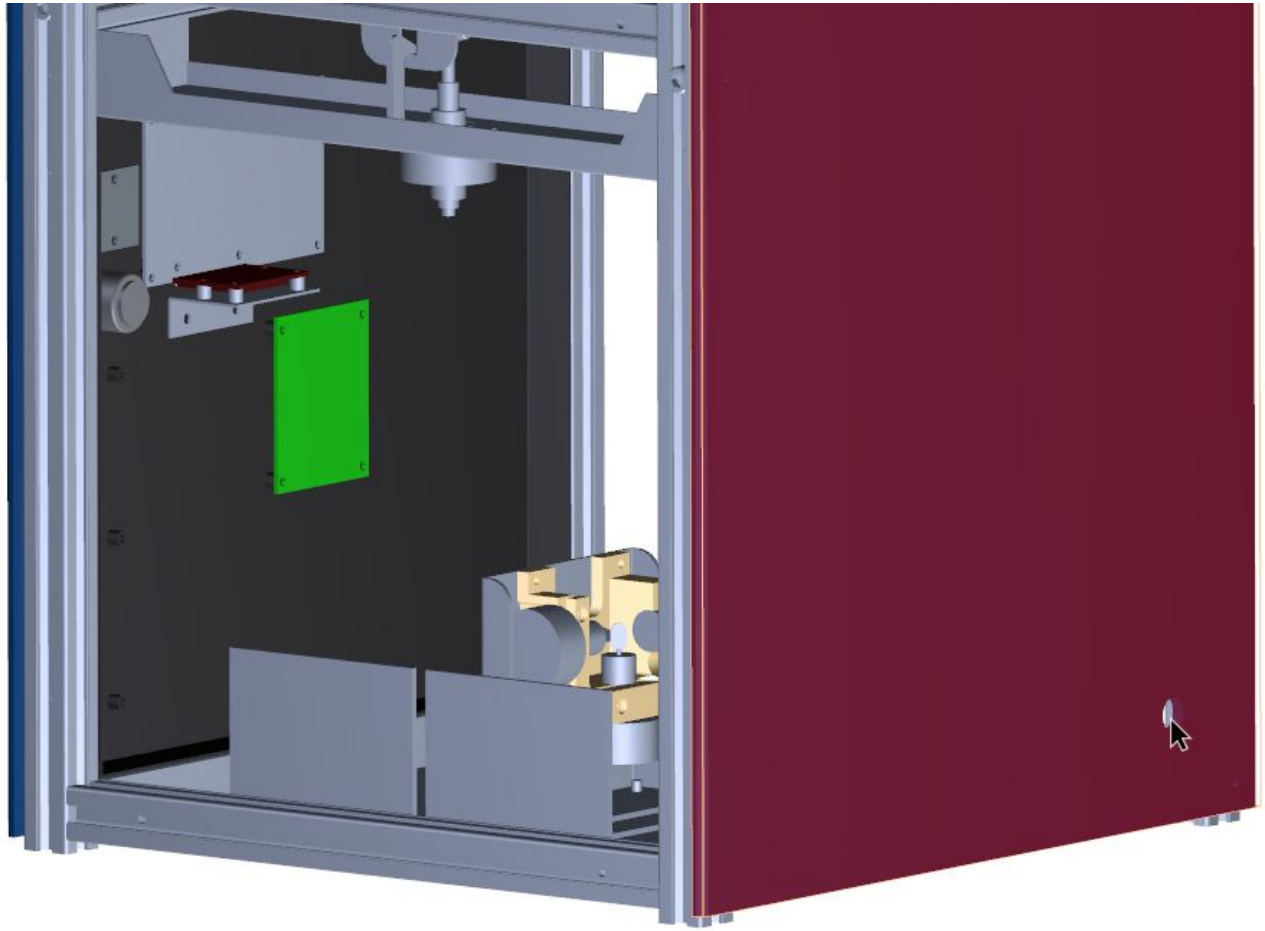

Install Back panel for Back frame, you can Identify it by the whole
Install Power Cable by
Use 6 BH M3-16 screws to secure

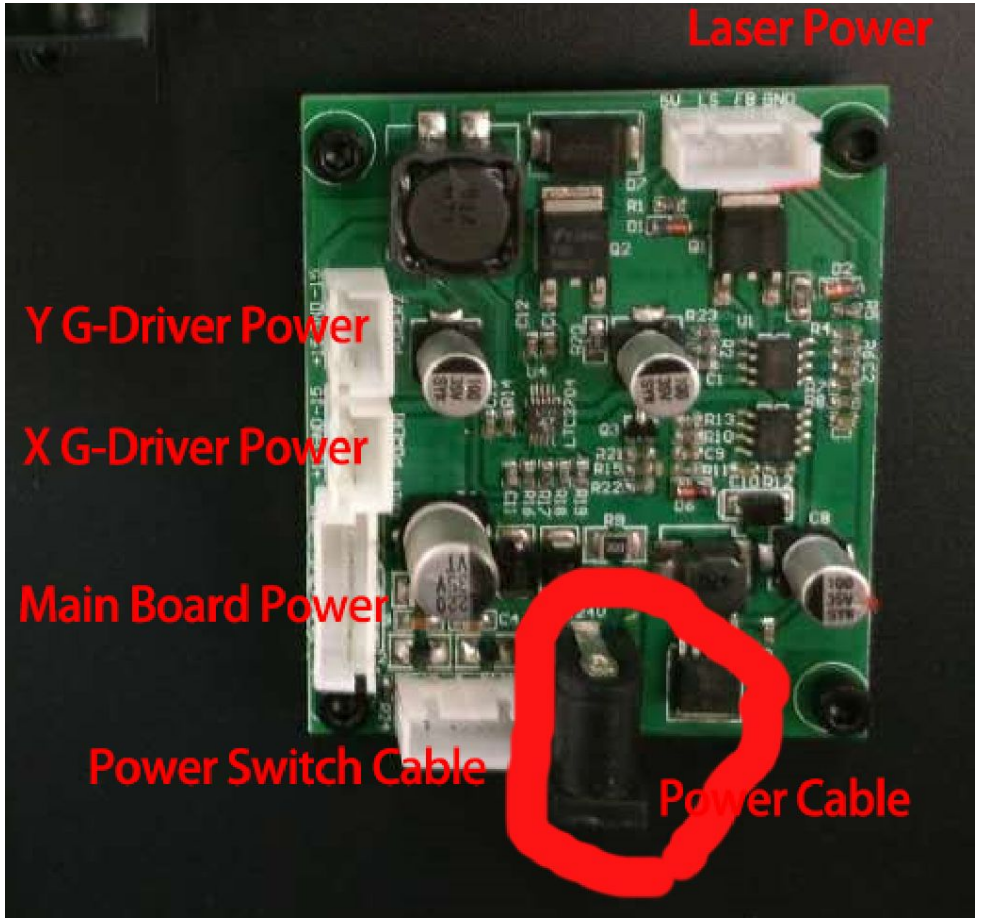

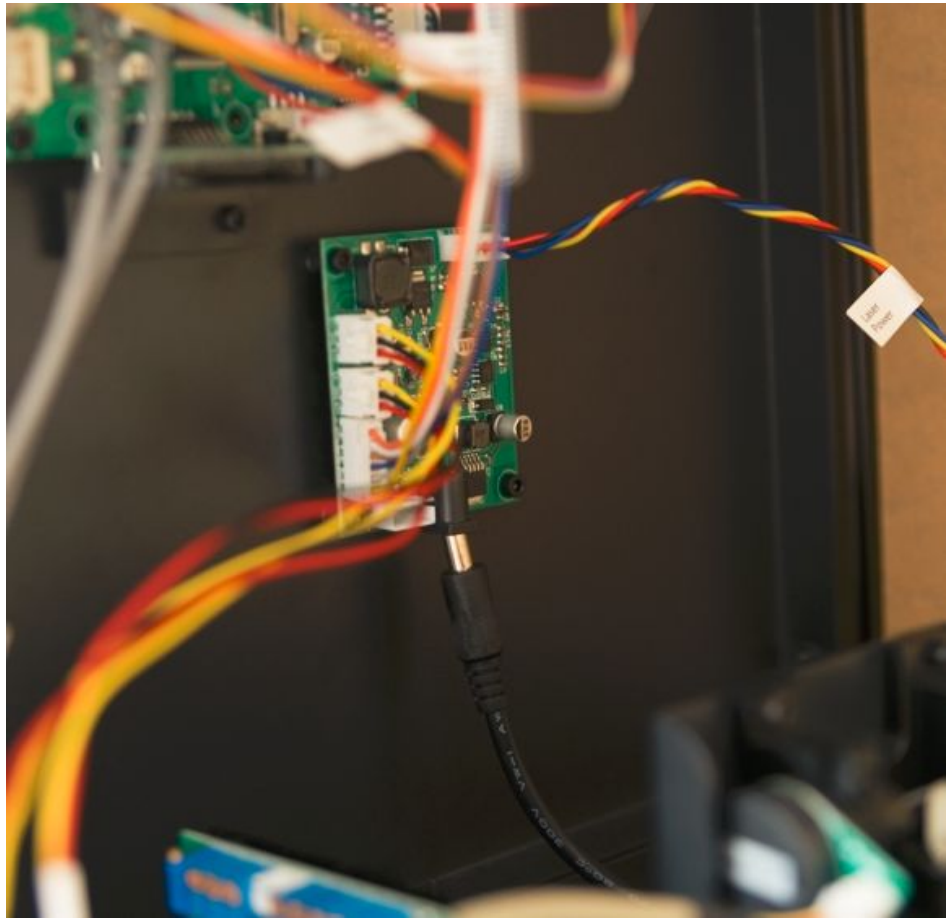

Before you close it up, please check out how to manage all the cables so it doesn't block off laser or caught by motor:
here is the document:
https://drive.google.com/open?id=10Hs4L5ChrQcMRv-hTj1OjxoXU1Nje65PGSYR9zzE0nU

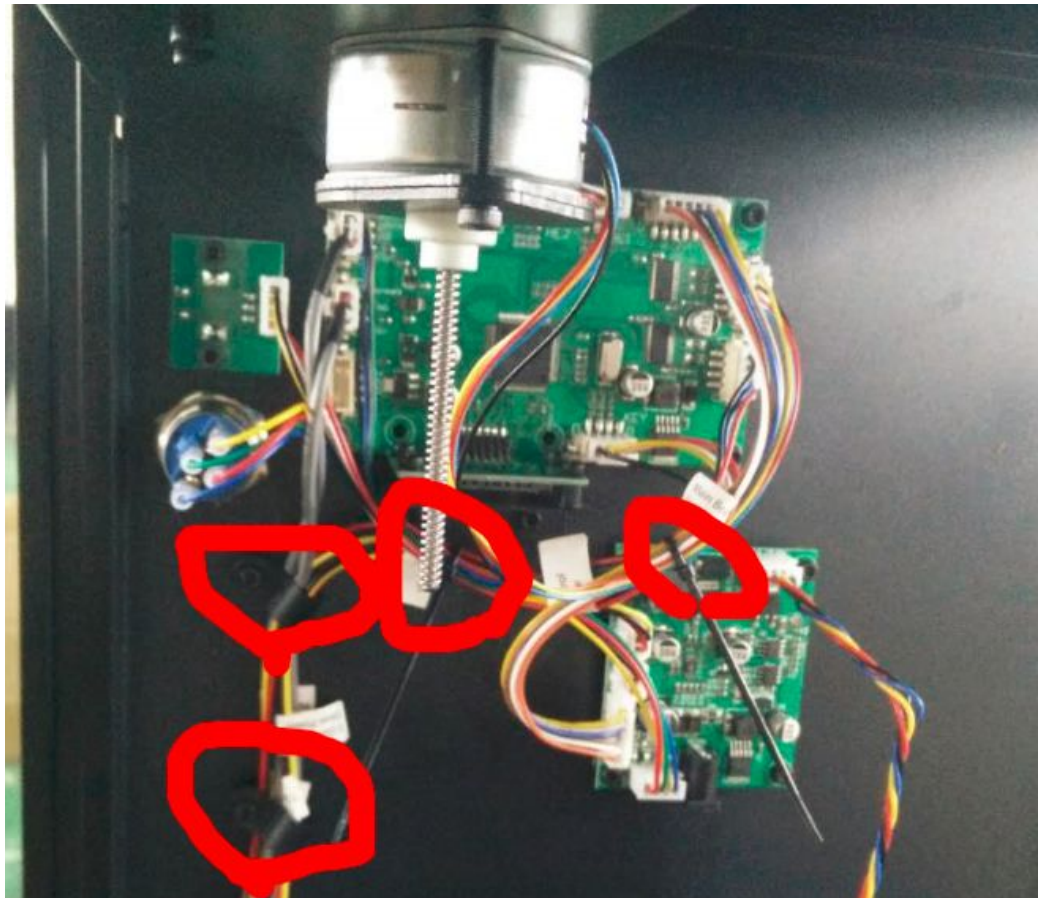

Find Protection Acrylic seen here. Install it to the galvo using silicone based gel (don’t use cyanoacrylate),just small amount and it will secure it. Tape would work too. Make sure you remove both sides’ protective film before proceeding

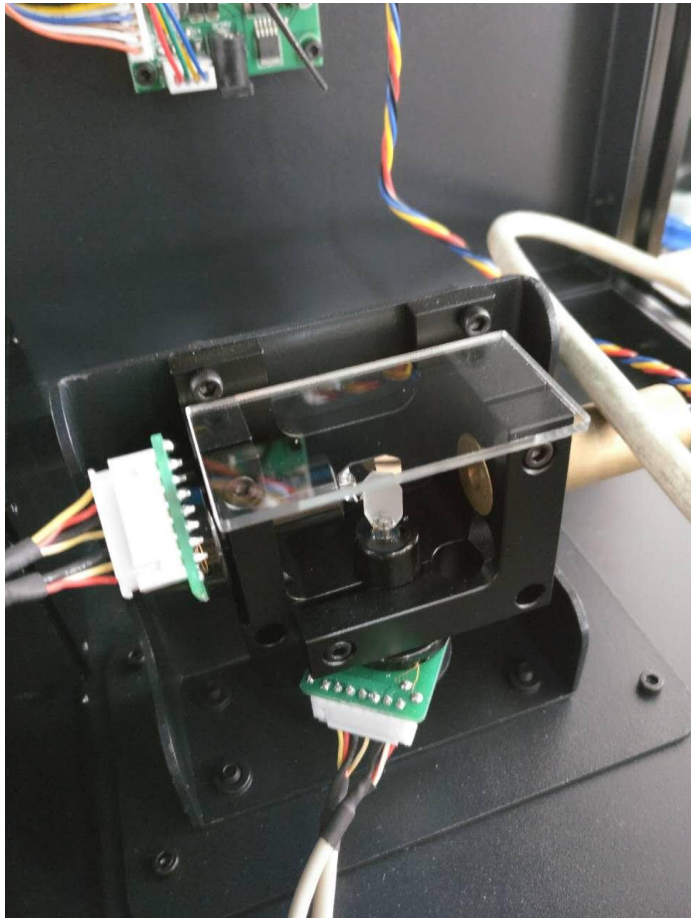

We recommend you do this last step ONLY AFTER YOU PRINTER PASS ALL the CALIBRATION and TEST PRINT because panels may hinder leveling.
USE Protection Glass when running test with panels off! You can now go back to user guide to follow calibration step.
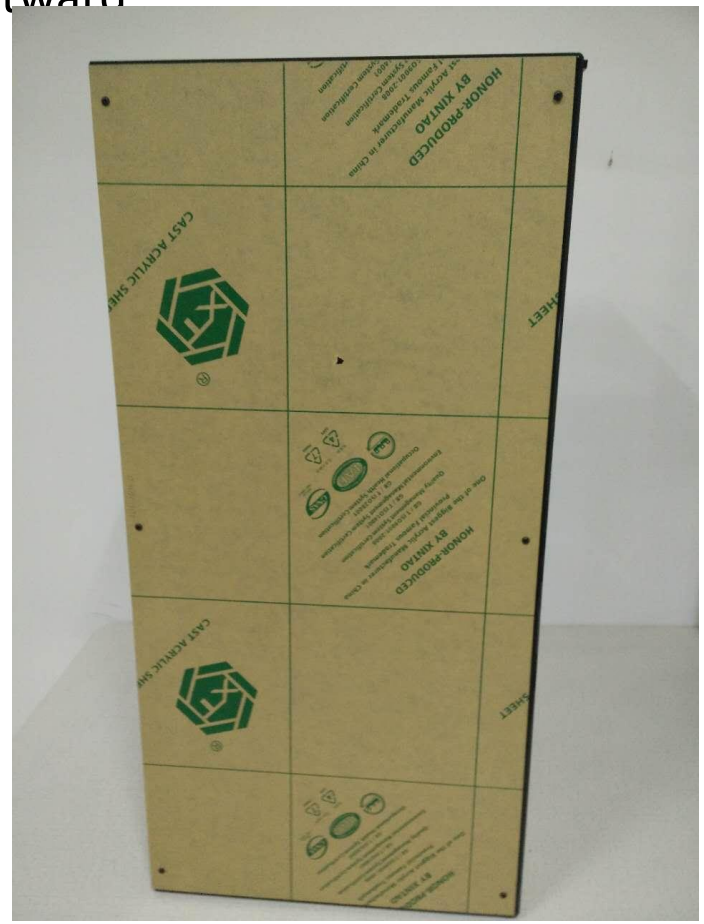
Install Left, Right and the Top. Use 6 BH M3-16 screws to secure each panel on the Right and Left. 4 for the Top Panel. Make sure the slant on the panel is facing outward