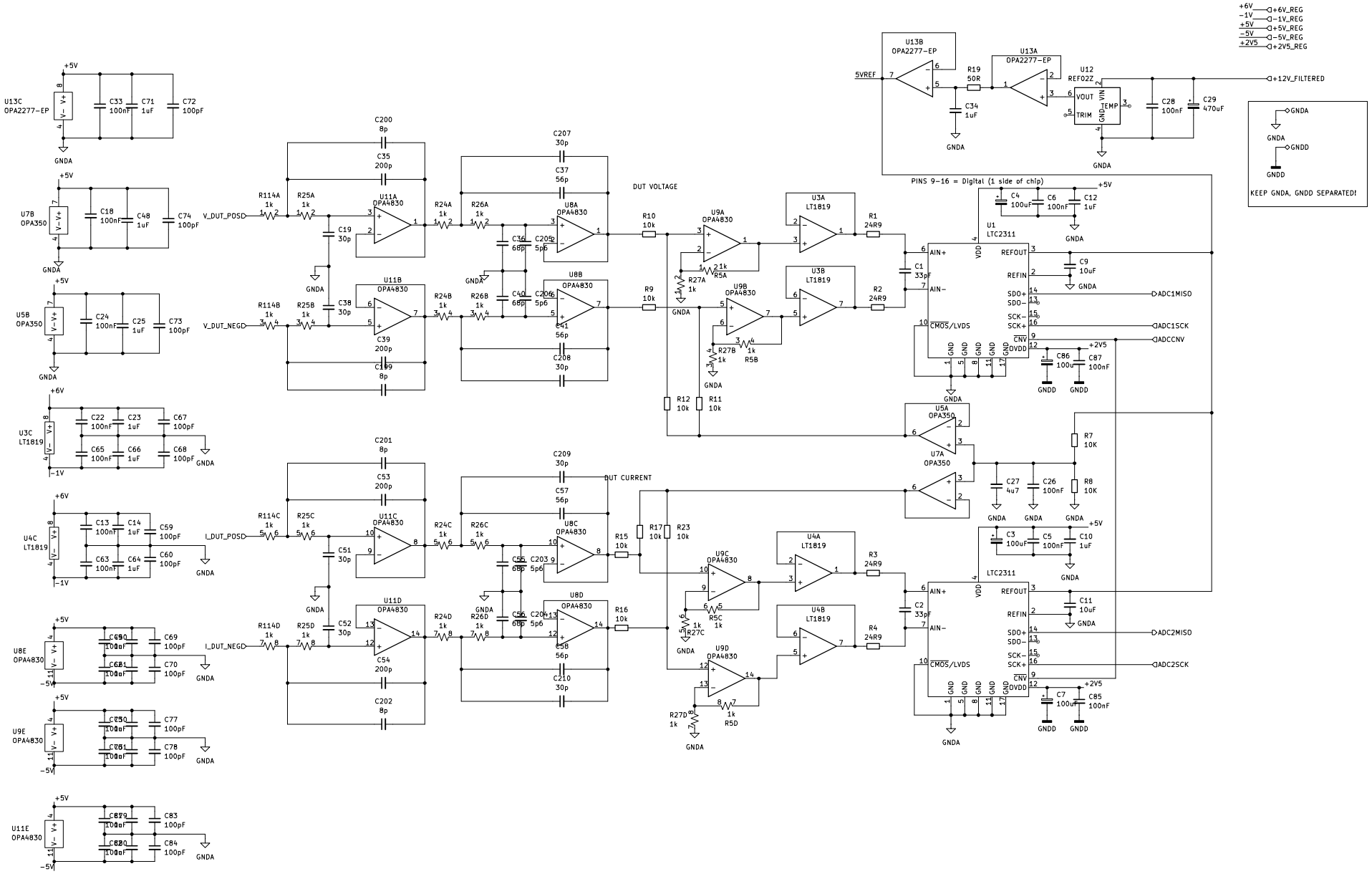
U13C OPA2277-EP
U7B OPA350
U5B OPA350
U3C LT1819
U4C LT1819
U8E OPA4830
U9E OPA4830
U11E OPA4830
V_DUT_POSD
V_DUT_NEGD
I_DUT_POSD
I_DUT_NEGD
U11A OPA4830
U11B OPA4830
U11C OPA4830
U11D OPA4830
U8A OPA4830
U8B OPA4830
U8C OPA4830
U8D OPA4830
DUT VOLTAGE
DUT CURRENT
U9A OPA4830
U9B OPA4830
U9C OPA4830
U9D OPA4830
U3A LT1819
U3B LT1819
U4A LT1819
U4B LT1819
U5A OPA350
U7A OPA350
U1 LTC2311
U2 LTC2311
ADC1MISO
ADC1SCK
ADCCNV
ADC2MISO
ADC2SCK
U13B OPA2277-EP
U13A OPA2277-EP
U12 REF02Z
5VREF
+12V_FILTERED
PINS 9-16 = Digital (1 side of chip)
KEEP GNDA, GNDD SEPARATED!