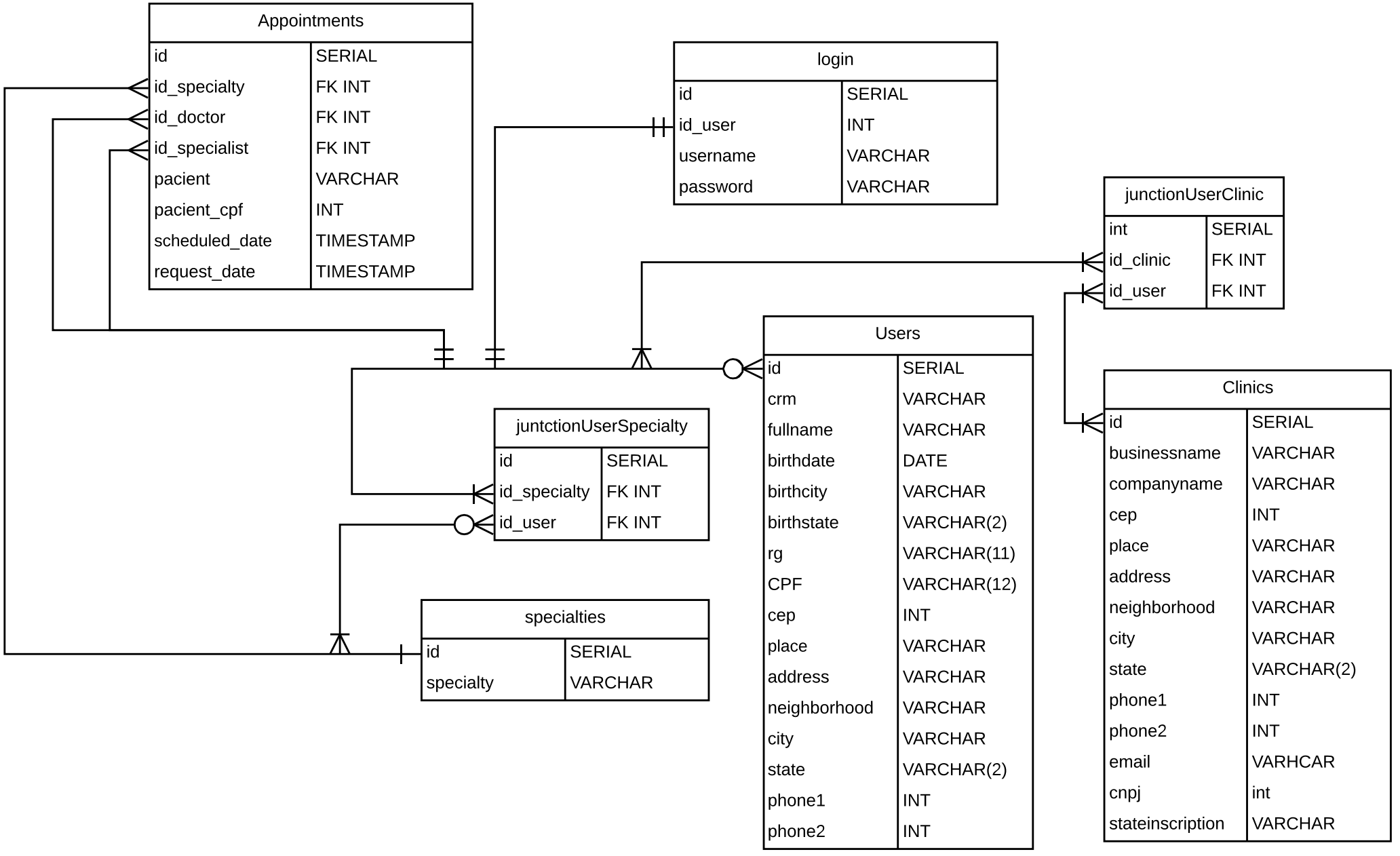
Appointments
id SERIAL
id_specialty FK INT
id_doctor FK INT
id_specialist FK INT
pacient VARCHAR
pacient_cpf INT
scheduled_date TIMESTAMP
request_date TIMESTAMP
login
id SERIAL
id_user INT
username VARCHAR
password VARCHAR
junctionUserClinic
int SERIAL
id_clinic FK INT
id_user FK INT
Users
id SERIAL
crm VARCHAR
fullname VARCHAR
birthdate DATE
birthcity VARCHAR
birthstate VARCHAR(2)
rg VARCHAR(11)
CPF VARCHAR(12)
cep INT
place VARCHAR
address VARCHAR
neighborhood VARCHAR
city VARCHAR
state VARCHAR(2)
phone1 INT
phone2 INT
Clinics
id SERIAL
businessname VARCHAR
companyname VARCHAR
cep INT
place VARCHAR
address VARCHAR
neighborhood VARCHAR
city VARCHAR
state VARCHAR(2)
phone1 INT
phone2 INT
email VARHCAR
cnpj int
stateinscription VARCHAR
juntctionUserSpecialty
id SERIAL
id_specialty FK INT
id_user FK INT
specialties
id SERIAL
specialty VARCHAR