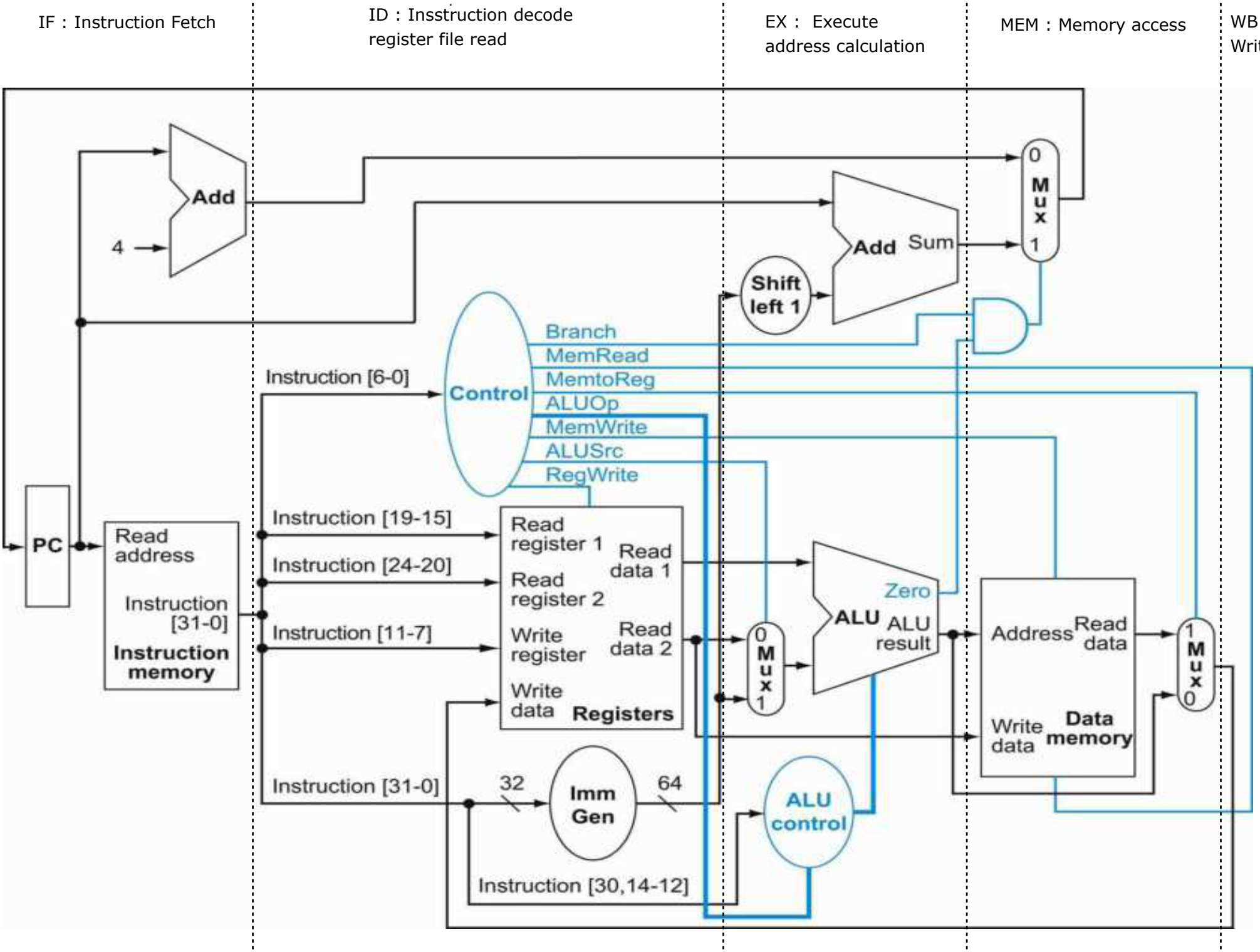

RISC-V (simple) datapath with control unit

Figure 4.17 from Hennessy & Patterson, Computer organization and design, the hardware / software interface, RISC-V edition. (page 508).