MAG-CXP00002-NP- CoaXPress Serializer ASIC

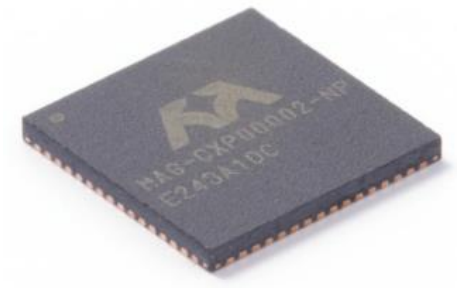

Figure 1: MAG-CXP00002-NP is packaged in a plastic QFN-64 package - including thermal pad.

1. Key performance parameters

- Core performance parameters
  - Parallel-to-serializer interface
  - CoaXPress (CXP) 2.0 device side interface
  - 1.25Gbps downlink communication
  - 20Mbps uplink communication
- Additional features
  - Programmable frame size and pixel depth
  - Imager reset and trigger HW outputs
  - 1.8V LDO output with up to 10mA load capability (to supply an imager)
  - On-chip 1.2V LDOs
  - GenICam compliant
  - 11 GPIOs
- Supplies and power consumption
  - Single 3.3V supply operation
  - 272 mW typical power consumption
- Clocking options
  - X-tal oscillator clock: 10-40MHz
  - External reference clock: 10-40MHz
- Interfaces
  - 12-bit parallel camera interface (receiver)
  - CoaXPress (CXP)-compatible video interface
  - 11 GPIOs for control/readback
    - Built-in Master SPI functionality on GPIO<10:7>
  - Dedicated master SPI to control imager
- Operation temperature: -40 to 85 degC junction
- Radiation hardness:
  - TID level: > 100Mrad / 1MGy (Si)
  - SEL/SEU: > 60 MeV.cm²/mg*

  ** by design – not validated*
- Package Info
  - Plastic QFN-64

2. Applications

- CoaXPress video streaming
- Machine vision/ Surveillance
- Camera control

3. Description

The MAG-CXP00002-NP is a camera interface ASIC that supports harsh environment video transmission over a 75-Ohm coax cable for camera applications.

The MAG-CXP00002-NP is a radiation-hardened device-side CoaXPress 2.0 video transmission ASIC. The ASIC supports downlink video streaming at 1.25Gbps (CXP-1 mode) and receives uplink control commands at 20.83Mbps, all over a single 75-Ohm cable. In addition, it also supports Power-over-Coax (PoC) and is compatible with COTS CXP frame grabbers. For CXP certified cables, the cable length can go above 100m in the mode of operation implemented (CXP-1).

The parallel input interface supports raw parallel pixel data from an image sensor with up to 12b pixel depth and is capable of interfacing different frame sizes and frame rates.

MAG-CXP00002-NP features a dedicated master SPI interface to communicate with an image sensor chip, as well as a secondary master SPI interface, allowing communication to other SPI slave devices, such as chips from the Magics Motion Series. The serializer ASIC also features imager control pins such as a RESET signal and a TRIGGER signal and integrates perfectly with the MAG-IMG001X1-NC image sensor of Magics. The chip set can form the heart of a camera system and the combination is fully GenICam compliant. From a user point of view (e.g. CXP host) the chip set is seen as a single device, because of the integrated register map bootstrapping implemented in the serializer ASIC, which holds a copy of the register map of the imager.

4. Simplified pinout diagram

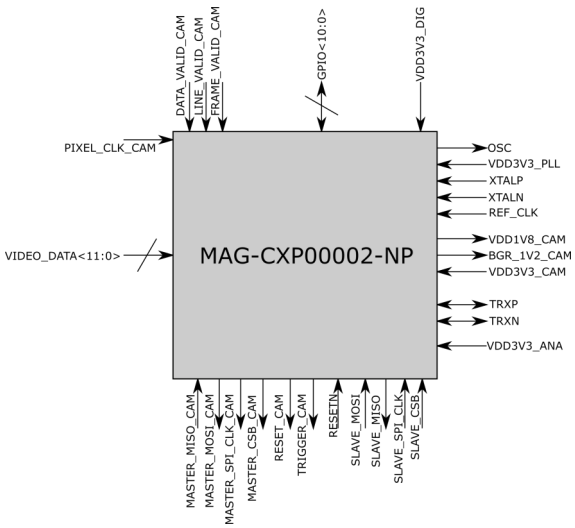

Figure 2: Simplified pinout of MAG-CXP00002-NP.

Copyright © Magics Technologies NV

A simplified pinout diagram of MAG-CXP00002-NP can be seen in Figure 2. The connection to the camera chip consists of the 12 pins that receive data from the imager chip (VIDEO_DATA<11:0>) and the synchronization signals (i.e. PIXEL_CLK_CAM, DATA_VALID_CAM, LINE_VALID_CAM and FRAME_VALID_CAM). The serializer has a master SPI dedicated for the imager, in addition to a reset signal RESET_CAM and trigger signal TRIGGER_CAM to control the imager chip. On the top row of the pins, there are 11 GPIOs pins that the user can used in different ways, such as for a second master SPI interface. The connection to the external clock crystal or the clock reference and the coaxial cable leading to the frame grabber are on the right side of the chip (XTALP/N, REF_CLK, TRXP/N). A 1.8V regulated power supply VDD1V8_CAM and a 1.2V reference voltage VREF_CAM can be used to provide power and a voltage reference to the imager, depending on the needs of the imager chip. Note that the VDD1V8_CAM pin cannot be used to drive the 1.8V domain of the MAG-IMG001X1-NC imager, as it cannot supply enough current.

The ASIC can be powered from a single 3.3V supply and power is given through multiple 3.3V pins. As there are several on-chip LDOs, external decoupling is required to compensate the loop for these LDOs. Therefore, there are multiple LDO pins on the chip as well.

5. Block Diagram

The block diagram in Figure 3 shows the main functional blocks of MAG-CXP00002-NP. The VTOI, PTAT, VREF and IREF form the biasing block, providing all other blocks with reference voltages and currents. The LDO_CAM and CAM_REF provide a 1.8V power supply and a 1.2V reference voltage for the imager chip connected to MAG-CXP00002-NP. The clock reference block, containing an oscillator and buffer for an external clock reference form together with the PLL the clock generation block, generating the required 125MHz and 1.25GHz on-chip clocks for the digital block and the serializer. The serializer, low-voltage differential signalling (LVDS) driver and the hybrid block form the front-end block which is responsible for serializing the parallel data from the digital block and transmitting it to a coaxial cable. In addition, it takes care of receiving the slow uplink communication data sent by the frame grabber to the serializer via the same coax cable. Finally, the digital block is responsible for deserializing the uplink communication, and the encoding of the parallel data from the imager to be sent to the serializer. The digital block also houses SPI modules for slave and master SPI interfaces, next to the GenICam compliant register bank.

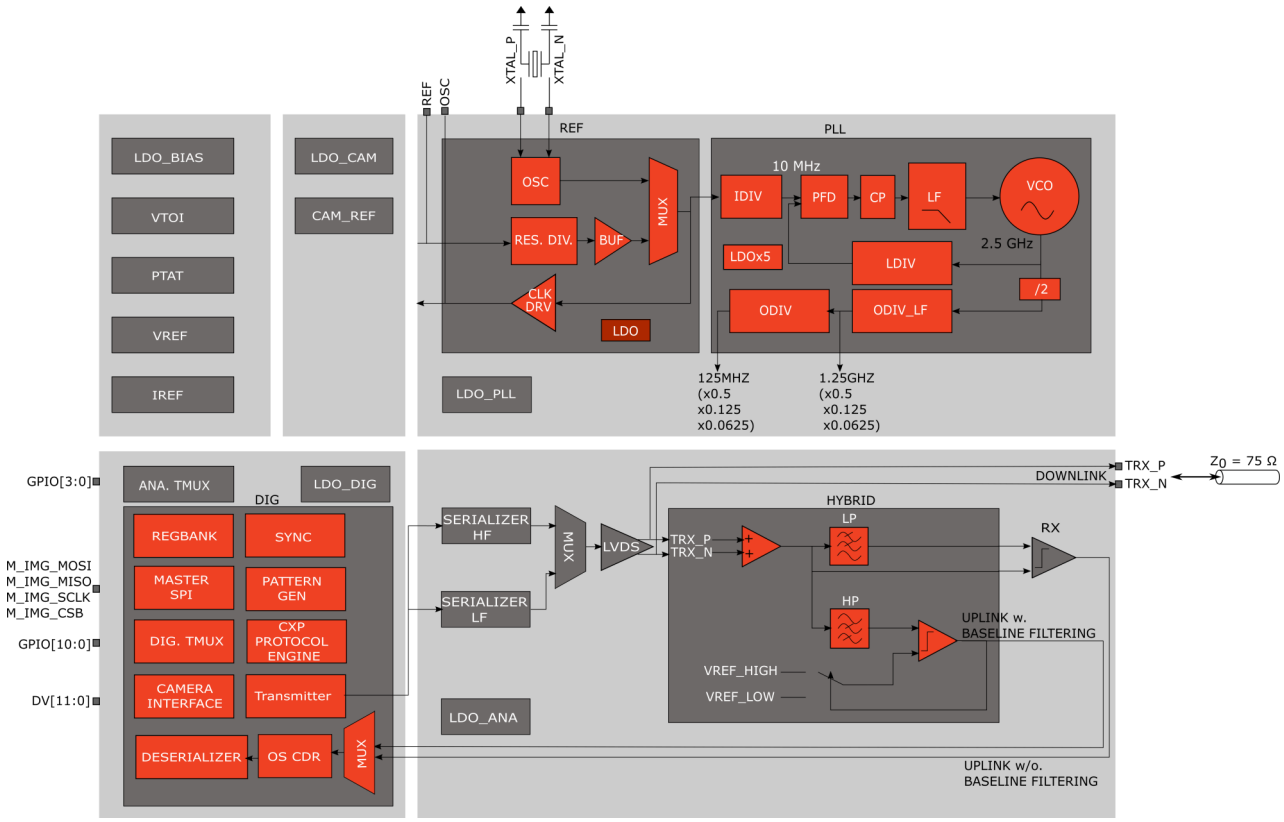

Figure 3: Top-level block diagram of MAG-CXP00002-NP.

Copyright © Magics Technologies NV

6. Pin configurations and functions

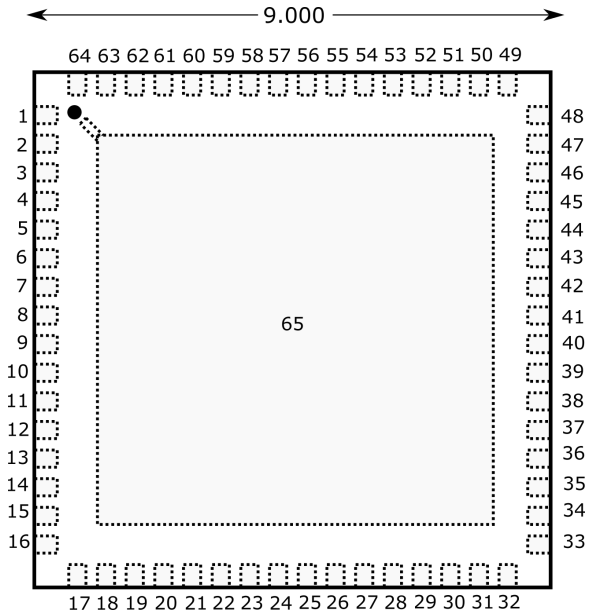

Figure 4: Pinning diagram of MAG-CXP00002-NP in a QFN-64 package (top-view with pins annotated – dashed lines are at the bottom side).

The pin list and corresponding place on the package is given in the table below and in the figure above, respectively. Note that the picture is looked from at the top. The left upper pin of the QFN package is pin number 1. A proposal for decoupling cap and external components is given in the last column of the table.

Table 1: Pin list, pin names and descriptions

PIN	NAME	I/O	Description	External components or connections
1	PIXEL_CLK_CAM	I	Clock signal from imager	
2	VIDEO_DATA_11	I	Video data from imager	
3	VIDEO_DATA_10	I	Video data from imager	
4	VIDEO_DATA_9	I	Video data from imager	
5	VIDEO_DATA_8	I	Video data from imager	
6	VIDEO_DATA_7	I	Video data from imager	
7	VIDEO_DATA_6	I	Video data from imager	
8	VSS	Ground	Ground	
9	VSS_DIG	Ground	Ground	
10	VSS_DIG	Ground	Ground	
11	VIDEO_DATA_5	I	Video data from imager	
12	VIDEO_DATA_4	I	Video data from imager	
13	VIDEO_DATA_3	I	Video data from imager	
14	VIDEO_DATA_2	I	Video data from imager	
15	VIDEO_DATA_1	I	Video data from imager	
16	VIDEO_DATA_0	I	Video data from imager	
17	MASTER_MISO_CAM	I	Master SPI data input for imager	
18	MASTER_MOSI_CAM	O	Master SPI data output for imager	
19	MASTER_SPI_CLK_CAM	O	Master SPI clock output for imager	
20	MASTER_CSB_CAM	O	Master SPI chip select output for imager	

Copyright © Magics Technologies NV

MAG-CXP00002-NP- CoaXPress Serializer ASIC

PIN	NAME	I/O	Description	External components or connections
21	TRIGGER_CAM	O	Trigger signal for imager	
22	RESET_CAM	O	Reset signal for imager	
23	LDO_DIG_OUT	Analog	DIG LDO output	Decoupling on pin 50.
24	SLAVE_MOSI	I	Slave SPI data input	Ground if not used.
25	SLAVE_MISO	O	Slave SPI data output	
26	SLAVE_SPI_CLK	I	Slave SPI clock input	Ground if not used.
27	SLAVE_CSB	I	Slave SPI chip select input	Add pull-up resistor of 4.7kOhm for correct operation if not used.
28	RESETN	I	RESET signal for chip	
29	VDD2V5_OTP	Supply	OTP supply	
30	VDD3V3_DIG	Supply	IO supply for DIG LDO	
31	VDD3V3_ANA	Supply	IO supply for ANA LDO	
32	LDO_OUT_ANA	Analog	ANA LDO output	1uF Murata GRM155C70J105KE11
33	LDO_OUT_ANA	Analog	ANA LDO output	
34	VSS_ANA	Ground	Analog domain ground	
35	TRXN	O	Driver output n	75 Ohm Coax cable with 56nF series cap
36	TRXP	O	Driver output p	75 Ohm termination
37	VSS_ANA	Ground	Analog domain ground	
38	VDD3V3_CAM	Supply	IO supply for CAM LDO	
39	VREF_CAM	Analog	CAM reference output	10nF external cap
40	LDO_CAM_OUT	Supply	CAM LDO output	1uF Murata GRM155C70J105KE11
41	LDO_VCO_OUT	Analog	VCO LDO output	
42	REF_CLK	I	Reference clock input	**Note: internal 330 Ohm load!**
43	XTALN	I	Crystal input n	
44	XTALP	I	Crystal input p	
45	LDO_OUT_PLL	Analog	PLL LDO output	100nF Murata GRM155R70J104KA01
46	LDO_OUT_BIAS	Analog	BIAS LDO output	100nF Murata GRM155R70J104KA01
47	VDD3V3_PLL	Supply	IO supply for PLL LDO	
48	OSC	O	Clock reference for external use (e.g. imager)	
49	VDD3V3_DIG	Supply	IO supply for DIG LDO	
50	LDO_DIG_OUT	Analog	DIG LDO output	100nF Murata GRM155R70J104KA01
51	GPIO_0	I/O	General purpose IO/SPI_CSB7	Optional pull-up or pull-down resistors
52	GPIO_1	I/O	General purpose IO/SPI_CSB6	Optional pull-up or pull-down resistors
53	GPIO_2	I/O	General purpose IO/SPI_CSB5	Optional pull-up or pull-down resistors
54	GPIO_3	I/O	General purpose IO/SPI_CSB4	Optional pull-up or pull-down resistors
55	GPIO_4	I/O	General purpose IO/SPI_CSB3	Optional pull-up or pull-down resistors
56	GPIO_5	I/O	General purpose IO/SPI_CSB2	Optional pull-up or pull-down resistors
57	GPIO_6	I/O	General purpose IO/SPI_CSB1	Optional pull-up or pull-down resistors
58	GPIO_7	I/O	General purpose IO/SPI_CSB0	Optional pull-up or pull-down resistors
59	GPIO_8	I/O	General purpose IO/SPI_CLK	Optional pull-up or pull-down resistors
60	GPIO_9	I/O	General purpose IO/SPI_MOSI	Optional pull-up or pull-down resistors
61	GPIO_10	I/O	General purpose IO/SPI_MISO	Optional pull-up or pull-down resistors
62	FRAME_VALID_CAM	I	Frame valid from camera	
63	LINE_VALID_CAM	I	Line valid from camera	
64	DATA_VALID_CAM	I	Data valid from camera	
65	Thermal Pad	Ground		

Copyright © Magics Technologies NV

7. Specifications

7.1 Absolute maximum ratings

Name	Description	Min	Max	Unit
VDD3V3_DIG, VDD3V3_PLL, VDD3V3_ANA VDD3V3_CAM	IO supply voltages	-0.3	3.80	V
LDO_OUT_DIG, LDO_OUT_PLL, LDO_OUT_BIAS, LDO_OUT_ANA	LDO outputs for core voltage. Can be used to externally provide core voltage too, if needed.	-0.3	1.38	V
VDD1V8_CAM	LDO output for the camera chip	-0.3	3.8	V
VDD1V2_CAM	Voltage reference for the camera chip	-0.3	1.38	V
GPIO_10…GPIO_0	11 GPIO pins	-0.3	3.80	V
VIDEO_DATA_11…VIDEO_DATA_0	Data input from camera chip	-0.3	3.80	V
FRAME_VALID_CAM, LINE_VALID_CAM, DATA_VALID_CAM	Frame/Line/Data valid from camera chip	-0.3	3.80	V
PIXEL_CLK_CAM	Clock signal from camera chip	-0.3	3.80	V
OSC	Clock reference for the camera chip	-0.3	3. 80	V
XTALP/XTALN	Crystal interface	-0.3	1.38	V
REF_CLK	Clock reference for the serializer chip	-0.3	3. 80	V
TRXP/TRXN	Downlink/Uplink interface	-0.3	1.38	V
SLAVE_SPI_CLK, SLAVE_MOSI, SLAVE_MISO, SLAVE_CSB	Slave SPI interface	-0.3	1.38	V
MASTER_SPI_CLK_CAM, MASTER_MOSI_CAM, MASTER_MISO_CAM, MASTER_CSB_CAM	Master SPI interface for the camera chip	-0.3	1.38	V
RESET_CAM	Reset for camera chip	-0.3	3. 80	V
TRIGGER_CAM	Trigger for camera chip	-0.3	3. 80	V
RESETN	Serializer chip reset	-0.3	3. 80	V
Tj	Junction temperature	-55	175	°C
Tstorage	Storage temperature	-55	50	°C

7.2 Recommended operating conditions

Description	Min	Typ	Max	Unit
VDD3V3_DIG/ANA/PLL/CAM	2.97	3.3	3.63	V
VDD1V8_CAM	1.62	1.8	1.98	V
VDD1V2_DIG/ANA/PLL/BIAS	1.08	1.2	1.32	V
GPIO<10:0>	2.97/1.08	3.3/1.2	3.63/1.32	V
Parallel video interface (DV<11:0>, FVAL, DVAL, LVAL, PCLK)	2.97	3.3	3.63	V
Master/Slave SPI	2.97/1.08	3.3/1.2	3.63/1.32	V
XTAL	1.08	1.2	1.32	V
Operation temperature (junction temperature)	-40	-	85	°C

7.3 Electrical characteristics

Label	Parameter	Test conditions	Min	Typ	Max	Unit
Current consumption						
$I_{VDD3V3_TOTAL_AVG}$	3.3V total supply rail current average		-	82.35	-	mA
$I_{VDD3V3_DIG_AVG}$	3.3V digital supply rail current average		14.45	18.6	28	mA
$I_{VDD3V3_ANA_AVG}$	3.3V analog supply rail current average		-	49.8	-	mA
$I_{VDD3V3_PLL_AVG}$	3.3V pll supply rail current average		-	13.93	-	mA
Power consumption						
	Total power consumption		-	271.55	-	mW
Logic level inputs for SPI						
V_{IL}	Input low voltage threshold		390	470	635	mV
V_{IH}	Input high voltage threshold		443	550	715	mV

Copyright © Magics Technologies NV

Label	Parameter	Test conditions	Min	Typ	Max	Unit
Hysteresis	Hysteresis of the SPI input levels		38	80	117	mV
Logic level inputs for GPIO<10:0>, dv11:0>, lval, fval, dval, pclk						
V_{IL}	Input low voltage threshold		390	470	635	mV
V_{IH}	Input high voltage threshold		443	550	715	mV
Hysteresis window			38	80	117	mV
Logic level inputs for DV<11:0>						
V_{IL}	Input low voltage threshold		1.147	1.328	1.689	V
V_{IH}	Input high voltage threshold		1.482	1.714	2.282	V
Hysteresis			309	387	593	mV
Data rate for DV<11:0>						
$DR_{in,par}$	parallel video data rate		-	-	100	MHz
Data rate for transceiver output TRXP and TRXN						
Z_L	Transceiver load		-	75	-	Ω
DR_{down}	downlink data rate		-	1.25	-	Gbps
DR_{up}	uplink data rate		-	20.833	-	Mbps
Crystal oscillator						
f_{XTAL}	Xtal frequency		10	20	40	MHz
CAM signals						
V_VDD1V8_CAM	Supply voltage to supply 1.8V to external imager		1.7	1.8	1.9	V
I_VDD1V8_CAM	Load current which can be sourced from the VDD1V8_CAM pin.				10	mA
V_VDD1V2_CAM	Reference voltage which could be used by an imager		1.15	1.2	1.25	V

Copyright © Magics Technologies NV

8. Detailed description

In the next sections the operation of the device together with the different features is described in more detail.

8.1 Power-on-sequence

The chip can be powered from a single 3.3V supply. After powering the chip and after releasing the reset, a device discovery is typically initiated by the CXP host (i.e. frame grabber) and consists of the following tasks:

- Match Device transmitter and Host receiver bit rates to obtain register access.
- Discover Devices and the connection topology.
- Negotiate the CoaXPress version to use (CXP v2.0 is implemented, but it is compatible with lower versions).
- Detect the high speed up-connection (not supported in this version of the standard – fixed at 20.83Mbps).
- Negotiate maximum packet sizes.
- Set the connection speed after reading *ConnectionConfigDefault* .

Any link reset issued either in this device discovery sequence or by the user (Address 0x4000) triggers the bootstrap FSM module and resets the connected imager for a selected delay. The bootstrap FSM module is responsible for synchronizing the registers of MAG-CXP00002-NP and the connected imager. From a user point of view, it seems that the chip set (imager and serializer) is a single device, sharing a single register map. More information can be found in section 9.2 when used in combination with the Magics Full HD imager MAG-IMG001X1-NC.

8.2 Parallel video input interface

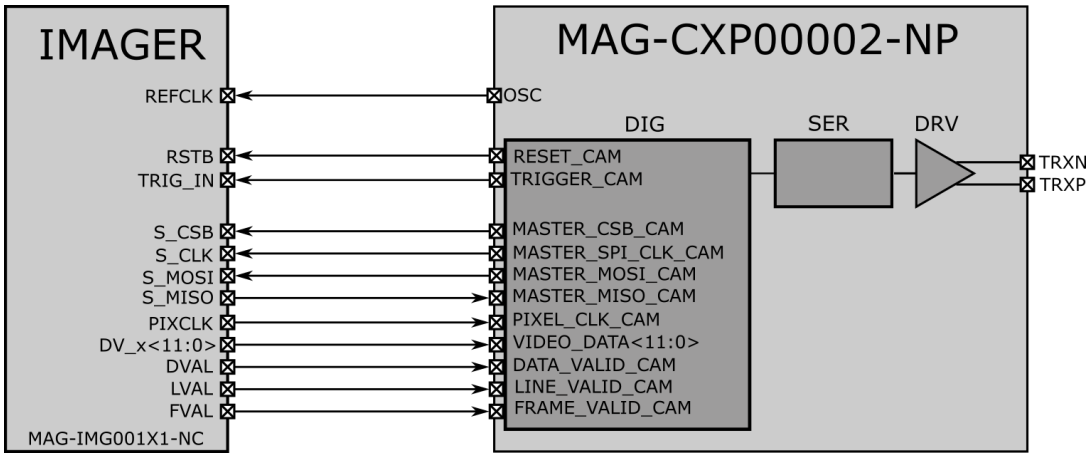

Figure 5: Video interface for MAG-CXP00002-NP.

A typical image sensor connection scenario of the MAG-CXP00002-NP is shown above in Figure 5 using the Magics MAG-IMG001X1-NC image sensor chip as the imaging device. The interface between the camera chip and the serializer consists of the parallel data of the captured image (DV_x<11:0> or VIDEO_DATA<11:0>), the data/line/frame valid signals (DVAL, LVAL, FVAL or DATA_VALID_CAM, LINE_VALID_CAM, FRAME_VALID_CAM), the PIXCLK clock from the imager chip for synchronization and sampling of the input signals from the imager chip, an SPI interface for communication and a reference clock and trigger output going from the serializer to the imager chip.

Copyright © Magics Technologies NV

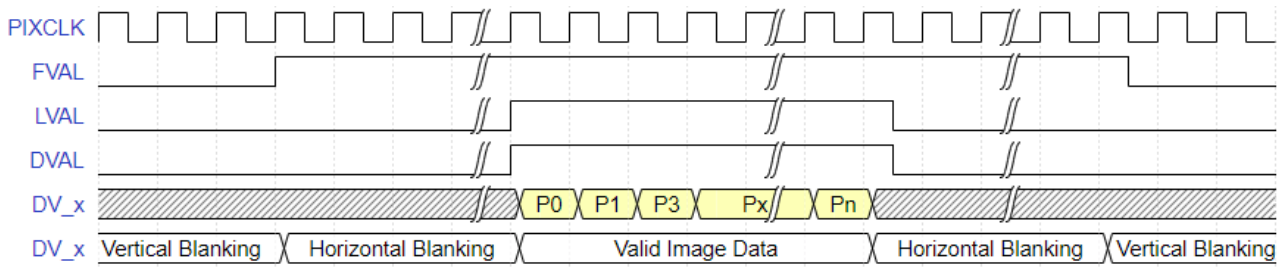

Figure 6: Timing diagram for the video interface between serializer and camera chip.

The timing diagram in Figure 6 the signals between the imager chip and the serializer. The pixel data clock PCLK provides the means to sample the data and the edge with which the serializer samples the incoming data can be changed if necessary. For the latter it is referred to register. The FVAL signals that a frame is still being read out, while the LVAL and DVAL signals are active while a line respectively a pixel is being read out.

8.3 CXP interface

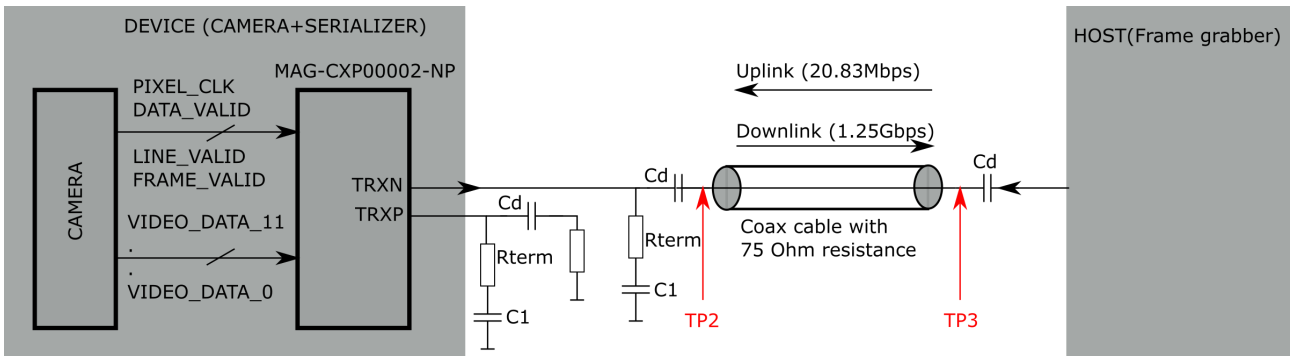

Figure 7: CXP interface between MAG-CXP00002-NP and a frame grabber.

The CXP interface is depicted in Figure 7. The device side, consisting of the imager chip and the serializer MAG-CXP00002-NP is connected to the host side (frame grabber) via a 75 Ohm coaxial cable according to the CoaXPress 2.0 standard. As the LVDS driver of MAG-CXP00002-NP has a differential output, only one output pin, TRXN is connected to the coaxial cable, while the other output pin is locally terminated on the PCB using a 75 Ohm resistance. The decoupling capacitors Cd are chosen to the values provided by the CoaXPress 2.0 standard documentation according (56nF in our case). If required, PoC can be applied on TP3 to supply the device side with power. In this case, a PoC filter is also added on TP2, while the serializer chip should switch to the baseline wandering filtered uplink mode to correctly read the data from the host side. Note that commercial frame grabbers always implement such PoC feature on the host side. However, the default PoC voltage defined by the standard is 24V. Note that Magics' DC/DC converters (MAG-PSU00001-NP) cannot handle such high voltage and are limited to 11V max at their input.

8.4 Master SPI interface

Two serial Peripheral interface (SPI) Masters are provided where the first one is connected to the imager's slave interface for synchronizing MAG-CXP00002-NP registers to the imager's registers and program its registers through uplink commands sent from the frame grabber. The second SPI master is sharing the GPIO pins when enabled and is used to control an external ASIC having an SPI slave interface.

The main features of the instantiated SPI master are:

- The SPI mode is fixed to mode 0, other modes are not supported. This means:
  - The idle clock level is 0
  - Serial data is captured on the rising edge

Copyright © Magics Technologies NV

- Serial data is updated/launched on the falling edge
- A runtime configurable transaction size in bits up to 64 bits.
- A runtime configurable clock frequency

8.4.1 Imager Master SPI

This SPI master is dedicated to the imager connected to it. The control of the master is taken care of by the bootstrap FSM, which ensures that all configuration data ends up at the imager, and that all necessary information to configure itself, is read from the imager. The latter ensures that the serializer works together properly with the imager. More information can be found in section 9.2.

For the SPI master connected to the imager, the default clock frequency is 20.83Mhz. However, the frequency can be adapted through the register '*VendorUniqueBootstrapFSM_spi_master_clock_divider*'.

8.4.2 General purpose Master SPI

As mentioned above, a second master SPI is implemented on the chip, and the IO pins for the hardware interface are shared with the GPIO pins. The GPIO pins to be used for the general purpose master SPI are listed in section 6, i.e. pins 58 to 61 (SPI_CSB0, SPI_CLK, SPI_MOSI, SPI_MISO). The rest of the GPIO pins could also be used as SPI chip selects, which means that you can connect up to 8 different slave SPI devices to the GPIO pins. To enable the master SPI functionality on the GPIO pins, please set register bit *'VendorUniqueSPIGPIO_spi_enable'.* Note that also the clock frequency of the general purpose master SPI can be selected, but by the register *'VendorUniqueSPIGPIO_divider'*. Default frequency is 62.5 MHz, because the *'VendorUniqueSPIGPIO_divider'* value is set to a default 0 .

The transaction size of the SPI command can be chosen with the register *'VendorUniqueSPIGPIO_transaction_size'* and can be up to 64 bits. The slave to be selected is to be defined in register *'VendorUniqueSPIGPIO_ssel'*. The data to be sent to the slave needs to be written in *'VendorUniqueSPIGPIO_data_mosi'* (note: 2 32-bit registers – address 0xd440 and 0xd448). The data that will be received from the SPI is to be found back in register *'VendorUniqueSPIGPIO_data_miso'* (note: 2 32-bit registers – address 0xd44c and 0xd450). If a SPI command needs to be initiated, the above settings need to be set before initiating the SPI access. The latter can be done by writing a 1 to the register *'VendorUniqueSPIGPIO_trigger'*. This field is automatically reset to 0 afterwards. To monitor if the transaction is still busy, the register *'VendorUniqueSPIGPIO_busy'* could be read and equals 1 if a transaction is busy.

Note that this general purpose Master SPI is to be controlled through CXP up-link commands and as a result, the remaining bandwidth for these commands depend on the selected video mode and corresponding frame rate and data load. This means that the rate/speed of writing and reading SPI data can depend on the video mode selected. As a result, Magics advises to not use this SPI interface to be integrated in control loops which require accurate timing, such as motor control loops. For the latter, Magics advises to use the BiSS communication chips from the Motion Series.

8.5 GPIOs and programmability

The GPIOs implementation is compliant with the GenICam/IIDC2 standard (see Figure 8). The GPIO pins are also shared with an SPI master interface. The SPI master functionality is described in the previous section. This section covers the GPIO control. As mentioned, Figure 8 below gives an overview of the block diagram of the normal DigitalIOControl for each I/O line. However, we do not implement all features as are depicted in the figure. Referring to Figure 8, we do not implement the *TriggerSource* and *TimerTriggerSource* blocks.

By default, all the GPIOs are set to input. This could be changed to an output in register *'IOLineModeAll_Value'*. In addition, the '*IOLineSource_Value*' register needs to be set to 32 when a GPIO is set as an output. The polarity of the GPIO could be changed by setting the register *'IOLineInverterAll_Value'* to 1. Note that each of these registers are 11 bit wide to control each corresponding GPIO.

To read the input from a GPIO, please refer to the register *'IOLineStatusAll_Value'*. To drive the output of a GPIO pin, please refer to register *'IOUserOutputValueAll_Value'.* Additionally, there is the functionality to connect internal source signals to an IO line. Please refer to registers *'IOLineSelector_Value'* and *'IOLineSource_Value'* for this functionality.

Copyright © Magics Technologies NV

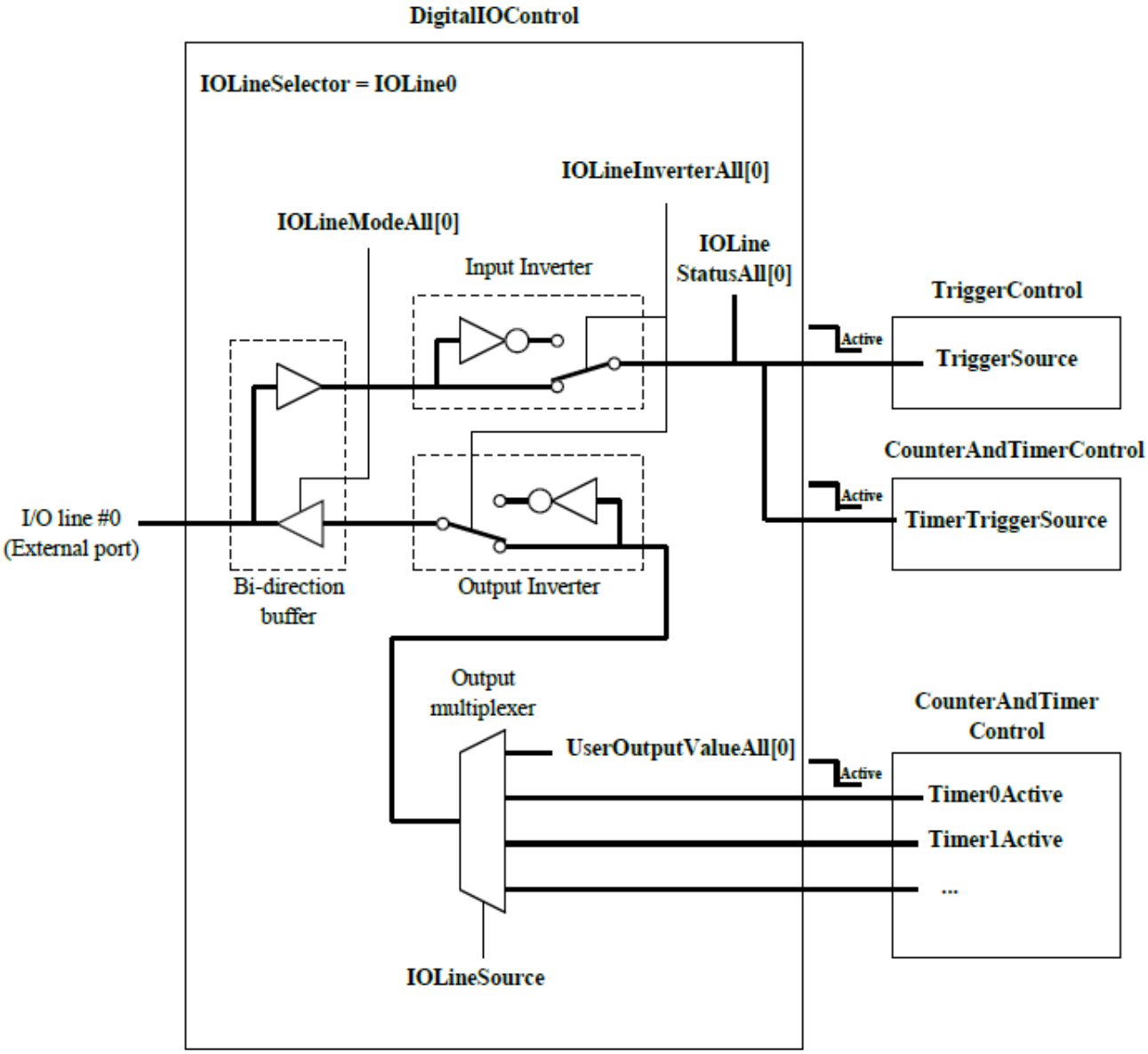

Figure 8: GPIO interface (for GPIO0) and functionality [IIDC2 Digital Camera Control Specification Version 1.2.0].

On top of this control interface it is again worth to mention that also additional muxes are added to use the same interface for the SPI master (as explained in the previous section).

8.6 Test Pattern Generator

MAG-CXP00002-NP has an on-chip test pattern generator responsible for generating test images and the required sync signals (FRAME_VALID, DATA_VALID and LINE_VALID) independently of the imager connected to it. This allows to test the internal functionality and cable transmission, without connecting an actual imager to it. The images generated from this test pattern generator are defined by the GenICam standard, in addition to some vendor-specific images. The selection of the image is done through the *TestPattern_Value* register (0x101fc). The table below gives an overview of the different supported patterns.

Table 2: Overview of test patterns that can be generated.

TestPattern_Value	Image type
0	No test image, image from the pixel array
1	Black test image
2	White test image
3	Grey55 test image
4	GreyAA test image
16	GrayHorizontalRamp
17	GrayVerticalRamp
48	ColorBar
49	GreyScaleChart
120	VendorSpecific0 test image
121	VendorSpecific1 test image
122	VendorSpecific2 test image
123	VendorSpecific3 test image
124	VendorSpecific4 test image
125	VendorSpecific5 test image

The test patterns from the standard can be found back in the standard, and their names are in principle self-descriptive.

For the VendorSpecificx patterns, an overview can be found below:

- **VendorSpecific0**: consists of 6 regions. The top starts with white (w) followed with black (b). This is followed by "wbwb".
- **VendorSpecific1**: consists of 6 regions. The top starts with black, followed by "wbwbw".
- **VendorSpecific2**: consists of 8 regions. The top starts with black followed by "wbwbwbw".
- **VendorSpecific3**: consists of 8 regions. The top starts with black followed by 6 gray values with top being most black-like and bottom being most white-like. The bottom most region is white.
- **VendorSpecific4**: starts with black and switches between black and white every two pixels.
- **VendorSpecific5**: test image is a running counter. This is a test image which is showing the number of the frame. As such it is a moving image.

This test pattern generator supports extra control setting to manipulate the test image. In addition to the selection of the patterns the user can also choose between different image sizes, pixel size and other control settings listed in the table below:

Table 3: Additional configurations for the test pattern generation.

Register	Image type
TestPattern_Value	See previous table
select_endian	MSB/LSB bit order swap
test_pattern_rst_cnt	Reset of the running counter in the test image
ReverseX_Value	Image reversing in the X direction.
ReverseY_Value	Image reversing in the X direction.

Copyright © Magics Technologies NV

PixelSize_Value	10 or 12 bits pixels
ImageSize_Width	Image width register
ImageSize_Height	Image width register

8.7 GenICam compliance and bootstrap FSM

The register map of MAG-CXP00002 implements the main bootstrap registers required from the CXP (/GenICam) standard in addition to all the other registers needed for analog configuration and trimming. The latter are not accessible by the customer and will be programmed by Magics by means of on-chip OTP eFuses. Next, the extra interfaces of the digital blocks such as the GPIOs are implemented according to the IIDC2 standard wherefrom the entry point can be found at the address 0x1C. Section 11.1 gives an overview of all the registers used in the ASIC which are accessible to the customer.

The on-chip bootstrap FSM is responsible for the synchronization of the important settings between the serializer ASIC and any external imager that is compliant with the GenICam standard (e.g. MAG-IMG001X1-NC). This guarantees an alignment between configuration settings such as image size, image format pixel format, mirroring features, Bayer pattern configuration, etc. The bootstrap FSM takes care of transferring the right configuration data to the externally connected imager, while also reading back the settings to be used in his own register. This is done by means of the dedicated SPI master. It also means that the user seems to be communicating to one device only and is blind for all the action happening in the bootstrap FSM. Note that GenICam compliance of the image sensor is mandatory to have the mechanism functioning correctly. More information on how this copying mechanism works in application when an imager is connected, can be found in section 9.2.

8.8 Debug SPI slave interface

There is a debug SPI slave interface implemented, which in principle should not be used by the customer, but could be used for debugging. Therefore, for completeness, it is described here. The SPI slave interface is used as a debug interface for accessing the different registers of the regbank of MAG-CXP00002-NP and is totally independent of the system clock. It is a 96-bits SPI transaction that is operating in mode 0, which means: the serial data is captured on the rising edge and launched on the falling edge of the SPI clock.

An SPI frame for the debug interface contains 96 bits, which are according to the table below.

Table 4: SPI slave frame format

Bits	**[95:64]**	**[63:48]**	**[47:16]**	**[15:0]**
Field Name	Address	Force + Read Synchronization	Data	Write Synchronization
MOSI	Address[31:0]	Force[15:0]	Write Data[31:0]	RNW[15:0]
MISO	0	0	Read Data[31:0]	0

Notes:

- In case of a read, the SPI transaction could be aborted after the Data field. Resulting in an SPI frame of only 64 bits.
- Write Synchronization: Similar to the Force field, only the first bit of the field is evaluated (bit [15]). But for simplicity in case of a read, all bits [15:0] could be set to 1, or in case of a write, all bits [15:0] can be set to 0. The reason to have 16 RNW bits is for synchronization purposes.
- **IMPORTANT: When Debug Slave SPI interface is not used, make sure to connect pins correctly (see Table 1). It is important to add a pull-up resistor of 4.7kOhm to the SLAVE_CSB pin for correct operation!**

Copyright © Magics Technologies NV

9. Typical applications

9.1 Application with a generic camera chip and a frame grabber

MAG-CXP00002-NP is a radiation tolerant camera interface. The following design is an exemplary application of MAG-CXP00002-NP.

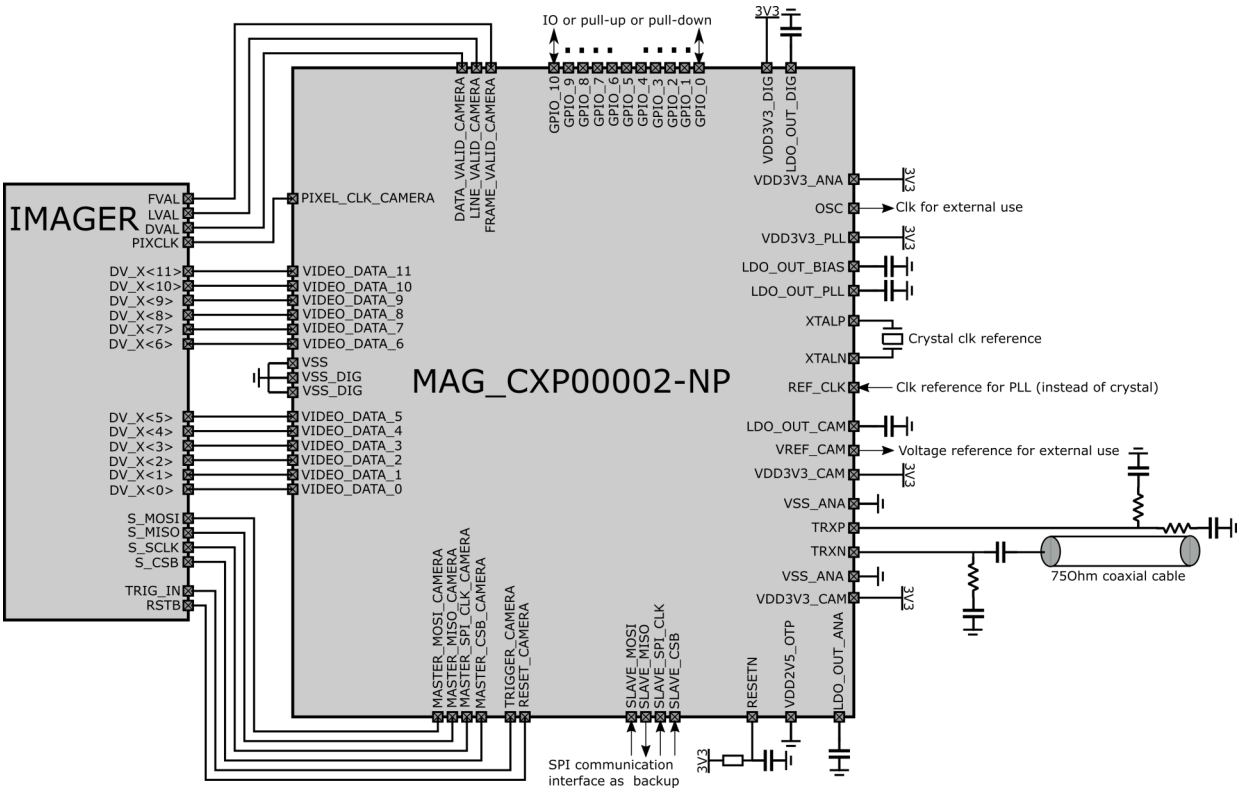

Figure 9: Application scenario for the MAG-CXP00002-NP.

The MAG-CXP00002-NP provides the connection between the frame grabber and the camera chip. All captured image data is sent in a parallel bus to the serializer, along with the frame/line/data valid signals required to proper acquisition of individual pixel/line or entire frame data. Along with these signals, the pixel clock used in the camera chip is also sent to the serializer to provide a means for data sampling. According to the GenICam standard, both chips are treated as a single device from the point of view of the user and thus both can be programmed through a single uplink channel that shares the same coaxial cable as the downlink communication between the serializer and the frame grabber. The properties of uplink, downlink, driver and hybrid circuits that handle them are set according to the CXP 2.0 standard. Serialized and encoded video data is sent via the coaxial cable to the frame grabber, while any configuration of either the MAG-CXP00002-NP serializer or the camera chip is sent by the frame grabber via the same coaxial cable to the serializer chip. When necessary, the device side can also be powered using the same coaxial cable as the one used for up- and downlink.

Table 1 lists the requirements for the external components that need to be connected to the pins seen in Figure 9. The sub-sections below will provide further details on the connections between the serializer, the camera and the frame grabber.

9.1.1 Connection to the power supplies

The serializer chip only requires 3.3V supplies, which power internal LDOs which in turn generate the 1.2V core level voltage. The LDO outputs (LDO_DIG_OUT, LDO_ANA_OUT, LDO_PLL_OUT, LDO_BIAS_OUT) are to be connected to external capacitors for stability (for capacitance values, refer to Table 1). These pins can also be used, if necessary, to override the internally generated 1.2V of the LDOs. Next to a few dedicated ground pins, most of the chip grounds are

Copyright © Magics Technologies NV

connected to the thermal pad of the QFN-64 package that houses MAG-CXP00002-NP. The LDO_OUT_CAM and VREF_CAM are not required for the internal use of the serializer but instead serve as power supply and voltage reference for the camera chip, respectively. The OTP power supply VDD2V5_OTP is only needed when burning the OTP fuses and needs to be grounded in normal application.

9.1.2 Connection to the camera chip

The parallel data from the camera chip is received via the pins VIDEO_DATA 11 to 0. Additionally, the pins PIXEL_CLK_CAM, DATA_VALID_CAM, LINE_VALID_CAM and FRAME_VALID_CAM are also connected to the camera chip. The diagram seen in Figure 6 can serve as an example on the timing of these signals.

The master SPI (MASTER_MOSI_CAM, MASTER_MISO_CAM, MASTER_SPI_CLK_CAM, MASTER_CSB_CAM) is the dedicated configuration interface between the serializer and the camera and can be used to configure the camera chip. More information on how to communicate with the camera device via ProximaV2 according to the GenICam standard can be found under section 8.7 and in the appendix.

In addition to the pins used for transferring data between the serializer and the camera chip, MAG-CXP00002-NP also provides a 1.8V regulated power supply (VDD1V8_CAM) and a 1.2V constant voltage reference (VREF_CAM) to the camera chip it is connected to. However, note that the VDD1V8_CAM supply can only deliver up to 10mA and is therefore not suitable for Magics' imager MAG-IMG001X1-NC. A pin for externally triggering and resetting the camera chip can also be found at TRIGGER_CAM and RESET_CAM, respectively.

9.1.3 Connection to the host

The connection between the MAG-CXP00002-NP and the frame grabber is a coaxial cable with a characteristic resistance of 75Ω according to the CoaXPress 2.0 standard. This cable is connected to pin TRXN, while TRXP is terminated locally on the PCB using a 75Ω resistance. In case the PoC option is used, DC voltage sources and PoC filters can be connected at the host and the device side, respectively. More information on this can be found under section 8.3.

9.1.4 Connection to the clock

The clock reference circuit providing the input to the PLL supports either an external quartz oscillator connected to pins XTALN and XTALP or an external clock directly connected to the pin REF_CLK. The latter option could provide a better 1/f noise performance. The connected clock signal can be either a sine or square wave and can have amplitudes between 1.2V-3.3V since the signal can be resistively divided. The input divider of the PLL itself can function with frequencies between 10-40MHz. The default external clock signal should be at 20MHz.

Important note-1: the user can only one of the two options! If the XTAL oscillator functionality is used, the REF_CLK input pins needs to be grounded, to avoid any disturbance. Vice versa if the REF_CLK input pin is used to supply an external reference clock of 20 MHz.

Important note-2: the REF_CLK input is internally loaded with a 330 Ohm resistive divider.

9.1.5 Optional connections

The serializer chip also has 11 GPIO pins in the top row of the package and 4 pins for a slave SPI interface that was implemented for debugging purposes and normally do not need to be used by the customer.

9.2 Operating the serializer together with an imager

The MAG-CXP00002-NP serializer ASIC can in principle be used to interface with any imager which sends out parallel video data, as described in section 8.2. When it is GenICam compliant, it really integrates seamlessly, because then the chip set can be considered as a single device from a user point of view. The latter is the case when the serializer is interfaced with the Magics Full HD imager product MAG-IMG001X1-NC. As is already depicted in section 8.2, the functionality to reset and trigger the imager with hardware pins is already foreseen by the serializer. The register maps of both products are built in such a way that they interface perfectly by the use of the bootstrap FSM integrated in the serializer.

At the start-up of the devices, when connected to a CXP host/frame grabber, after a proper connection detection and setup, a *connectionReset* is initiated (see section 8.1). This means that the imager is reset by the serializer through the RESET_CAM pin. After that, the host will come and read the serializer to identify where all imager configuration registers

Copyright © Magics Technologies NV

can be found. This is done by reading all the *'IIDC2EntryImager_*'* addresses, starting from address 0x6030 in the register map of the serializer. These registers hold the relative address to *IIDC2EntryImager* section (0x6030) of each corresponding section of the registers which are implemented. If there is no imager connected to it, it holds the address of the corresponding sections in the serializer itself. If there is an imager connected to it, it holds the addresses of the address space in the serializer register map which holds a copy of the register map of the imager connected to it. This address space starts at address 0x1000_0000.

When an imager is detected correctly, the bootstrap FSM goes reading all the required configuration settings from the imager. Examples are the imager size, the bit depth, the color mode, etc. In general: the register map of the imager will be memory mapped into the address space of the serializer. This is depicted in Figure 10.

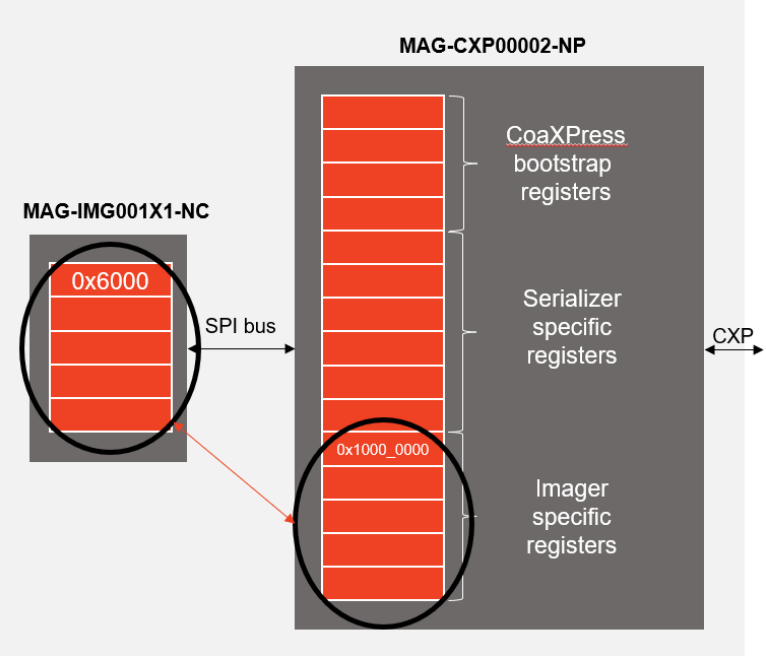

Figure 10: Memory mapping between the imager and the serializer.

When a register in the address space 0x1000_0000 is addressed by the user, the serializer knows which corresponding address to access in the imager to write or read the right data in the imager. So any access to this address range will initiate an SPI transaction to the imager through the dedicated imager master SPI. When the synchronization block notices that a setting is changed that also the serializer needs to be aware of, the setting is also copied to the internal registers of MAG-CXP00002-NP. This results in the case that the user only needs to know of one register map, i.e. the one from the serializer.

When a COTS frame gabber (CXP host) is used which implements the GenICam standard, all of this is actually invisible to the customer. The frame grabber will come and read the address for each configuration setting (*'IIDC2EntryImager_*'*) and will from then on use these configuration setting addresses. In the case of a custom implementation, it is however important to understand the mechanism. An example of an address access to the register map is given below.

Assume the user want to modify the width of the imager (cfr. *'ImageSize_Width'*). This configuration register is present at address 0x7398 in the MAG-IMG001X1-NC imager. After start-up, this register is however copied to the serializer at address **0x1000_1398**, since the address 0x6000 in the imager corresponds to the address 0x1000_0000 in the serializer:

0x7398 – 0x6000 + 0x1000_0000 = 0x1000_1398

So if the user wants to access this register in the imager, he needs to access register 0x1000_1398 in the serializer, and the serializer will take care of the rest.

Copyright © Magics Technologies NV

10. Package information

10.1 Plastic QFN-64

The selected package is a molded QFN-64 with a dimension of 9x9m. A mechanical drawing of the package can be found below. For the pinout it is referred to section 6.

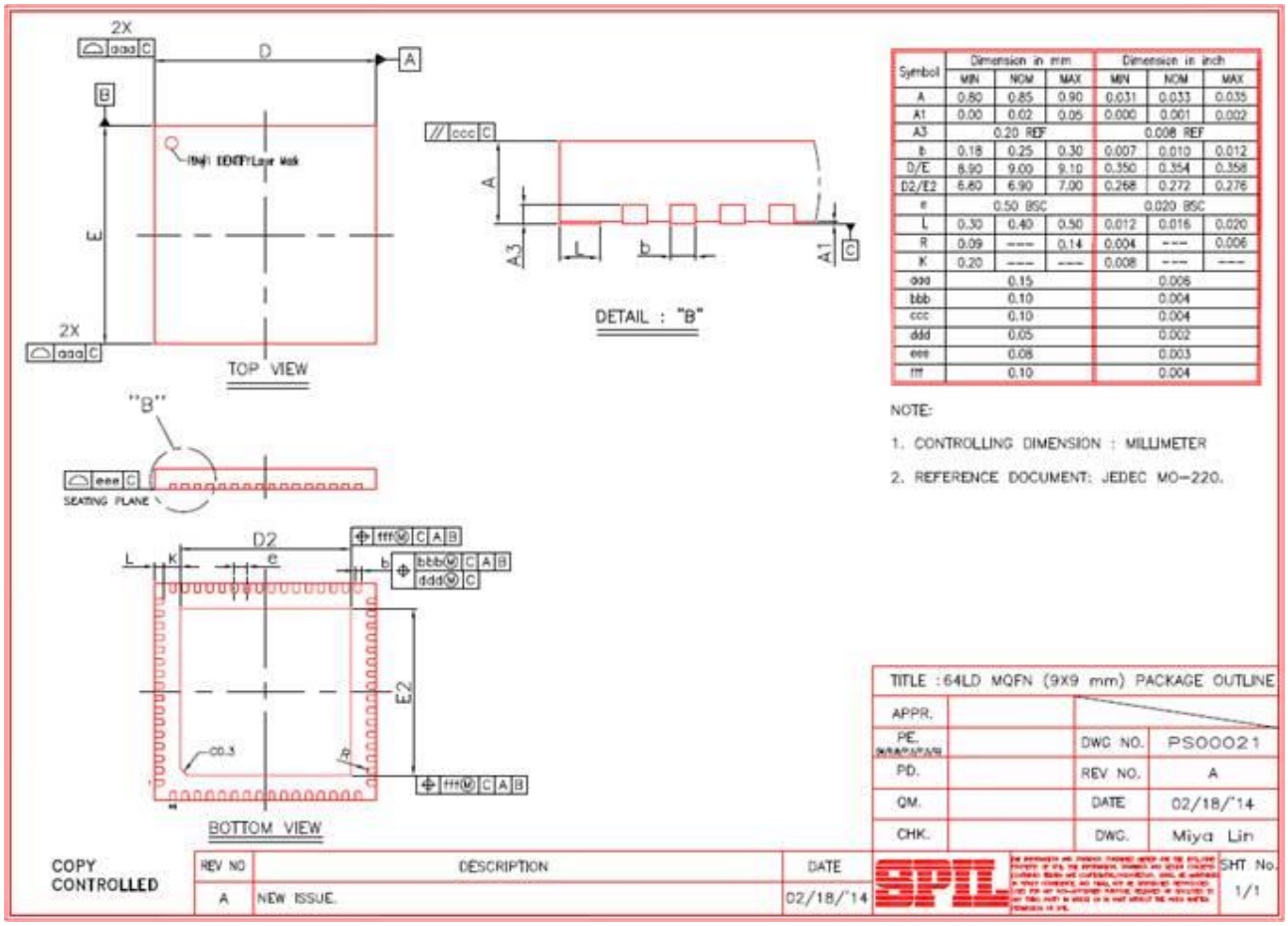

Symbol	Dimension in mm MIN	NOM	MAX	Dimension in inch MIN	NOM	MAX
A	0.80	0.85	0.90	0.031	0.033	0.035
A1	0.00	0.02	0.05	0.000	0.001	0.002
A3	0.20 REF			0.008 REF		
b	0.18	0.25	0.30	0.007	0.010	0.012
D/E	8.90	9.00	9.10	0.350	0.354	0.358
D2/E2	6.80	6.90	7.00	0.268	0.272	0.276
e	0.50 BSC			0.020 BSC		
L	0.30	0.40	0.50	0.012	0.016	0.020
R	0.09	----	0.14	0.004	----	0.006
K	0.20	----	----	0.008	----	----
aaa	0.15			0.006		
bbb	0.10			0.004		
ccc	0.10			0.004		
ddd	0.05			0.002		
eee	0.08			0.003		
fff	0.10			0.004		

Figure 11: Mechanical drawing of the selected QFN-64 package.

11. Register bank

The register bank is built in such a way that it supports the GenICam and IIDC2 standard when assembling the serializer in a camera. When used as a chip set with the imager product MAG-IMG001X1-NC, a full GenICam and IIDC2 compliant product can be built. As a result of this is the register map quite elaborate. However, quite some entries are constants and read only.

There are different types of registers defined in the map, and they are listed below:

- **Constant**: registers which hold a constant value and are used as information for the user or for the CXP host to understand the configuration of the device.
- **Configuration**: configuration registers which are accessible to the customer.
- **Configuration_otp**: configuration registers which are accessible to the customer, but which are programmed to a default state by Magics for optimal operation of the device.
- **Input**: read-only values which get their input from somewhere else, such as analog status signals.
- **Trigger**: these register values are used to trigger an action (e.g. *connectionReset*)
- **State**: type of configuration register which can be controlled by the user, but which can also be overwritten by the digital core.

Below the reader can find an overview of the full register map in section 11.1. For the more detailed register map, we refer to section 11.2 for the register settings which are not of the type constant and to section 11.3 for the register bits which are of the type constant. Note that for configurable settings, such as features such as windowing, sub-sampling, exposure times, etc., section 11.2 describes how these settings can be configured. However, typically these settings have a default value, but also a corresponding minimum and maximum value. These corresponding minimum and maximum values can be found back in the overview, but also in the constants section in section 11.3. We refer to the register overview in the next section to have a full view of all settings and corresponding constants.

11.1 Register overview

REG	SETTING	REGISTER BIT(S)
0x0	XML_Settings_Standard	31 - 0
0x4	XML_Settings_Revision	31 - 0
0x8	XML_Settings_XmlManifestSize	31 - 0
0xc	XML_Settings_XmlManifestSelector	31 - 0
0x10	XML_Settings_XmlVersion	31 - 0
0x14	XML_Settings_XmlSchemaVersion	31 - 0
0x18	XML_Settings_XmlUrlAddress	31 - 0
0x1c	XML_Settings_IidcAddress	31 - 0
0x2000	Device_DeviceVendorName	31 - 0
0x2004	Device_DeviceVendorName	31 - 0
0x2008	Device_DeviceVendorName	31 - 0
0x200c	Device_DeviceVendorName	31 - 0
0x2010	Device_DeviceVendorName	31 - 0
0x2014	Device_DeviceVendorName	31 - 0
0x2018	Device_DeviceVendorName	31 - 0
0x201c	Device_DeviceVendorName	31 - 0
0x2020	Device_DeviceModelName	31 - 0
0x2024	Device_DeviceModelName	31 - 0
0x2028	Device_DeviceModelName	31 - 0
0x202c	Device_DeviceModelName	31 - 0
0x2030	Device_DeviceModelName	31 - 0
0x2034	Device_DeviceModelName	31 - 0
0x2038	Device_DeviceModelName	31 - 0
0x203c	Device_DeviceModelName	31 - 0
0x2040	Device_DeviceManufacturerInfo	31 - 0
0x2044	Device_DeviceManufacturerInfo	31 - 0
0x2048	Device_DeviceManufacturerInfo	31 - 0
0x204c	Device_DeviceManufacturerInfo	31 - 0
0x2050	Device_DeviceManufacturerInfo	31 - 0
0x2054	Device_DeviceManufacturerInfo	31 - 0
0x2058	Device_DeviceManufacturerInfo	31 - 0

Copyright © Magics Technologies NV

MAG-CXP00002-NP- CoaXPress Serializer ASIC

0x205c	Device_DeviceManufacturerInfo	31 - 0
0x2060	Device_DeviceManufacturerInfo	31 - 0
0x2064	Device_DeviceManufacturerInfo	31 - 0
0x2068	Device_DeviceManufacturerInfo	31 - 0
0x206c	Device_DeviceManufacturerInfo	31 - 0
0x2070	Device_DeviceVersion	31 - 0
0x2074	Device_DeviceVersion	31 - 0
0x2078	Device_DeviceVersion	31 - 0
0x207c	Device_DeviceVersion	31 - 0
0x2080	Device_DeviceVersion	31 - 0
0x2084	Device_DeviceVersion	31 - 0
0x2088	Device_DeviceVersion	31 - 0
0x208c	Device_DeviceVersion	31 - 0
0x20b0	Device_DeviceSerialNumber	31 - 0
0x20b4	Device_DeviceSerialNumber	31 - 0
0x20b8	Device_DeviceSerialNumber	31 - 0
0x20bc	Device_DeviceSerialNumber	31 - 0
0x20c0	Device_DeviceUserId	31 - 0
0x20c4	Device_DeviceUserId	31 - 0
0x20c8	Device_DeviceUserId	31 - 0
0x20cc	Device_DeviceUserId	31 - 0
0x20d0	Device_GenDcPrefetchDescriptorAddress	31 - 0
0x20d4	Device_GenDcPrefetchDescriptorSize	31 - 0
0x20d8	Device_GenDcFlowTableAddress	31 - 0
0x20dc	Device_GenDcFlowTableSize	31 - 0
0x20e0	Device_GenDcContainerSize	31 - 0
0x3000	SettingAddress_WidthAddress	31 - 0
0x3004	SettingAddress_HeightAddress	31 - 0
0x3008	SettingAddress_AcquisitionModeAddress	31 - 0
0x300c	SettingAddress_AcquistionStartAddress	31 - 0
0x3010	SettingAddress_AcquistionStopAddress	31 - 0
0x3014	SettingAddress_PixelFormatAddress	31 - 0
0x3018	SettingAddress_DeviceTapGeometryAddress	31 - 0
0x301c	SettingAddress_Image1StreamIDAddress	31 - 0
0x4000	StreamSettings_ConnectionReset	31 - 0
0x4004	StreamSettings_DeviceConnectionID	31 - 0
0x4008	StreamSettings_MasterHostConnectionID	31 - 0
0x400c	StreamSettings_ControlPacketSizeMax	31 - 0
0x4010	StreamSettings_StreamPacketSizeMax	31 - 0
0x4014	StreamSettings_ConnectionConfig	31 - 0
0x4018	StreamSettings_ConnectionConfigDefault	31 - 0
0x401c	StreamSettings_TestMode	0
0x4020	StreamSettings_TestErrorCountSelector	31 - 0
0x4024	StreamSettings_TestErrorCount	31 - 0
0x4028	StreamSettings_TestPacketCountTxLsb	31 - 0
0x402c	StreamSettings_TestPacketCountTxMsb	31 - 0
0x4030	StreamSettings_TestPacketCountRxLsb	31 - 0
0x4034	StreamSettings_TestPacketCountRxMsb	31 - 0
0x4038	StreamSettings_ElectricalComplianceTest	31 - 0
0x403c	StreamSettings_CapabilityRegister	31 - 0
0x4040	StreamSettings_FeatureControlRegister	31 - 0
0x4044	StreamSettings_VersionsSupported	31 - 0
0x4048	StreamSettings_VersionUsed	31 - 0
0x404c	StreamSettings_LinkSharingStatus	31 - 0
0x4050	StreamSettings_LinkSharingHorizontalStripeCount	31 - 0
0x4054	StreamSettings_LinkSharingVerticalStripeCount	31 - 0
0x4058	StreamSettings_LinkSharingHorizontalOverlap	31 - 0
0x405c	StreamSettings_LinkSharingVerticalOverlap	31 - 0
0x4060	StreamSettings_LinkSharingDuplicateStripe	31 - 0
0x6000	AcquisitionSettings_AcquisitionMode	3 - 0
0x6004	AcquisitionSettings_AcquisitionStart	0
0x6008	AcquisitionSettings_AcquisitionStop	0
0x600c	AcquisitionSettings_PixelFormat	31 - 0
0x6010	AcquisitionSettings_DeviceTapGeometry	31 - 0

Copyright © Magics Technologies NV

MAG-CXP00002-NP- CoaXPress Serializer ASIC

0x6014	AcquisitionSettings_Image1StreamID	31 - 0
0x6018	AcquisitionSettings_HeartBeatTime	31 - 0
0x601c	AcquisitionSettings_HeartBeatTime	31 - 0
0x6030	IIDC2EntryImager_Keyword	31 - 0
0x6034	IIDC2EntryImager_SubMinorVersionNumber	7 - 0
0x6034	IIDC2EntryImager_MinorVersionNumber	15 - 8
0x6034	IIDC2EntryImager_MajorVersionNumber	23 - 16
0x6038	IIDC2EntryImager_NumberOfCategoryBlocks	15 - 0
0x6040	IIDC2EntryImager_OffsetForXmlManifestTable	31 - 0
0x6050	IIDC2EntryImager_DeviceControl	31 - 0
0x6054	IIDC2EntryImager_TransportLayerControl	31 - 0
0x6058	IIDC2EntryImager_ImageFormatControl	31 - 0
0x605c	IIDC2EntryImager_AcquisitionControl	31 - 0
0x6060	IIDC2EntryImager_LuminanceControl	31 - 0
0x6064	IIDC2EntryImager_ChromaControl	31 - 0
0x6068	IIDC2EntryImager_LUTControl	31 - 0
0x606c	IIDC2EntryImager_TriggerControl	31 - 0
0x6070	IIDC2EntryImager_UserSetControl	31 - 0
0x6074	IIDC2EntryImager_DigitalIOControl	31 - 0
0x6078	IIDC2EntryImager_CounterAndTimerControl	31 - 0
0x607c	IIDC2EntryImager_EventControl	31 - 0
0x6080	IIDC2EntryImager_ChunkControl	31 - 0
0x6084	IIDC2EntryImager_LightControl	31 - 0
0x60b0	IIDC2EntryImager_VendorUniqueControl1	31 - 0
0x60b4	IIDC2EntryImager_VendorUniqueControl2	31 - 0
0x60b8	IIDC2EntryImager_VendorUniqueControl3	31 - 0
0x60bc	IIDC2EntryImager_VendorUniqueControl4	31 - 0
0x60c0	IIDC2EntryImager_VendorUniqueControl5	31 - 0
0x60c4	IIDC2EntryImager_VendorUniqueControl6	31 - 0
0x60c8	IIDC2EntryImager_VendorUniqueControl7	31 - 0
0x60cc	IIDC2EntryImager_VendorUniqueControl8	31 - 0
0x60d0	Analog_SizeOfCategoryBlock	23 - 0
0x60d0	Analog_CategoryBlockNumber	31 - 24
0x60f0	Analog_NoSpecifyInq	0
0x60f0	Analog_ManualInq	1
0x60f0	Analog_AutoInq	2
0x60f0	Analog_AutoOnceInq	3
0x60f0	Analog_DefaultInq	4
0x60f0	Analog_ValueType	23 - 16
0x60f0	Analog_Readable	24
0x60f0	Analog_Writable	25
0x60f0	Analog_UserSetLoadable	26
0x60f0	Analog_Active	30
0x60f0	Analog_Implemented	31
0x60f4	Analog_OffsetForExpanded	31 - 0
0x60f8	Analog_Control	3 - 0
0x60fc	Analog_NumberOfElements	30 - 0
0x60fc	Analog_MoreDimension	31
0x6100	Analog_chip_id	7 - 0
0x6104	Analog_version_reg	7 - 0
0x6108	Analog_date_0	7 - 0
0x610c	Analog_date_1	7 - 0
0x62a8	Analog_ctrl_video_in_sampling	3 - 0
0x62d0	Analog_mode_select	1 - 0
0x62d4	Analog_black_rows_en	2
0xa000	XMLURL	31 - 0
0xa004	XMLURL	31 - 0
0xa008	XMLURL	31 - 0
0xa00c	XMLURL	31 - 0
0xa010	XMLURL	31 - 0
0xa014	XMLURL	31 - 0
0xa018	XMLURL	31 - 0
0xa01c	XMLURL	31 - 0
0xa020	XMLURL	31 - 0

Copyright © Magics Technologies NV

MAG-CXP00002-NP- CoaXPress Serializer ASIC

0xa024	XMLURL	31 - 0
0xa028	XMLURL	31 - 0
0xa02c	XMLURL	31 - 0
0xb000	AcquisitionControl_SizeOfCategoryBlock	23 - 0
0xb000	AcquisitionControl_CategoryBlockNumber	31 - 24
0xb020	AcquisitionCommand_ValueType	23 - 16
0xb020	AcquisitionCommand_Readable	24
0xb020	AcquisitionCommand_Writable	25
0xb020	AcquisitionCommand_UserSetLoadable	26
0xb020	AcquisitionCommand_Active	30
0xb020	AcquisitionCommand_Implemented	31
0xb024	AcquisitionCommand_OffsetForExpanded	31 - 0
0xb028	AcquisitionCommand_Control	3 - 0
0xb038	AcquisitionCommand_Abort	0
0xb038	AcquisitionCommand_Stop	1
0xb038	AcquisitionCommand_Continuous	8
0xb038	AcquisitionCommand_MultiFrame	9
0xb038	AcquisitionCommand_ImageBufferRead	10
0xb038	AcquisitionCommand_Retransmit	16
0xb03c	AcquisitionCommand_Value	3 - 0
0xb040	AcquisitionFrameCount_ValueType	23 - 16
0xb040	AcquisitionFrameCount_Readable	24
0xb040	AcquisitionFrameCount_Writable	25
0xb040	AcquisitionFrameCount_UserSetLoadable	26
0xb040	AcquisitionFrameCount_Active	30
0xb040	AcquisitionFrameCount_Implemented	31
0xb044	AcquisitionFrameCount_OffsetForExpanded	31 - 0
0xb048	AcquisitionFrameCount_Control	31 - 0
0xb054	AcquisitionFrameCount_Min	31 - 0
0xb058	AcquisitionFrameCount_Max	31 - 0
0xb05c	AcquisitionFrameCount_Value	15 - 0
0xb060	ImageBufferMode_Implemented	31
0xb080	ImageBufferFrameCount_Implemented	31
0xb0a0	AcquisitionFrameRate_NoSpecifyInq	0
0xb0a0	AcquisitionFrameRate_ManualInq	1
0xb0a0	AcquisitionFrameRate_DefaultInq	4
0xb0a0	AcquisitionFrameRate_ValueType	23 - 16
0xb0a0	AcquisitionFrameRate_Readable	24
0xb0a0	AcquisitionFrameRate_Writable	25
0xb0a0	AcquisitionFrameRate_UserSetLoadable	26
0xb0a0	AcquisitionFrameRate_Active	30
0xb0a0	AcquisitionFrameRate_Implemented	31
0xb0a4	AcquisitionFrameRate_OffsetForExpanded	31 - 0
0xb0a8	AcquisitionFrameRate_Control	3 - 0
0xb0ac	AcquisitionFrameRate_Mult	31 - 0
0xb0b0	AcquisitionFrameRate_Div	31 - 0
0xb0b4	AcquisitionFrameRate_Min	31 - 0
0xb0b8	AcquisitionFrameRate_Max	31 - 0
0xb0bc	AcquisitionFrameRate_Value	8 - 0
0xb0c0	AcquisitionFrameInterval_Implemented	31
0xc400	VendorUniqueBootstrapFSM_SizeOfCategoryBlock	23 - 0
0xc400	VendorUniqueBootstrapFSM_CategoryBlockNumber	31 - 24
0xc420	VendorUniqueBootstrapFSM_NoSpecifyInq	0
0xc420	VendorUniqueBootstrapFSM_ManualInq	1
0xc420	VendorUniqueBootstrapFSM_AutoInq	2
0xc420	VendorUniqueBootstrapFSM_AutoOnceInq	3
0xc420	VendorUniqueBootstrapFSM_DefaultInq	4
0xc420	VendorUniqueBootstrapFSM_ValueType	23 - 16
0xc420	VendorUniqueBootstrapFSM_Readable	24
0xc420	VendorUniqueBootstrapFSM_Writable	25
0xc420	VendorUniqueBootstrapFSM_UserSetLoadable	26
0xc420	VendorUniqueBootstrapFSM_Active	30
0xc420	VendorUniqueBootstrapFSM_Implemented	31
0xc424	VendorUniqueBootstrapFSM_OffsetForExpanded	31 - 0

Copyright © Magics Technologies NV

MAG-CXP00002-NP- CoaXPress Serializer ASIC

0xc428	VendorUniqueBootstrapFSM_Control	3 - 0
0xc42c	VendorUniqueBootstrapFSM_NumberOfElements	30 - 0
0xc42c	VendorUniqueBootstrapFSM_MoreDimension	31
0xc430	VendorUniqueBootstrapFSM_iidc_entry_offset_local	31 - 0
0xc440	VendorUniqueBootstrapFSM_spi_master_clock_div	15 - 0
0xd400	VendorUniqueSPIGPIO_SizeOfCategoryBlock	23 - 0
0xd400	VendorUniqueSPIGPIO_CategoryBlockNumber	31 - 24
0xd420	VendorUniqueSPIGPIO_NoSpecifyInq	0
0xd420	VendorUniqueSPIGPIO_ManualInq	1
0xd420	VendorUniqueSPIGPIO_AutoInq	2
0xd420	VendorUniqueSPIGPIO_AutoOnceInq	3
0xd420	VendorUniqueSPIGPIO_DefaultInq	4
0xd420	VendorUniqueSPIGPIO_ValueType	23 - 16
0xd420	VendorUniqueSPIGPIO_Readable	24
0xd420	VendorUniqueSPIGPIO_Writable	25
0xd420	VendorUniqueSPIGPIO_UserSetLoadable	26
0xd420	VendorUniqueSPIGPIO_Active	30
0xd420	VendorUniqueSPIGPIO_Implemented	31
0xd424	VendorUniqueSPIGPIO_OffsetForExpanded	31 - 0
0xd428	VendorUniqueSPIGPIO_Control	3 - 0
0xd42c	VendorUniqueSPIGPIO_NumberOfElements	30 - 0
0xd42c	VendorUniqueSPIGPIO_MoreDimension	31
0xd430	VendorUniqueSPIGPIO_trigger	0
0xd430	VendorUniqueSPIGPIO_busy	1
0xd434	VendorUniqueSPIGPIO_divider	15 - 0
0xd438	VendorUniqueSPIGPIO_transaction_size	5 - 0
0xd43c	VendorUniqueSPIGPIO_ssel	3 - 0
0xd440	VendorUniqueSPIGPIO_data_mosi	31 - 0
0xd448	VendorUniqueSPIGPIO_data_mosi	31 - 0
0xd44c	VendorUniqueSPIGPIO_data_miso	31 - 0
0xd450	VendorUniqueSPIGPIO_data_miso	31 - 0
0xd454	VendorUniqueSPIGPIO_spi_enable	0
0xe000	DigitalIOControl_SizeOfCategoryBlock	23 - 0
0xe000	DigitalIOControl_CategoryBlockNumber	31 - 24
0xe020	IOLineModeAll_NoSpecifyInq	0
0xe020	IOLineModeAll_ManualInq	1
0xe020	IOLineModeAll_AutoInq	2
0xe020	IOLineModeAll_AutoOnceInq	3
0xe020	IOLineModeAll_DefaultInq	4
0xe020	IOLineModeAll_ValueType	23 - 16
0xe020	IOLineModeAll_Readable	24
0xe020	IOLineModeAll_Writable	25
0xe020	IOLineModeAll_UserSetLoadable	26
0xe020	IOLineModeAll_Active	30
0xe020	IOLineModeAll_Implemented	31
0xe024	IOLineModeAll_OffsetForExpanded	31 - 0
0xe028	IOLineModeAll_Control	3 - 0
0xe02c	IOLineModeAll_BitWriteable	31 - 0
0xe030	IOLineModeAll_Value	10 - 0
0xe040	IOLineInverterAll_NoSpecifyInq	0
0xe040	IOLineInverterAll_ManualInq	1
0xe040	IOLineInverterAll_AutoInq	2
0xe040	IOLineInverterAll_AutoOnceInq	3
0xe040	IOLineInverterAll_DefaultInq	4
0xe040	IOLineInverterAll_ValueType	23 - 16
0xe040	IOLineInverterAll_Readable	24
0xe040	IOLineInverterAll_Writable	25
0xe040	IOLineInverterAll_UserSetLoadable	26
0xe040	IOLineInverterAll_Active	30
0xe040	IOLineInverterAll_Implemented	31
0xe044	IOLineInverterAll_OffsetForExpanded	31 - 0
0xe048	IOLineInverterAll_Control	3 - 0
0xe04c	IOLineInverterAll_BitWriteable	31 - 0
0xe050	IOLineInverterAll_Value	10 - 0

Copyright © Magics Technologies NV

MAG-CXP00002-NP- CoaXPress Serializer ASIC

0xe060	IOLineStatusAll_NoSpecifyInq	0
0xe060	IOLineStatusAll_ManualInq	1
0xe060	IOLineStatusAll_AutoInq	2
0xe060	IOLineStatusAll_AutoOnceInq	3
0xe060	IOLineStatusAll_DefaultInq	4
0xe060	IOLineStatusAll_ValueType	23 - 16
0xe060	IOLineStatusAll_Readable	24
0xe060	IOLineStatusAll_Writable	25
0xe060	IOLineStatusAll_UserSetLoadable	26
0xe060	IOLineStatusAll_Active	30
0xe060	IOLineStatusAll_Implemented	31
0xe064	IOLineStatusAll_OffsetForExpanded	31 - 0
0xe068	IOLineStatusAll_Control	3 - 0
0xe06c	IOLineStatusAll_BitWriteable	31 - 0
0xe070	IOLineStatusAll_Value	10 - 0
0xe080	IOUserOutputValueAll_NoSpecifyInq	0
0xe080	IOUserOutputValueAll_ManualInq	1
0xe080	IOUserOutputValueAll_AutoInq	2
0xe080	IOUserOutputValueAll_AutoOnceInq	3
0xe080	IOUserOutputValueAll_DefaultInq	4
0xe080	IOUserOutputValueAll_ValueType	23 - 16
0xe080	IOUserOutputValueAll_Readable	24
0xe080	IOUserOutputValueAll_Writable	25
0xe080	IOUserOutputValueAll_UserSetLoadable	26
0xe080	IOUserOutputValueAll_Active	30
0xe080	IOUserOutputValueAll_Implemented	31
0xe084	IOUserOutputValueAll_OffsetForExpanded	31 - 0
0xe088	IOUserOutputValueAll_Control	3 - 0
0xe08c	IOUserOutputValueAll_BitWriteable	31 - 0
0xe090	IOUserOutputValueAll_Value	10 - 0
0xe0a0	IOLineSelector_NoSpecifyInq	0
0xe0a0	IOLineSelector_ManualInq	1
0xe0a0	IOLineSelector_AutoInq	2
0xe0a0	IOLineSelector_AutoOnceInq	3
0xe0a0	IOLineSelector_DefaultInq	4
0xe0a0	IOLineSelector_ValueType	23 - 16
0xe0a0	IOLineSelector_Readable	24
0xe0a0	IOLineSelector_Writable	25
0xe0a0	IOLineSelector_UserSetLoadable	26
0xe0a0	IOLineSelector_Active	30
0xe0a0	IOLineSelector_Implemented	31
0xe0a4	IOLineSelector_OffsetForExpanded	31 - 0
0xe0a8	IOLineSelector_Control	3 - 0
0xe0ac	IOLineSelector_ListOfElements	31 - 0
0xe0bc	IOLineSelector_Value	6 - 0
0xe0c0	IOLineSource_NoSpecifyInq	0
0xe0c0	IOLineSource_ManualInq	1
0xe0c0	IOLineSource_AutoInq	2
0xe0c0	IOLineSource_AutoOnceInq	3
0xe0c0	IOLineSource_DefaultInq	4
0xe0c0	IOLineSource_ValueType	23 - 16
0xe0c0	IOLineSource_Readable	24
0xe0c0	IOLineSource_Writable	25
0xe0c0	IOLineSource_UserSetLoadable	26
0xe0c0	IOLineSource_Active	30
0xe0c0	IOLineSource_Implemented	31
0xe0c4	IOLineSource_OffsetForExpanded	31 - 0
0xe0c8	IOLineSource_Control	3 - 0
0xe0cc	IOLineSource_ListOfElements	31 - 0
0xe0dc	IOLineSource_Value	6 - 0
0xf800	TriggerControl_SizeOfCategoryBlock	23 - 0
0xf800	TriggerControl_CategoryBlockNumber	31 - 24
0xf820	TriggerMode_ManualInq	1
0xf820	TriggerMode_DefaultInq	4

Copyright © Magics Technologies NV

MAG-CXP00002-NP- CoaXPress Serializer ASIC

0xf820	TriggerMode_ValueType	23 - 16
0xf820	TriggerMode_Readable	24
0xf820	TriggerMode_Writable	25
0xf820	TriggerMode_UserSetLoadable	26
0xf820	TriggerMode_Active	30
0xf820	TriggerMode_Implemented	31
0xf824	TriggerMode_OffsetForExpanded	31 - 0
0xf828	TriggerMode_Control	3 - 0
0xf82c	TriggerMode_VendorSpecific0	24
0xf82c	TriggerMode_VendorSpecific1	25
0xf82c	TriggerMode_VendorSpecific2	26
0xf82c	TriggerMode_VendorSpecific3	27
0xf82c	TriggerMode_VendorSpecific4	28
0xf82c	TriggerMode_VendorSpecific5	29
0xf82c	TriggerMode_VendorSpecific6	30
0xf82c	TriggerMode_VendorSpecific7	31
0xf838	TriggerMode_Off	0
0xf838	TriggerMode_On	1
0xf83c	TriggerMode_Value	0
0xf860	TriggerSource_ManualInq	1
0xf860	TriggerSource_DefaultInq	4
0xf860	TriggerSource_ValueType	23 - 16
0xf860	TriggerSource_Readable	24
0xf860	TriggerSource_Writable	25
0xf860	TriggerSource_UserSetLoadable	26
0xf860	TriggerSource_Active	30
0xf860	TriggerSource_Implemented	31
0xf864	TriggerSource_OffsetForExpanded	31 - 0
0xf868	TriggerSource_Control	3 - 0
0xf86c	TriggerSource_VendorSpecific0	24
0xf870	TriggerSource_SoftwareTrigger	0
0xf87c	TriggerSource_Value	6 - 0
0xf8c0	SoftwareTrigger_ManualInq	1
0xf8c0	SoftwareTrigger_DefaultInq	4
0xf8c0	SoftwareTrigger_ValueType	23 - 16
0xf8c0	SoftwareTrigger_Readable	24
0xf8c0	SoftwareTrigger_Writable	25
0xf8c0	SoftwareTrigger_UserSetLoadable	26
0xf8c0	SoftwareTrigger_Active	30
0xf8c0	SoftwareTrigger_Implemented	31
0xf8c4	SoftwareTrigger_OffsetForExpanded	31 - 0
0xf8c8	SoftwareTrigger_Control	3 - 0
0xf8d8	SoftwareTrigger_Inactive	0
0xf8d8	SoftwareTrigger_Activetable	1
0xf8dc	SoftwareTrigger_Value	0
0x10000	ImageFormatControl_SizeOfCategoryBlock	23 - 0
0x10000	ImageFormatControl_CategoryBlockNumber	31 - 24
0x10020	ImageFormatSelector_Implemented	31
0x10040	ApplyImageFormat_Implemented	31
0x10060	ImageSize_NoSpecifyInq	0
0x10060	ImageSize_ManualInq	1
0x10060	ImageSize_AutoInq	2
0x10060	ImageSize_AutoOnceInq	3
0x10060	ImageSize_DefaultInq	4
0x10060	ImageSize_ValueType	23 - 16
0x10060	ImageSize_Readable	24
0x10060	ImageSize_Writable	25
0x10060	ImageSize_UserSetLoadable	26
0x10060	ImageSize_Active	30
0x10060	ImageSize_Implemented	31
0x10064	ImageSize_OffsetForExpanded	31 - 0
0x10068	ImageSize_Control	3 - 0
0x1006c	ImageSize_MinOffsetX	31 - 0
0x10070	ImageSize_IncOffsetX	31 - 0

Copyright © Magics Technologies NV

MAG-CXP00002-NP- CoaXPress Serializer ASIC

0x10074	ImageSize_MinWidth	31 - 0
0x10078	ImageSize_IncWidth	31 - 0
0x1007c	ImageSize_TotalSizeX	31 - 0
0x10080	ImageSize_MinOffsetY	31 - 0
0x10084	ImageSize_IncOffsetY	31 - 0
0x10088	ImageSize_MinHeight	31 - 0
0x1008c	ImageSize_IncHeight	31 - 0
0x10090	ImageSize_TotalSizeY	31 - 0
0x10094	ImageSize_OffsetX	15 - 0
0x10098	ImageSize_Width	15 - 0
0x1009c	ImageSize_OffsetY	15 - 0
0x100a0	ImageSize_Height	15 - 0
0x100c0	PixelCoding_NoSpecifyInq	0
0x100c0	PixelCoding_ManualInq	1
0x100c0	PixelCoding_AutoInq	2
0x100c0	PixelCoding_AutoOnceInq	3
0x100c0	PixelCoding_DefaultInq	4
0x100c0	PixelCoding_ValueType	23 - 16
0x100c0	PixelCoding_Readable	24
0x100c0	PixelCoding_Writable	25
0x100c0	PixelCoding_UserSetLoadable	26
0x100c0	PixelCoding_Active	30
0x100c0	PixelCoding_Implemented	31
0x100c4	PixelCoding_OffsetForExpanded	31 - 0
0x100c8	PixelCoding_Control	3 - 0
0x100cc	PixelCoding_BayerGR	1
0x100cc	PixelCoding_BayerGRPacked	3
0x100cc	PixelCoding_BayerRG	4
0x100cc	PixelCoding_BayerRGPacked	6
0x100cc	PixelCoding_BayerGB	7
0x100cc	PixelCoding_BayerGBPacked	9
0x100cc	PixelCoding_BayerBG	10
0x100cc	PixelCoding_BayerBGPacked	12
0x100d0	PixelCoding_YUV411Packed	4
0x100d0	PixelCoding_YUV422Packed	12
0x100d0	PixelCoding_YUV444Packed	20
0x100d4	PixelCoding_RGBPacked	2
0x100d4	PixelCoding_BGRPacked	10
0x100d8	PixelCoding_Mono	0
0x100d8	PixelCoding_MonoSigned	1
0x100d8	PixelCoding_MonoPacked	2
0x100dc	PixelCoding_Value	31 - 0
0x100e0	PixelSize_NoSpecifyInq	0
0x100e0	PixelSize_ManualInq	1
0x100e0	PixelSize_AutoInq	2
0x100e0	PixelSize_AutoOnceInq	3
0x100e0	PixelSize_DefaultInq	4
0x100e0	PixelSize_ValueType	23 - 16
0x100e0	PixelSize_Readable	24
0x100e0	PixelSize_Writable	25
0x100e0	PixelSize_UserSetLoadable	26
0x100e0	PixelSize_Active	30
0x100e0	PixelSize_Implemented	31
0x100e4	PixelSize_OffsetForExpanded	31 - 0
0x100e8	PixelSize_Control	3 - 0
0x100f4	PixelSize_Bpp48	16
0x100f8	PixelSize_Bpp8	8
0x100f8	PixelSize_Bpp10	10
0x100f8	PixelSize_Bpp12	12
0x100f8	PixelSize_Bpp14	14
0x100f8	PixelSize_Bpp16	16
0x100f8	PixelSize_Bpp24	24
0x100fc	PixelSize_Value	3 - 0
0x10100	PixelEndian_Implemented	31

Copyright © Magics Technologies NV

MAG-CXP00002-NP- CoaXPress Serializer ASIC

0x10120	BinningHorizontal_Implemented	31
0x10140	BinningVertical_Implemented	31
0x10160	DecimationHorizontal_NoSpecifyInq	0
0x10160	DecimationHorizontal_ManualInq	1
0x10160	DecimationHorizontal_AutoInq	2
0x10160	DecimationHorizontal_AutoOnceInq	3
0x10160	DecimationHorizontal_DefaultInq	4
0x10160	DecimationHorizontal_ValueType	23 - 16
0x10160	DecimationHorizontal_Readable	24
0x10160	DecimationHorizontal_Writable	25
0x10160	DecimationHorizontal_UserSetLoadable	26
0x10160	DecimationHorizontal_Active	30
0x10160	DecimationHorizontal_Implemented	31
0x10164	DecimationHorizontal_OffsetForExpanded	31 - 0
0x10168	DecimationHorizontal_Control	3 - 0
0x1016c	DecimationHorizontal_Mult	31 - 0
0x10170	DecimationHorizontal_Div	31 - 0
0x10174	DecimationHorizontal_Min	31 - 0
0x10178	DecimationHorizontal_Max	31 - 0
0x1017c	DecimationHorizontal_Value	1 - 0
0x10180	DecimationVertical_NoSpecifyInq	0
0x10180	DecimationVertical_ManualInq	1
0x10180	DecimationVertical_AutoInq	2
0x10180	DecimationVertical_AutoOnceInq	3
0x10180	DecimationVertical_DefaultInq	4
0x10180	DecimationVertical_ValueType	23 - 16
0x10180	DecimationVertical_Readable	24
0x10180	DecimationVertical_Writable	25
0x10180	DecimationVertical_UserSetLoadable	26
0x10180	DecimationVertical_Active	30
0x10180	DecimationVertical_Implemented	31
0x10184	DecimationVertical_OffsetForExpanded	31 - 0
0x10188	DecimationVertical_Control	3 - 0
0x1018c	DecimationVertical_Mult	31 - 0
0x10190	DecimationVertical_Div	31 - 0
0x10194	DecimationVertical_Min	31 - 0
0x10198	DecimationVertical_Max	31 - 0
0x1019c	DecimationVertical_Value	1 - 0
0x101a0	ReverseX_NoSpecifyInq	0
0x101a0	ReverseX_ManualInq	1
0x101a0	ReverseX_AutoInq	2
0x101a0	ReverseX_AutoOnceInq	3
0x101a0	ReverseX_DefaultInq	4
0x101a0	ReverseX_ValueType	23 - 16
0x101a0	ReverseX_Readable	24
0x101a0	ReverseX_Writable	25
0x101a0	ReverseX_UserSetLoadable	26
0x101a0	ReverseX_Active	30
0x101a0	ReverseX_Implemented	31
0x101a4	ReverseX_OffsetForExpanded	31 - 0
0x101a8	ReverseX_Control	3 - 0
0x101ac	ReverseX_BitWritable	0
0x101b0	ReverseX_Value	0
0x101c0	ReverseY_NoSpecifyInq	0
0x101c0	ReverseY_ManualInq	1
0x101c0	ReverseY_AutoInq	2
0x101c0	ReverseY_AutoOnceInq	3
0x101c0	ReverseY_DefaultInq	4
0x101c0	ReverseY_ValueType	23 - 16
0x101c0	ReverseY_Readable	24
0x101c0	ReverseY_Writable	25
0x101c0	ReverseY_UserSetLoadable	26
0x101c0	ReverseY_Active	30
0x101c0	ReverseY_Implemented	31

Copyright © Magics Technologies NV

MAG-CXP00002-NP- CoaXPress Serializer ASIC

0x101c4	ReverseY_OffsetForExpanded	31 - 0
0x101c8	ReverseY_Control	3 - 0
0x101cc	ReverseY_BitWritable	0
0x101d0	ReverseY_Value	0
0x101e0	TestPattern_NoSpecifyInq	0
0x101e0	TestPattern_ManualInq	1
0x101e0	TestPattern_AutoInq	2
0x101e0	TestPattern_AutoOnceInq	3
0x101e0	TestPattern_DefaultInq	4
0x101e0	TestPattern_ValueType	23 - 16
0x101e0	TestPattern_Readable	24
0x101e0	TestPattern_Writable	25
0x101e0	TestPattern_UserSetLoadable	26
0x101e0	TestPattern_Active	30
0x101e0	TestPattern_Implemented	31
0x101e4	TestPattern_OffsetForExpanded	31 - 0
0x101e8	TestPattern_Control	3 - 0
0x101ec	TestPattern_VendorSpecific0	24
0x101ec	TestPattern_VendorSpecific1	25
0x101ec	TestPattern_VendorSpecific2	26
0x101ec	TestPattern_VendorSpecific3	27
0x101ec	TestPattern_VendorSpecific4	28
0x101ec	TestPattern_VendorSpecific5	29
0x101ec	TestPattern_VendorSpecific6	30
0x101ec	TestPattern_VendorSpecific7	31
0x101f4	TestPattern_GreyHorizontalRampMoving	0
0x101f4	TestPattern_GreyVerticalRampMoving	1
0x101f4	TestPattern_HorizontalMoving	8
0x101f4	TestPattern_VerticalLineMoving	9
0x101f4	TestPattern_ColorBar	16
0x101f4	TestPattern_GreyScaleChart	17
0x101f8	TestPattern_Off	0
0x101f8	TestPattern_Black	1
0x101f8	TestPattern_White	2
0x101f8	TestPattern_Grey55	3
0x101f8	TestPattern_GreyAA	4
0x101f8	TestPattern_GreyHorizontalRamp	16
0x101f8	TestPattern_GreyVerticalRamp	17
0x101f8	TestPattern_StraightCounter	24
0x101fc	TestPattern_Value	31 - 0

Copyright © Magics Technologies NV

11.2 Detailed register map: configuration registers

11.2.1 Register (Address 0x4) type: Input

#	Setting		Register 32bit
0	XML_Settings_Revision		31 - 0
#	Default Value	Logic	Info
0	Input: Read-Only		The version of the CoaXPress standard implemented by this Device

11.2.2 Register (Address 0x3000) type: Input

#	Setting		Register 32bit
0	SettingAddress_WidthAddress		31 - 0
#	Default Value	Logic	Info
0	Input: Read-Only		This register shall provide the address in the manufacturer-specific register space of Width

11.2.3 Register (Address 0x3004) type: Input

#	Setting		Register 32bit
0	SettingAddress_HeightAddress		31 - 0
#	Default Value	Logic	Info
0	Input: Read-Only		This register shall provide the address in the manufacturer-specific register space of Height

11.2.4 Register (Address 0x4000) type: Trigger

#	Setting		Register 32bit
0	StreamSettings_ConnectionReset		31 - 0
#	Default Value	Logic	Info
0	0b00000000000000000000000000000000		Writing the value 0x00000001 to this register shall provide Device connection reset. The Device shall also execute a connection reset after power-up.

11.2.5 Register (Address 0x4008) type: State

#	Setting		Register 32bit
0	StreamSettings_MasterHostConnectionID		31 - 0
#	Default Value	Logic	Info
0	0b00000000000000000000000000000000		This register shall hold the Host Connection ID of the Host connection connected to the Device Master connection. The value 0x00000000 is reserved to indicate an unknown Host ID. This register is set by the Host to (Host) unique 32 bit ID number as part of the Device discovery process. A connection reset sets the value 0x00000000.

Copyright © Magics Technologies NV / Confidential information

11.2.6 Register (Address 0x4010) type: State

#	Setting		Register 32bit
0	StreamSettings_StreamPacketSizeMax		31 - 0
#	Default Value	Logic	Info
0	0b00000000000000000000000000000000		This register shall hold the maximum stream packet size the Host can accept. The size is defined in bytes, and shall be a multiple of 4 bytes. The Device can use any packet size it wants to up to this size. The defined size is that of the entire packet, not just the payload. Comment: This register is set by the Host as part of the Device discovery process.

11.2.7 Register (Address 0x4014) type: State

#	Setting		Register 32bit
0	StreamSettings_ConnectionConfig		31 - 0
#	Default Value	Logic	Info
0	0b00000000000000010000000000101000		Not all theoretical combinations of connection speed and number of connections may be usable. One register is used to ensure that the two variables are set simultaneously. The XML file and product documentation give valid combinations for the Device. A connection that is not activated shall not send IDLE words.

11.2.8 Register (Address 0x401c) type: State

#	Setting		Register 32bit	
0	StreamSettings_TestMode			0
#	Default Value	Logic	Info	
0	0b0		Writing the value 0x00000001 to this register shall enable test packets transmission from Device to Host. The value 0x00000000 shall allow normal operation. When the value is changed from 0x00000001 to 0x00000000 the Device shall complete the packet of 1024 test words currently being transmitted	

11.2.9 Register (Address 0x4020) type: State

#	Setting		Register 32bit
0	StreamSettings_TestErrorCountSelector		31 - 0
#	Default Value	Logic	Info
0	0b00000000000000000000000000000000		This register shall select the required test count [TestErrorCountSelector] register. It shall hold a valid Device Connection ID 0 .. n-1, or n for the optional high speed upconnection.

11.2.10 Register (Address 0x4024) type: State

#	Setting		Register 32bit
0	StreamSettings_TestErrorCount		31 - 0
#	Default Value	Logic	Info

Copyright © Magics Technologies NV / Confidential information

0	0b00000000000000000000000000000000		This register shall provide the current connection error count for the connection referred to by register TestErrorCountSelector. Writing 0x00000000 to this register shall reset to zero the connection error count for the connection referred to by register TestErrorCountSelector

11.2.11 Register (Address 0x4028) type: State

#	Setting		Register 32bit
0	StreamSettings_TestPacketCountTxLsb		31 - 0
#	**Default Value**	**Logic**	**Info**
0	0b00000000000000000000000000000000		This register shall provide the current transmitted connection test packet count for the connection referred to by register TestErrorCountSelector. Writing 0x00000000 to this register shall reset to zero the transmitted connection packet count for the connection referred to by register TestErrorCountSelector

11.2.12 Register (Address 0x402c) type: State

#	Setting		Register 32bit
0	StreamSettings_TestPacketCountTxMsb		31 - 0
#	**Default Value**	**Logic**	**Info**
0	0b00000000000000000000000000000000		This register shall provide the current transmitted connection test packet count for the connection referred to by register TestErrorCountSelector. Writing 0x00000000 to this register shall reset to zero the transmitted connection packet count for the connection referred to by register TestErrorCountSelector

11.2.13 Register (Address 0x4030) type: State

#	Setting		Register 32bit
0	StreamSettings_TestPacketCountRxLsb		31 - 0
#	**Default Value**	**Logic**	**Info**
0	0b00000000000000000000000000000000		This register shall provide the current received connection test packet count for the connection referred to by register TestErrorCountSelector. Writing 0x00000000 to this register shall reset to zero the received connection packet count for the connection referred to by register TestErrorCountSelector

11.2.14 Register (Address 0x4034) type: State

#	Setting		Register 32bit
0	StreamSettings_TestPacketCountRxMsb		31 - 0
#	**Default Value**	**Logic**	**Info**
0	0b00000000000000000000000000000000		This register shall provide the current received connection test packet count for the connection referred to by register TestErrorCountSelector.

Copyright © Magics Technologies NV / Confidential information

			Writing 0x00000000 to this register shall reset to zero the received connection packet count for the connection referred to by register TestErrorCountSelector

11.2.15 Register (Address 0x4044) type: Input

#	Setting		Register 32bit
0	StreamSettings_VersionsSupported		31 - 0
#	Default Value	Logic	Info
0	Input: Read-Only		This register shall provide the version(s) of the CoaXPress standard supported by the Device

11.2.16 Register (Address 0x4048) type: State

#	Setting		Register 32bit
0	StreamSettings_VersionUsed		31 - 0
#	Default Value	Logic	Info
0	0b00000000000000001000000000000001		This register shall provide the version of the CoaXPress standard used to communicate between the Device and Host. The register is set during Discovery

11.2.17 Register (Address 0x6000) type: Configuration

#	Setting		Register 32bit	
0	AcquisitionSettings_AcquisitionMode			3 - 0
#	Default Value	Logic	Info	
0	0b0000			

11.2.18 Register (Address 0x6004) type: Trigger

#	Setting		Register 32bit	
0	AcquisitionSettings_AcquisitionStart			0
#	Default Value	Logic	Info	
0	0b0			

11.2.19 Register (Address 0x6008) type: Trigger

#	Setting		Register 32bit	
0	AcquisitionSettings_AcquisitionStop			0
#	Default Value	Logic	Info	
0	0b0			

11.2.20 Register (Address 0x600c) type: State

#	Setting	Register 32bit

Copyright © Magics Technologies NV / Confidential information

0	AcquisitionSettings_PixelFormat		31 - 0
#	Default Value	Logic	Info
0	0b00000001000100000000000000000011		Default is HD 10b mono (GenICamformat, and not CXP format)

11.2.21 Register (Address 0x6018) type: Input

#	Setting		Register 32bit
0	AcquisitionSettings_HeartBeatTime		31 - 0
#	Default Value	Logic	Info
0	Input: Read-Only		

11.2.22 Register (Address 0x601c) type: Input

#	Setting		Register 32bit
0	AcquisitionSettings_HeartBeatTime		31 - 0
#	Default Value	Logic	Info
0	Input: Read-Only		

11.2.23 Register (Address 0x6050) type: Configuration

#	Setting		Register 32bit
0	IIDC2EntryImager_DeviceControl		31 - 0
#	Default Value	Logic	Info
0	0b00000000000000000000000000000000	Active_High	CategoryBlockN (N=0-31) starts at IIDC2Entry address + OffsetForCategoryBlockN value

11.2.24 Register (Address 0x6054) type: Configuration

#	Setting		Register 32bit
0	IIDC2EntryImager_TransportLayerControl		31 - 0
#	Default Value	Logic	Info
0	0b00000000000000000000000000000000	Active_High	CategoryBlockN (N=0-31) starts at IIDC2Entry address + OffsetForCategoryBlockN value

11.2.25 Register (Address 0x6058) type: Configuration

#	Setting		Register 32bit
0	IIDC2EntryImager_ImageFormatControl		31 - 0
#	Default Value	Logic	Info
0	0b00000000000000001001111111010000	Active_High	CategoryBlockN (N=0-31) starts at IIDC2Entry address + OffsetForCategoryBlockN value

11.2.26 Register (Address 0x605c) type: Configuration

#	Setting	Register 32bit

Copyright © Magics Technologies NV / Confidential information

0	IIDC2EntryImager_AcquisitionControl		31 - 0
#	Default Value	Logic	Info
0	0b00000000000000000100111111010000	Active_High	CategoryBlockN (N=0-31) starts at IIDC2Entry address + OffsetForCategoryBlockN value

11.2.27 Register (Address 0x6060) type: Configuration

#	Setting		Register 32bit
0	IIDC2EntryImager_LuminanceControl		31 - 0
#	Default Value	Logic	Info
0	0b00000000000000000000000000000000	Active_High	CategoryBlockN (N=0-31) starts at IIDC2Entry address + OffsetForCategoryBlockN value

11.2.28 Register (Address 0x6064) type: Configuration

#	Setting		Register 32bit
0	IIDC2EntryImager_ChromaControl		31 - 0
#	Default Value	Logic	Info
0	0b00000000000000000000000000000000	Active_High	CategoryBlockN (N=0-31) starts at IIDC2Entry address + OffsetForCategoryBlockN value

11.2.29 Register (Address 0x6068) type: Configuration

#	Setting		Register 32bit
0	IIDC2EntryImager_LUTControl		31 - 0
#	Default Value	Logic	Info
0	0b00000000000000000000000000000000	Active_High	CategoryBlockN (N=0-31) starts at IIDC2Entry address + OffsetForCategoryBlockN value

11.2.30 Register (Address 0x606c) type: Configuration

#	Setting		Register 32bit
0	IIDC2EntryImager_TriggerControl		31 - 0
#	Default Value	Logic	Info
0	0b00000000000000001001011111010000	Active_High	CategoryBlockN (N=0-31) starts at IIDC2Entry address + OffsetForCategoryBlockN value

11.2.31 Register (Address 0x6070) type: Configuration

#	Setting		Register 32bit
0	IIDC2EntryImager_UserSetControl		31 - 0
#	Default Value	Logic	Info
0	0b00000000000000000000000000000000	Active_High	CategoryBlockN (N=0-31) starts at IIDC2Entry address + OffsetForCategoryBlockN value

11.2.32 Register (Address 0x6074) type: Configuration

#	Setting	Register 32bit

Copyright © Magics Technologies NV / Confidential information

0	IIDC2EntryImager_DigitalIOControl		31 - 0
#	Default Value	Logic	Info
0	0b00000000000000000111111111010000	Active_High	CategoryBlockN (N=0-31) starts at IIDC2Entry address + OffsetForCategoryBlockN value

11.2.33 Register (Address 0x6078) type: Configuration

#	Setting		Register 32bit
0	IIDC2EntryImager_CounterAndTimerControl		31 - 0
#	Default Value	Logic	Info
0	0b00000000000000000000000000000000	Active_High	CategoryBlockN (N=0-31) starts at IIDC2Entry address + OffsetForCategoryBlockN value

11.2.34 Register (Address 0x607c) type: Configuration

#	Setting		Register 32bit
0	IIDC2EntryImager_EventControl		31 - 0
#	Default Value	Logic	Info
0	0b00000000000000000000000000000000	Active_High	CategoryBlockN (N=0-31) starts at IIDC2Entry address + OffsetForCategoryBlockN value

11.2.35 Register (Address 0x6080) type: Configuration

#	Setting		Register 32bit
0	IIDC2EntryImager_ChunkControl		31 - 0
#	Default Value	Logic	Info
0	0b00000000000000000000000000000000	Active_High	CategoryBlockN (N=0-31) starts at IIDC2Entry address + OffsetForCategoryBlockN value

11.2.36 Register (Address 0x6084) type: Configuration

#	Setting		Register 32bit
0	IIDC2EntryImager_LightControl		31 - 0
#	Default Value	Logic	Info
0	0b00000000000000000000000000000000	Active_High	CategoryBlockN (N=0-31) starts at IIDC2Entry address + OffsetForCategoryBlockN value

11.2.37 Register (Address 0x60b0) type: Configuration

#	Setting		Register 32bit
0	IIDC2EntryImager_VendorUniqueControl1		31 - 0
#	Default Value	Logic	Info
0	0b00000000000000000000000000000000	Active_High	CategoryBlockN (N=0-31) starts at IIDC2Entry address + OffsetForCategoryBlockN value

11.2.38 Register (Address 0x60b4) type: Configuration

#	Setting	Register 32bit

Copyright © Magics Technologies NV / Confidential information

0	IIDC2EntryImager_VendorUniqueControl2		31 - 0
#	Default Value	Logic	Info
0	0b00000000000000000000000000000000	Active_High	CategoryBlockN (N=0-31) starts at IIDC2Entry address + OffsetForCategoryBlockN value

11.2.39 Register (Address 0x60b8) type: Configuration

#	Setting		Register 32bit
0	IIDC2EntryImager_VendorUniqueControl3		31 - 0
#	Default Value	Logic	Info
0	0b00000000000000000000000000000000	Active_High	CategoryBlockN (N=0-31) starts at IIDC2Entry address + OffsetForCategoryBlockN value

11.2.40 Register (Address 0x60bc) type: Configuration

#	Setting		Register 32bit
0	IIDC2EntryImager_VendorUniqueControl4		31 - 0
#	Default Value	Logic	Info
0	0b00000000000000000000000000000000	Active_High	CategoryBlockN (N=0-31) starts at IIDC2Entry address + OffsetForCategoryBlockN value

11.2.41 Register (Address 0x60c0) type: Configuration

#	Setting		Register 32bit
0	IIDC2EntryImager_VendorUniqueControl5		31 - 0
#	Default Value	Logic	Info
0	0b00000000000000000000000000000000	Active_High	CategoryBlockN (N=0-31) starts at IIDC2Entry address + OffsetForCategoryBlockN value

11.2.42 Register (Address 0x60c4) type: Configuration

#	Setting		Register 32bit
0	IIDC2EntryImager_VendorUniqueControl6		31 - 0
#	Default Value	Logic	Info
0	0b00000000000000000111001111010000	Active_High	CategoryBlockN (N=0-31) starts at IIDC2Entry address + OffsetForCategoryBlockN value

11.2.43 Register (Address 0x60c8) type: Configuration

#	Setting		Register 32bit
0	IIDC2EntryImager_VendorUniqueControl7		31 - 0
#	Default Value	Logic	Info
0	0b00000000000000000110001111010000	Active_High	CategoryBlockN (N=0-31) starts at IIDC2Entry address + OffsetForCategoryBlockN value

11.2.44 Register (Address 0x60cc) type: Configuration

#	Setting	Register 32bit

Copyright © Magics Technologies NV / Confidential information

0	IIDC2EntryImager_VendorUniqueControl8		31 - 0
#	Default Value	Logic	Info
0	0b00000000000000000000000010100000	Active_High	CategoryBlockN (N=0-31) starts at IIDC2Entry address + OffsetForCategoryBlockN value

11.2.45 Register (Address 0x6100) type: Input

#	Setting		Register 32bit	
0	Analog_chip_id			7 - 0
#	Default Value	Logic	Info	
0	Input: Read-Only		Contains the chip ID 0x62	

11.2.46 Register (Address 0x6104) type: Input

#	Setting		Register 32bit	
0	Analog_version_reg			7 - 0
#	Default Value	Logic	Info	
0	Input: Read-Only		- [3:0](version_metal) : Reports the metal version 0x0: First metal version (No metal fix) 0x1: First metal fix version. -[7:4] (version_full) : Reports the chip version.	

11.2.47 Register (Address 0x6108) type: Input

#	Setting		Register 32bit	
0	Analog_date_0			7 - 0
#	Default Value	Logic	Info	
0	Input: Read-Only		Reports the tapeOut Date as 0b0010,10100,0010100	

11.2.48 Register (Address 0x610c) type: Input

#	Setting		Register 32bit	
0	Analog_date_1			7 - 0
#	Default Value	Logic	Info	
0	Input: Read-Only		Reports the tapeOut Date as 0b0010,10100,0010100	

11.2.49 Register (Address 0x62a8) type: Configuration_otp

#	Setting		Register 32bit	
0	Analog_ctrl_video_in_sampling			3 - 0
#	Default Value	Logic	Info	

Copyright © Magics Technologies NV / Confidential information

0	0b0000	active high	video in control samplig sensitivity 0 : 0 data in sampling on posedge ; 1: data in sampling on negedge 1: 0 lvalid sampling on posedge ; 1: lvalid sampling on negedge 2: 0 dvalid sampling on posedge ; 1: dvalid sampling on negedge 3: 0 fval

11.2.50 Register (Address 0x62d0) type: Configuration_otp

#	Setting		Register 32bit	
0	Analog_mode_select			1 - 0
#	Default Value	Logic	Info	
0	0b00	active high	selection of the resolution mode. 0: resolution from registers. 1:VGA resolution 2:HD resolution 3: FHD resolution	

11.2.51 Register (Address 0x62d4) type: Configuration

#	Setting		Register 32bit		
0	Analog_black_rows_en			2	
#	Default Value	Logic	Info		
0	0b0	active high	enable for use if black pixels in case it is enabled 64 is added to the image header in height config		

11.2.52 Register (Address 0xb03c) type: Configuration

#	Setting		Register 32bit	
0	AcquisitionCommand_Value			3 - 0
#	Default Value	Logic	Info	
0	0b0001		What will be the default at start up? According to CXP there should be no images transmited at start up 1: Stop 8: Continuous 9: MultiFrame	

11.2.53 Register (Address 0xb05c) type: Configuration

#	Setting		Register 32bit	
0	AcquisitionFrameCount_Value			15 - 0
#	Default Value	Logic	Info	
0	0b0000000000000001		Default number of frames in MultiFrame (burst) mode	

Copyright © Magics Technologies NV / Confidential information

11.2.54 Register (Address 0xb0bc) type: Configuration

#	Setting		Register 32bit	
0	AcquisitionFrameRate_Value			8 - 0
#	Default Value	Logic	Info	
0	0b000000101		Default frame rate at start up? Depending on the default resolution?	

11.2.55 Register (Address 0xc430) type: Configuration

#	Setting		Register 32bit
0	VendorUniqueBootstrapFSM_iidc_entry_offset_local		31 - 0
#	Default Value	Logic	Info
0	0b00000000000000000110000000110000		Local address where the iidc entry can be found

11.2.56 Register (Address 0xc440) type: Configuration

#	Setting		Register 32bit	
0	VendorUniqueBootstrapFSM_spi_master_clock_divider			15 - 0
#	Default Value	Logic	Info	
0	0b0000000000000010		Clock divider for the spi master connected to the imager F_spi=125MHz/(2*(spi_master_clock_divider+1)) Default: 2 --> 20.83MHz	

11.2.57 Register (Address 0xd430) type: -

#	Setting		Register 32bit		
0	VendorUniqueSPIGPIO_trigger				0
1	VendorUniqueSPIGPIO_busy			1	
#	Default Value	Logic	Info		
0	0b0		Trigger for the spi transaction, write 1 to start a transaction, field automatically resets to 0		
1	Input: Read-Only		Status of the spi transaction, 1: transaction busy, 0 transaction complete		

11.2.58 Register (Address 0xd434) type: Configuration

#	Setting		Register 32bit	
0	VendorUniqueSPIGPIO_divider			15 - 0
#	Default Value	Logic	Info	
0	0b0000000000000010		Clock divider for the spi clock. f_spi = 125MHz/2*(divider+1)	

11.2.59 Register (Address 0xd438) type: Configuration

#	Setting	Register 32bit

Copyright © Magics Technologies NV / Confidential information

0	VendorUniqueSPIGPIO_transaction_size			5 - 0
#	Default Value	Logic	Info	
0	0b111111		Amount of bits -1 for the spi transaction	

11.2.60 Register (Address 0xd43c) type: Configuration

#	Setting		Register 32bit	
0	VendorUniqueSPIGPIO_ssel			3 - 0
#	Default Value	Logic	Info	
0	0b0000		Slave select to be used in the spi transaction, coded in decimal	

11.2.61 Register (Address 0xd440) type: Configuration

#	Setting		Register 32bit
0	VendorUniqueSPIGPIO_data_mosi		31 - 0
#	Default Value	Logic	Info
0	0b00000000000000000000000000000000		Data to be send to the spi slave through mosi, bits [63:32]

11.2.62 Register (Address 0xd448) type: Configuration

#	Setting		Register 32bit
0	VendorUniqueSPIGPIO_data_mosi		31 - 0
#	Default Value	Logic	Info
0	0b00000000000000000000000000000000		Data to be send to the spi slave through mosi, bits [31:0]

11.2.63 Register (Address 0xd44c) type: Input

#	Setting		Register 32bit
0	VendorUniqueSPIGPIO_data_miso		31 - 0
#	Default Value	Logic	Info
0	Input: Read-Only		Data to be received from the spi slave through miso, bits [63:32]

11.2.64 Register (Address 0xd450) type: Input

#	Setting		Register 32bit
0	VendorUniqueSPIGPIO_data_miso		31 - 0
#	Default Value	Logic	Info
0	Input: Read-Only		Data to be received from the spi slave through miso, bits [31:0]

11.2.65 Register (Address 0xd454) type: Configuration

#	Setting	Register 32bit

Copyright © Magics Technologies NV / Confidential information

0	VendorUniqueSPIGPIO_spi_enable			0
#	Default Value	Logic	Info	
0	0b0		enable for the SPI Master through GPIOs	

11.2.66 Register (Address 0xe030) type: Configuration

#	Setting		Register 32bit	
0	IOLineModeAll_Value			10 - 0
#	Default Value	Logic	Info	
0	0b00000000000		Handles direction of I/O lines. 0 : Input 1 : Output	

11.2.67 Register (Address 0xe050) type: Configuration

#	Setting		Register 32bit	
0	IOLineInverterAll_Value			10 - 0
#	Default Value	Logic	Info	
0	0b00000000000		Handles the inversion of I/O lines. 0 : Not inverted 1 : Inverted	

11.2.68 Register (Address 0xe070) type: Input

#	Setting		Register 32bit	
0	IOLineStatusAll_Value			10 - 0
#	Default Value	Logic	Info	
0	Input: Read-Only		Indicates the current status of all I/O lines. 0 :Low 1 : High	

11.2.69 Register (Address 0xe090) type: Configuration

#	Setting		Register 32bit	
0	IOUserOutputValueAll_Value			10 - 0
#	Default Value	Logic	Info	
0	0b00000000000		Sets the internal register of all user outputs. 0 : Low 1 : High	

Copyright © Magics Technologies NV / Confidential information

11.2.70 Register (Address 0xe0bc) type: Configuration

#	Setting		Register 32bit	
0	IOLineSelector_Value			6 - 0
#	Default Value	Logic	Info	
0	0b0000000		Selects the I/O line to handle. It is reflected to IOLineSource.	

11.2.71 Register (Address 0xe0dc) type: State

#	Setting		Register 32bit	
0	IOLineSource_Value			6 - 0
#	Default Value	Logic	Info	
0	0b0000000		Selects which source signals to connect I/O line. The number of I/O line is selected by IOLineSelector. Off : Output is disabled. UserOutput : Current user output value which is handled by UserOutputValueAll (bit position is same as IOLine number). Timer0Active, Timer1Active1,...:Current TimerValue which is handled by FeatureCSRs in CounterAndTimerControl AcquisitionActive : Device is processing Continuous, MultiFrame, ImageBufferRead or Retransmit command of AcquisitionCommand. FrameTriggerWait : Device is currently waiting a frame trigger.. FrameActive: Device is currently capturing a image. FrameTransferActive : Device is transmitting the image data. ExposureActive : Device is exposing	

11.2.72 Register (Address 0xf83c) type: Configuration

#	Setting		Register 32bit	
0	TriggerMode_Value			0
#	Default Value	Logic	Info	
0	0b0	Active_High	Default "0": off, "1" trigger enabled	

11.2.73 Register (Address 0xf87c) type: Configuration

#	Setting		Register 32bit	
0	TriggerSource_Value			6 - 0
#	Default Value	Logic	Info	
0	0b1111000	Active_High	64: Software trigger 120: External pin as trigger	

Copyright © Magics Technologies NV / Confidential information

11.2.74 Register (Address 0xf8dc) type: Trigger_registered

#	Setting		Register 32bit
0	SoftwareTrigger_Value		0
#	Default Value	Logic	Info
0	0b0	Active_High	0: Software trigger inactive 1: Software trigger active

11.2.75 Register (Address 0x10098) type: Configuration

#	Setting		Register 32bit
0	ImageSize_Width		15 - 0
#	Default Value	Logic	Info
0	0b0000010100000000	Active_High	

11.2.76 Register (Address 0x100a0) type: Configuration

#	Setting		Register 32bit
0	ImageSize_Height		15 - 0
#	Default Value	Logic	Info
0	0b0000001011010000	Active_High	

11.2.77 Register (Address 0x100dc) type: State

#	Setting		Register 32bit
0	PixelCoding_Value		31 - 0
#	Default Value	Logic	Info
0	0b00000000000000000000000000000000	Active_High	Depeding on "ReverseX_Value", "ReverseY_Value", "col_mono pad", these can change the color pattern

11.2.78 Register (Address 0x100fc) type: State

#	Setting		Register 32bit
0	PixelSize_Value		3 - 0
#	Default Value	Logic	Info
0	0b1010	Active_High	8: represents that the imager is outputting 8-bit 10: represents that the imager is outputting 10-bit 12: represents that the imager is outputting 12-bit

11.2.79 Register (Address 0x1017c) type: Configuration

#	Setting		Register 32bit
0	DecimationHorizontal_Value		1 - 0

Copyright © Magics Technologies NV / Confidential information

#	Default Value	Logic	Info
0	0b00		Current sub sampling rate, default "0" --> Subsampling off

11.2.80 Register (Address 0x1019c) type: Configuration

#	Setting	Register 32bit
0	DecimationVertical_Value	1 - 0

#	Default Value	Logic	Info
0	0b00		Current sub sampling rate, default "0" --> Subsampling off

11.2.81 Register (Address 0x101b0) type: Configuration

#	Setting	Register 32bit
0	ReverseX_Value	0

#	Default Value	Logic	Info
0	0b0		0: No reverse in X direction (default) 1: Reverse in X direction

11.2.82 Register (Address 0x101d0) type: Configuration

#	Setting	Register 32bit
0	ReverseY_Value	0

#	Default Value	Logic	Info
0	0b0		0: No reverse in Y direction (default) 1: Reverse in Y direction

11.2.83 Register (Address 0x101f4) type: Input

#	Setting	Register 32bit
0	TestPattern_ColorBar	16

#	Default Value	Logic	Info
0	Input: Read-Only		The default of this register should 1 incase it is a color imager, incase of B/W this should be 0!

11.2.84 Register (Address 0x101fc) type: Configuration

#	Setting	Register 32bit
0	TestPattern_Value	31 - 0

#	Default Value	Logic	Info
0	0b00000000000000000000000000000000		0: Image from the pixel array (default) 1: Black test image 2: White test image

Copyright © Magics Technologies NV / Confidential information

			3: Grey55 test image 4: GreyAA test image 16: GrayHorizontalRamp 17: GrayVerticalRamp 48: ColorBar 49: GreyScaleChart 120: VendorSpecific0 test image 121: VendorSpecific1 test image 122: VendorSpecific2 test image 123: VendorSpecific3 test image 124: VendorSpecific4 test image 125: VendorSpecific5 test image

Copyright © Magics Technologies NV / Confidential information

11.3 Detailed register map: constant registers

0x0	XML_Settings_Standard	31 - 0	0b11000000101001111001101011100101		Magic number (constant) indicating the Device implements the CoaXPress standard
0x8	XML_Settings_XmlManifestSize	31 - 0	0b00000000000000000000000000000001		This register shall provide the number of XML manifests available. At least one manifest shall be available.
0xc	XML_Settings_XmlManifestSelector	31 - 0	0b00000000000000000000000000000000		This register shall select the required XML manifest registers. It shall hold a number between 0 and XmlManifestSize – 1.
0x10	XML_Settings_XmlVersion	31 - 0	0b00000000000000010000000000000100		This register shall provide the version number for the XML file given in the manifest referenced by register XmlManifestSelector.
0x14	XML_Settings_XmlSchemaVersion	31 - 0	0b00000000000000010000000000000001		This register shall provide the GenICam schema version for the XML file given in the manifest referenced by register XmlManifestSelector
0x18	XML_Settings_XmlUrlAddress	31 - 0	0b00000000000000001010000000000000		This register shall provide the address (manufacturer-specific range) of the start of the URL string referenced by register XmlManifestSelector.
0x1c	XML_Settings_IidcAddress	31 - 0	0b00000000000000000110000000110000		For Devices that support the IIDC2 protocol, this register shall provide the address of the start of the IIDC2 register space. For Devices that do not support IIDC2, this register shall be set to the value 0x00000000
0x2000	Device_DeviceVendorName	31 - 0	0b01001101011000010110011101101001		This register shall provide the name of the manufacturer of the Device as a string - Magics Technologies
0x2004	Device_DeviceVendorName	31 - 0	0b01100011011100110010000001010100		This register shall provide the name of the manufacturer of the Device as a string
0x2008	Device_DeviceVendorName	31 - 0	0b01100101011000110110100001101110		This register shall provide the name of the manufacturer of the Device as a string
0x200c	Device_DeviceVendorName	31 - 0	0b01101111011011000110111101100111		This register shall provide the name of the manufacturer of the Device as a string
0x2010	Device_DeviceVendorName	31 - 0	0b01101001011001010111001100000000		This register shall provide the name of the manufacturer of the Device as a string
0x2014	Device_DeviceVendorName	31 - 0	0b00000000000000000000000000000000		This register shall provide the name of the manufacturer of the Device as a string
0x2018	Device_DeviceVendorName	31 - 0	0b00000000000000000000000000000000		This register shall provide the name of the manufacturer of the Device as a string
0x201c	Device_DeviceVendorName	31 - 0	0b00000000000000000000000000000000		This register shall provide the name of the manufacturer of the Device as a string
0x2020	Device_DeviceModelName	31 - 0	0b01001101010000010100011100101101		This register shall provide the model name of the Device as a string. - To decide which text to add
0x2024	Device_DeviceModelName	31 - 0	0b01000011010110000101000000110000		This register shall provide the model name of the Device as a string.
0x2028	Device_DeviceModelName	31 - 0	0b00110000001100000011000000110010		This register shall provide the model name of the Device as a string.
0x202c	Device_DeviceModelName	31 - 0	0b00000000000000000000000000000000		This register shall provide the model name of the Device as a string.
0x2030	Device_DeviceModelName	31 - 0	0b00000000000000000000000000000000		This register shall provide the model name of the Device as a string.
0x2034	Device_DeviceModelName	31 - 0	0b00000000000000000000000000000000		This register shall provide the model name of the Device as a string.
0x2038	Device_DeviceModelName	31 - 0	0b00000000000000000000000000000000		This register shall provide the model name of the Device as a string.
0x203c	Device_DeviceModelName	31 - 0	0b00000000000000000000000000000000		This register shall provide the model name of the Device as a string.
0x2040	Device_DeviceManufacturerInfo	31 - 0	0b01001101011000010110011101101001		This register shall provide extended manufacturer-specific information about the Device as a string
0x2044	Device_DeviceManufacturerInfo	31 - 0	0b01100011011100110010000001010100		This register shall provide extended manufacturer-specific information about the Device as a string
0x2048	Device_DeviceManufacturerInfo	31 - 0	0b01100101011000110110100001101110		This register shall provide extended manufacturer-specific information about the Device as a string

Copyright © Magics Technologies NV / Confidential information

0x204c	Device_DeviceManufacturerInfo	31 - 0	0b01101111011011000110111101100111		This register shall provide extended manufacturer-specific information about the Device as a string
0x2050	Device_DeviceManufacturerInfo	31 - 0	0b01101001011001010111001100100000		This register shall provide extended manufacturer-specific information about the Device as a string
0x2054	Device_DeviceManufacturerInfo	31 - 0	0b01001101010000010100011100101101		This register shall provide extended manufacturer-specific information about the Device as a string
0x2058	Device_DeviceManufacturerInfo	31 - 0	0b01000011010110000101000000000000		This register shall provide extended manufacturer-specific information about the Device as a string
0x205c	Device_DeviceManufacturerInfo	31 - 0	0b00000000000000000000000000000000		This register shall provide extended manufacturer-specific information about the Device as a string
0x2060	Device_DeviceManufacturerInfo	31 - 0	0b00000000000000000000000000000000		This register shall provide extended manufacturer-specific information about the Device as a string
0x2064	Device_DeviceManufacturerInfo	31 - 0	0b00000000000000000000000000000000		This register shall provide extended manufacturer-specific information about the Device as a string
0x2068	Device_DeviceManufacturerInfo	31 - 0	0b00000000000000000000000000000000		This register shall provide extended manufacturer-specific information about the Device as a string
0x206c	Device_DeviceManufacturerInfo	31 - 0	0b00000000000000000000000000000000		This register shall provide extended manufacturer-specific information about the Device as a string
0x2070	Device_DeviceVersion	31 - 0	0b00110010001011100011000000000000		This register shall provide the version of the Device as a string.
0x2074	Device_DeviceVersion	31 - 0	0b00000000000000000000000000000000		This register shall provide the version of the Device as a string.
0x2078	Device_DeviceVersion	31 - 0	0b00000000000000000000000000000000		This register shall provide the version of the Device as a string.
0x207c	Device_DeviceVersion	31 - 0	0b00000000000000000000000000000000		This register shall provide the version of the Device as a string.
0x2080	Device_DeviceVersion	31 - 0	0b00000000000000000000000000000000		This register shall provide the version of the Device as a string.
0x2084	Device_DeviceVersion	31 - 0	0b00000000000000000000000000000000		This register shall provide the version of the Device as a string.
0x2088	Device_DeviceVersion	31 - 0	0b00000000000000000000000000000000		This register shall provide the version of the Device as a string.
0x208c	Device_DeviceVersion	31 - 0	0b00000000000000000000000000000000		This register shall provide the version of the Device as a string.
0x20b0	Device_DeviceSerialNumber	31 - 0	0b01001101010000010100011100101101		This register shall provide the serial number for the Device as a NULL-terminated string.
0x20b4	Device_DeviceSerialNumber	31 - 0	0b01000011010110000101000000110000		This register shall provide the serial number for the Device as a NULL-terminated string.
0x20b8	Device_DeviceSerialNumber	31 - 0	0b00110000001100000011000000110010		This register shall provide the serial number for the Device as a NULL-terminated string.
0x20bc	Device_DeviceSerialNumber	31 - 0	0b00000000000000000000000000000000		This register shall provide the serial number for the Device as a NULL-terminated string.
0x20c0	Device_DeviceUserId	31 - 0	0b00110001001000000010000000100000		This register shall provide a user-programmable identifier for the Device as a string. The Device shall provide persistent storage for this register so the value is maintained when power is switched off.
0x20c4	Device_DeviceUserId	31 - 0	0b00100000001000000010000000100000		This register shall provide a user-programmable identifier for the Device as a string. The Device shall provide persistent storage for this register so the value is maintained when power is switched off.

Copyright © Magics Technologies NV / Confidential information

MAG-CXP00002-NP- CoaXPress Serializer ASIC

0x20c8	Device_DeviceUserId	31 - 0	0b00100000001000000010000000100000		This register shall provide a user-programmable identifier for the Device as a string. The Device shall provide persistent storage for this register so the value is maintained when power is switched off.
0x20cc	Device_DeviceUserId	31 - 0	0b00000000000000000000000000000000		This register shall provide a user-programmable identifier for the Device as a string. The Device shall provide persistent storage for this register so the value is maintained when power is switched off.
0x20d0	Device_GenDcPrefetchDescriptorAddress	31 - 0	0b00000000000000000000000000000000		This register shall only be supported if GenDC is supported, as indicated by CapabilityRegister bit GenDcSupported --> Remove
0x20d4	Device_GenDcPrefetchDescriptorSize	31 - 0	0b00000000000000000000000000000000		This register shall only be supported if GenDC is supported, as indicated by CapabilityRegister bit GenDcSupported --> Remove
0x20d8	Device_GenDcFlowTableAddress	31 - 0	0b00000000000000000000000000000000		This register shall only be supported if GenDC is supported, as indicated by CapabilityRegister bit GenDcSupported --> Remove
0x20dc	Device_GenDcFlowTableSize	31 - 0	0b00000000000000000000000000000000		This register shall only be supported if GenDC is supported, as indicated by CapabilityRegister bit GenDcSupported --> Remove
0x20e0	Device_GenDcContainerSize	31 - 0	0b00000000000000000000000000000000		This register shall only be supported if GenDC is supported, as indicated by CapabilityRegister bit GenDcSupported --> Remove
0x3008	SettingAddress_AcquisitionModeAddress	31 - 0	0b00000000000000000110000000000000		This register shall provide the address in the manufacturer-specific register space of AcquisitionMode
0x300c	SettingAddress_AcquistionStartAddress	31 - 0	0b00000000000000000110000000000100		This register shall provide the address in the manufacturer-specific register space of AcquisitionStart
0x3010	SettingAddress_AcquistionStopAddress	31 - 0	0b00000000000000000110000000001000		This register shall provide the address in the manufacturer-specific register space of AcquisitionStop
0x3014	SettingAddress_PixelFormatAddress	31 - 0	0b00000000000000000110000000001100		This register shall provide the address in the manufacturer-specific register space of PixelFormat
0x3018	SettingAddress_DeviceTapGeometryAddress	31 - 0	0b00000000000000000110000000010000		This register shall provide the address in the manufacturer-specific register space of DeviceTapGeometry
0x301c	SettingAddress_Image1StreamIDAddress	31 - 0	0b00000000000000000110000000010100		This register shall provide the address in the manufacturer-specific register space of Image<n>StreamID Image<n>StreamIDAddress shall be set to 0 for stream numbers that are not supported by the Device
0x4004	StreamSettings_DeviceConnectionID	31 - 0	0b00000000000000000000000000000000		Proxima has only one connect (a master connection) , Connection ID of 0 means that the connection is a Master connection
0x400c	StreamSettings_ControlPacketSizeMax	31 - 0	0b00000000000000000000000100000000		This register shall provide the maximum control packet size the Host can read from the Device, or write to the Device. The size is defined in bytes, and shall be a multiple of 4 bytes. The defined size is that of the entire packet, not just the payload. Comment: The control packet size is at least 132 bytes for version 2.x Devices. Have chosen 256 bytes, the same as Proxima v1
0x4018	StreamSettings_ConnectionConfigDefault	31 - 0	0b00000000000000010000000000101000		This register shall provide the value of the ConnectionConfig register that allows the Device to operate in its recommended mode.

Copyright © Magics Technologies NV / Confidential information

MAG-CXP00002-NP- CoaXPress Serializer ASIC

0x4038	StreamSettings_ElectricalComplianceTest	31 - 0	0b00000000000000000000000000000000		Used during electrical compliance testing only
0x403c	StreamSettings_CapabilityRegister	31 - 0	0b00000000000000000000000000000000		Proxima will not support "GenDc", "ExtraLsTrigger", "LinkSharing" and HsUpConnection"
0x4040	StreamSettings_FeatureControlRegister	31 - 0	0b00000000000000000000000000000000		This register shall be used to enable or disable optional Device features ("GenDc", "ExtraLsTrigger", "LinkSharing" and HsUpConnection")
0x404c	StreamSettings_LinkSharingStatus	31 - 0	0b00000000000000000000000000000000		This register shall only be supported if LinkSharing is supported, as indicated by CapabilityRegister bit LinkSharingSupported --> Remove
0x4050	StreamSettings_LinkSharingHorizontalStripeCount	31 - 0	0b00000000000000000000000000000000		This register shall only be supported if LinkSharing is supported, as indicated by CapabilityRegister bit LinkSharingSupported --> Remove
0x4054	StreamSettings_LinkSharingVerticalStripeCount	31 - 0	0b00000000000000000000000000000000		This register shall only be supported if LinkSharing is supported, as indicated by CapabilityRegister bit LinkSharingSupported --> Remove
0x4058	StreamSettings_LinkSharingHorizontalOverlap	31 - 0	0b00000000000000000000000000000000		This register shall only be supported if LinkSharing is supported, as indicated by CapabilityRegister bit LinkSharingSupported --> Remove
0x405c	StreamSettings_LinkSharingVerticalOverlap	31 - 0	0b00000000000000000000000000000000		This register shall only be supported if LinkSharing is supported, as indicated by CapabilityRegister bit LinkSharingSupported --> Remove
0x4060	StreamSettings_LinkSharingDuplicateStripe	31 - 0	0b00000000000000000000000000000000		This register shall only be supported if LinkSharing is supported, as indicated by CapabilityRegister bit LinkSharingSupported --> Remove
0x6010	AcquisitionSettings_DeviceTapGeometry	31 - 0	0b00000000000000000000000000000000		Default tap geometry 1X1Y
0x6014	AcquisitionSettings_Image1StreamID	31 - 0	0b00000000000000000000000000000000		First and only image stream has id 0
0x6030	IIDC2EntryImager_Keyword	31 - 0	0b01001001010010010100010001000011	Active_High	This indicates the start of the IIDC2Entry with the keyword ("IIDC") in ASCI
0x6034	IIDC2EntryImager_SubMinorVersionNumber	7 - 0	0b00000000	Active_High	Indicates the version of IIDC specification
0x6034	IIDC2EntryImager_MinorVersionNumber	15 - 8	0b00000010	Active_High	Indicates the version of IIDC specification
0x6034	IIDC2EntryImager_MajorVersionNumber	23 - 16	0b00010000	Active_High	Indicates the version of IIDC specification
0x6038	IIDC2EntryImager_NumberOfCategoryBlocks	15 - 0	0b0000000001000001	Active_High	Indicates the number of CategoryBlock a device has. It includes reserved space
0x6040	IIDC2EntryImager_OffsetForXmlManifestTable	31 - 0	0b00000000000000000000000000000000	Active_High	Indicates offset address of XML Manifest table, if transport layer has no XML. (CxP does)
0x60d0	Analog_SizeOfCategoryBlock	23 - 0	0b000000000000000000110100	Active_High	Indicates the total size of the Category including the header
0x60d0	Analog_CategoryBlockNumber	31 - 24	0b00011010	Active_High	Indicates the CategoryNumber
0x60f0	Analog_NoSpecifyInq	0 - 0	0b0	Active_High	Device can't set the value to device specific values
0x60f0	Analog_ManualInq	1 - 1	0b1	Active_High	Manual control is supported
0x60f0	Analog_AutoInq	2 - 2	0b0	Active_High	Auto adjustment by the device only once isn't possible
0x60f0	Analog_AutoOnceInq	3 - 3	0b0	Active_High	Auto adjustment by the device only once isn't possible
0x60f0	Analog_DefaultInq	4 - 4	0b0	Active_High	Loading the default value in the register again isn't possible
0x60f0	Analog_ValueType	23 - 16	0b10110001	Active_High	Array type is variable type + 0x80 so in this case: 0x31 + 0x80 = B1
0x60f0	Analog_Readable	24 - 24	0b1	Active_High	BasicCSR is readable
0x60f0	Analog_Writable	25 - 25	0b1	Active_High	BasicCSR is writable
0x60f0	Analog_UserSetLoadable	26 - 26	0b0	Active_High	-
0x60f0	Analog_Active	30 - 30	0b1	Active_High	BasicCSR is active
0x60f0	Analog_Implemented	31 - 31	0b1	Active_High	BasicCSR is implemented
0x60f4	Analog_OffsetForExpanded	31 - 0	0b00000000000000000000000000000000	Active_High	-
0x60f8	Analog_Control	3 - 0	0b0001	Active_High	Always manual mode

Copyright © Magics Technologies NV / Confidential information

MAG-CXP00002-NP- CoaXPress Serializer ASIC

0x60fc	Analog_NumberOfElements	30 - 0	0b00000000000000000000000000000001	Active_High	Equal to the number of 32-bit values that need to be set in this control
0x60fc	Analog_MoreDimension	31 - 31	0b0	Active_High	To indicate it is only a 1D array
0xa000	XMLURL	31 - 0	0b01010111011001010110001000111010		XML URL as a string
0xa004	XMLURL	31 - 0	0b01101000011101000111010001110000		XML URL as a string
0xa008	XMLURL	31 - 0	0b00111010001011110010111101110111		XML URL as a string
0xa00c	XMLURL	31 - 0	0b01110111011101110010111001101101		XML URL as a string
0xa010	XMLURL	31 - 0	0b01100001011001110110100101100011		XML URL as a string
0xa014	XMLURL	31 - 0	0b01110011001011100111010001100101		XML URL as a string
0xa018	XMLURL	31 - 0	0b01100011011010000010111101111000		XML URL as a string
0xa01c	XMLURL	31 - 0	0b01101101011011000010111101101101		XML URL as a string
0xa020	XMLURL	31 - 0	0b01100001011001110110100101100011		XML URL as a string
0xa024	XMLURL	31 - 0	0b01110011010111110110001101111000		XML URL as a string
0xa028	XMLURL	31 - 0	0b01110000011101100011001000101110		XML URL as a string
0xa02c	XMLURL	31 - 0	0b01111000011011010110110000000000		XML URL as a string
0xb000	AcquisitionControl_SizeOfCategoryBlock	23 - 0	0b000000000000000011100000		Indicates the total size of the Category including the header
0xb000	AcquisitionControl_CategoryBlockNumber	31 - 24	0b00000011		Indicates the CategoryNumber
0xb020	AcquisitionCommand_ValueType	23 - 16	0b00000011		ValueType is an Enumeration
0xb020	AcquisitionCommand_Readable	24 - 24	0b1		BasicCSR is readable
0xb020	AcquisitionCommand_Writable	25 - 25	0b1		BasicCSR is writable
0xb020	AcquisitionCommand_UserSetLoadable	26 - 26	0b0		-
0xb020	AcquisitionCommand_Active	30 - 30	0b1		Feature is active
0xb020	AcquisitionCommand_Implemented	31 - 31	0b1		BasicCSR is implemented
0xb024	AcquisitionCommand_OffsetForExpanded	31 - 0	0b00000000000000000000000000000000		-
0xb028	AcquisitionCommand_Control	3 - 0	0b0001		Manual control is selected
0xb038	AcquisitionCommand_Abort	0 - 0	0b0		Isn't supported
0xb038	AcquisitionCommand_Stop	1 - 1	0b1		Stop capturing and transferring data after current transmitting frame is finished
0xb038	AcquisitionCommand_Continuous	8 - 8	0b1		Start capturing and transferring data continuously
0xb038	AcquisitionCommand_MultiFrame	9 - 9	0b1		Start capturing and transferring multiple frames. The number of capturing / transferring frames are defined by AcquisitionFrameCount. After transmission is finished, this field turns to Stop
0xb038	AcquisitionCommand_ImageBufferRead	10 - 10	0b0		Isn't supported
0xb038	AcquisitionCommand_Retransmit	16 - 16	0b0		Isn't supported
0xb040	AcquisitionFrameCount_ValueType	23 - 16	0b00110000		Integer32
0xb040	AcquisitionFrameCount_Readable	24 - 24	0b1		BasicCSR is readable
0xb040	AcquisitionFrameCount_Writable	25 - 25	0b1		BasicCSR is writable
0xb040	AcquisitionFrameCount_UserSetLoadable	26 - 26	0b0		-
0xb040	AcquisitionFrameCount_Active	30 - 30	0b1		Feature is active
0xb040	AcquisitionFrameCount_Implemented	31 - 31	0b1		BasicCSR is implemented
0xb044	AcquisitionFrameCount_OffsetForExpanded	31 - 0	0b00000000000000000000000000000000		-
0xb048	AcquisitionFrameCount_Control	31 - 0	0b00000000000000000000000000000001		Manual control is selected
0xb054	AcquisitionFrameCount_Min	31 - 0	0b00000000000000000000000000000001		Imager needs to capture atleast one frame

Copyright © Magics Technologies NV / Confidential information

MAG-CXP00002-NP- CoaXPress Serializer ASIC

0xb058	AcquisitionFrameCount_Max	31 - 0	0b00000000000000000111111111111111		Max burst is x frames (Digital team?)
0xb060	ImageBufferMode_Implemented	31 - 31	0b0		BasicCSR is not implemented
0xb080	ImageBufferFrameCount_Implemented	31 - 31	0b0		BasicCSR is not implemented
0xb0a0	AcquisitionFrameRate_NoSpecifyInq	0 - 0	0b0		Device can't set the value to device specific values
0xb0a0	AcquisitionFrameRate_ManualInq	1 - 1	0b1		Manual control is supported
0xb0a0	AcquisitionFrameRate_DefaultInq	4 - 4	0b0		Loading the default value in the register again isn't possible
0xb0a0	AcquisitionFrameRate_ValueType	23 - 16	0b00110000		Integer32
0xb0a0	AcquisitionFrameRate_Readable	24 - 24	0b1		BasicCSR is readable
0xb0a0	AcquisitionFrameRate_Writable	25 - 25	0b1		BasicCSR is writable
0xb0a0	AcquisitionFrameRate_UserSetLoadable	26 - 26	0b0		-
0xb0a0	AcquisitionFrameRate_Active	30 - 30	0b1		Feature is active
0xb0a0	AcquisitionFrameRate_Implemented	31 - 31	0b1		BasicCSR is implemented
0xb0a4	AcquisitionFrameRate_OffsetForExpanded	31 - 0	0b00000000000000000000000000000000		-
0xb0a8	AcquisitionFrameRate_Control	3 - 0	0b0001		Manual control is selected
0xb0ac	AcquisitionFrameRate_Mult	31 - 0	0b00000000000000000000000000000001		In what steps will we make the fps programmable?
0xb0b0	AcquisitionFrameRate_Div	31 - 0	0b00000000000000000000000000000001		In what steps will we make the fps programmable?
0xb0b4	AcquisitionFrameRate_Min	31 - 0	0b00000000000000000000000000000101		Minimum frame rate depending on the resolution? (VGA)
0xb0b8	AcquisitionFrameRate_Max	31 - 0	0b00000000000000000000000100101100		Will use datasheet to inform customer for max FPS per resolution.
0xb0c0	AcquisitionFrameInterval_Implemented	31 - 31	0b0		Active_High
0xc400	VendorUniqueBootstrapFSM_SizeOfCategoryBlock	23 - 0	0b000000000000000000110100	Active_High	Indicates the total size of the Category including the header
0xc400	VendorUniqueBootstrapFSM_CategoryBlockNumber	31 - 24	0b00011010	Active_High	Indicates the CategoryNumber
0xc420	VendorUniqueBootstrapFSM_NoSpecifyInq	0 - 0	0b0	Active_High	Device can't set the value to device specific values
0xc420	VendorUniqueBootstrapFSM_ManualInq	1 - 1	0b1	Active_High	Manual control is supported
0xc420	VendorUniqueBootstrapFSM_AutoInq	2 - 2	0b0	Active_High	Auto adjustment by the device only once isn't possible
0xc420	VendorUniqueBootstrapFSM_AutoOnceInq	3 - 3	0b0	Active_High	Auto adjustment by the device only once isn't possible
0xc420	VendorUniqueBootstrapFSM_DefaultInq	4 - 4	0b0	Active_High	Loading the default value in the register again isn't possible
0xc420	VendorUniqueBootstrapFSM_ValueType	23 - 16	0b10110001	Active_High	Array type is variable type + 0x80 so in this case: 0x31 + 0x80 = B1
0xc420	VendorUniqueBootstrapFSM_Readable	24 - 24	0b1	Active_High	BasicCSR is readable
0xc420	VendorUniqueBootstrapFSM_Writable	25 - 25	0b1	Active_High	BasicCSR is writable
0xc420	VendorUniqueBootstrapFSM_UserSetLoadable	26 - 26	0b0	Active_High	-
0xc420	VendorUniqueBootstrapFSM_Active	30 - 30	0b1	Active_High	BasicCSR is active
0xc420	VendorUniqueBootstrapFSM_Implemented	31 - 31	0b1	Active_High	BasicCSR is implemented
0xc424	VendorUniqueBootstrapFSM_OffsetForExpanded	31 - 0	0b00000000000000000000000000000000	Active_High	-
0xc428	VendorUniqueBootstrapFSM_Control	3 - 0	0b0001	Active_High	Always manual mode
0xc42c	VendorUniqueBootstrapFSM_NumberOfElements	30 - 0	0b00000000000000000000000000000001	Active_High	Equal to the number of 32-bit values that need to be set in this control
0xc42c	VendorUniqueBootstrapFSM_MoreDimension	31 - 31	0b0	Active_High	To indicate it is only a 1D array
0xd400	VendorUniqueSPIGPIO_SizeOfCategoryBlock	23 - 0	0b000000000000000000110100	Active_High	Indicates the total size of the Category including the header
0xd400	VendorUniqueSPIGPIO_CategoryBlockNumber	31 - 24	0b00011010	Active_High	Indicates the CategoryNumber
0xd420	VendorUniqueSPIGPIO_NoSpecifyInq	0 - 0	0b0	Active_High	Device can't set the value to device specific values
0xd420	VendorUniqueSPIGPIO_ManualInq	1 - 1	0b1	Active_High	Manual control is supported
0xd420	VendorUniqueSPIGPIO_AutoInq	2 - 2	0b0	Active_High	Auto adjustment by the device only once isn't possible

Copyright © Magics Technologies NV / Confidential information

MAG-CXP00002-NP- CoaXPress Serializer ASIC

0xd420	VendorUniqueSPIGPIO_AutoOnceInq	3 - 3	0b0	Active_High	Auto adjustment by the device only once isn't possible
0xd420	VendorUniqueSPIGPIO_DefaultInq	4 - 4	0b0	Active_High	Loading the default value in the register again isn't possible
0xd420	VendorUniqueSPIGPIO_ValueType	23 - 16	0b10110001	Active_High	Array type is variable type + 0x80 so in this case: 0x31 + 0x80 = B1
0xd420	VendorUniqueSPIGPIO_Readable	24 - 24	0b1	Active_High	BasicCSR is readable
0xd420	VendorUniqueSPIGPIO_Writable	25 - 25	0b1	Active_High	BasicCSR is writable
0xd420	VendorUniqueSPIGPIO_UserSetLoadable	26 - 26	0b0	Active_High	-
0xd420	VendorUniqueSPIGPIO_Active	30 - 30	0b1	Active_High	BasicCSR is active
0xd420	VendorUniqueSPIGPIO_Implemented	31 - 31	0b1	Active_High	BasicCSR is implemented
0xd424	VendorUniqueSPIGPIO_OffsetForExpanded	31 - 0	0b00000000000000000000000000000000	Active_High	-
0xd428	VendorUniqueSPIGPIO_Control	3 - 0	0b0001	Active_High	Always manual mode
0xd42c	VendorUniqueSPIGPIO_NumberOfElements	30 - 0	0b00000000000000000000000000000001	Active_High	Equal to the number of 32-bit values that need to be set in this control
0xd42c	VendorUniqueSPIGPIO_MoreDimension	31 - 31	0b0	Active_High	To indicate it is only a 1D array
0xe000	DigitalIOControl_SizeOfCategoryBlock	23 - 0	0b000000000000000011100000	Active_High	Indicates the total size of the Category including the header
0xe000	DigitalIOControl_CategoryBlockNumber	31 - 24	0b00001001	Active_High	Indicates the CategoryNumber
0xe020	IOLineModeAll_NoSpecifyInq	0 - 0	0b0	Active_High	Device can't set the value to device specific values
0xe020	IOLineModeAll_ManualInq	1 - 1	0b1	Active_High	Manual control is supported
0xe020	IOLineModeAll_AutoInq	2 - 2	0b0	Active_High	Auto adjustment by the device only once isn't possible
0xe020	IOLineModeAll_AutoOnceInq	3 - 3	0b0	Active_High	Auto adjustment by the device only once isn't possible
0xe020	IOLineModeAll_DefaultInq	4 - 4	0b0	Active_High	Loading the default value in the register again isn't possible
0xe020	IOLineModeAll_ValueType	23 - 16	0b00110100	Active_High	Array type is variable type + 0x80 so in this case: 0x31 + 0x80 = B1
0xe020	IOLineModeAll_Readable	24 - 24	0b1	Active_High	BasicCSR is readable
0xe020	IOLineModeAll_Writable	25 - 25	0b1	Active_High	BasicCSR is writable
0xe020	IOLineModeAll_UserSetLoadable	26 - 26	0b0	Active_High	-
0xe020	IOLineModeAll_Active	30 - 30	0b1	Active_High	BasicCSR is active
0xe020	IOLineModeAll_Implemented	31 - 31	0b1	Active_High	BasicCSR is implemented
0xe024	IOLineModeAll_OffsetForExpanded	31 - 0	0b00000000000000000000000000000000	Active_High	-
0xe028	IOLineModeAll_Control	3 - 0	0b0001	Active_High	Always manual mode
0xe02c	IOLineModeAll_BitWriteable	31 - 0	0b00000000000000001111111111111111	Active_High	To indicate it is only a 1D array
0xe040	IOLineInverterAll_NoSpecifyInq	0 - 0	0b0	Active_High	Device can't set the value to device specific values
0xe040	IOLineInverterAll_ManualInq	1 - 1	0b1	Active_High	Manual control is supported
0xe040	IOLineInverterAll_AutoInq	2 - 2	0b0	Active_High	Auto adjustment by the device only once isn't possible
0xe040	IOLineInverterAll_AutoOnceInq	3 - 3	0b0	Active_High	Auto adjustment by the device only once isn't possible
0xe040	IOLineInverterAll_DefaultInq	4 - 4	0b0	Active_High	Loading the default value in the register again isn't possible
0xe040	IOLineInverterAll_ValueType	23 - 16	0b00110100	Active_High	Array type is variable type + 0x80 so in this case: 0x31 + 0x80 = B1
0xe040	IOLineInverterAll_Readable	24 - 24	0b1	Active_High	BasicCSR is readable
0xe040	IOLineInverterAll_Writable	25 - 25	0b1	Active_High	BasicCSR is writable
0xe040	IOLineInverterAll_UserSetLoadable	26 - 26	0b0	Active_High	-
0xe040	IOLineInverterAll_Active	30 - 30	0b1	Active_High	BasicCSR is active
0xe040	IOLineInverterAll_Implemented	31 - 31	0b1	Active_High	BasicCSR is implemented
0xe044	IOLineInverterAll_OffsetForExpanded	31 - 0	0b00000000000000000000000000000000	Active_High	-
0xe048	IOLineInverterAll_Control	3 - 0	0b0001	Active_High	Always manual mode

Copyright © Magics Technologies NV / Confidential information

MAG-CXP00002-NP- CoaXPress Serializer ASIC

0xe04c	IOLineInverterAll_BitWriteable	31 - 0	0b00000000000000000111111111111111	Active_High	To indicate it is only a 1D array
0xe060	IOLineStatusAll_NoSpecifyInq	0 - 0	0b0	Active_High	Device can't set the value to device specific values
0xe060	IOLineStatusAll_ManualInq	1 - 1	0b1	Active_High	Manual control is supported
0xe060	IOLineStatusAll_AutoInq	2 - 2	0b0	Active_High	Auto adjustment by the device only once isn't possible
0xe060	IOLineStatusAll_AutoOnceInq	3 - 3	0b0	Active_High	Auto adjustment by the device only once isn't possible
0xe060	IOLineStatusAll_DefaultInq	4 - 4	0b0	Active_High	Loading the default value in the register again isn't possible
0xe060	IOLineStatusAll_ValueType	23 - 16	0b00110100	Active_High	Array type is variable type + 0x80 so in this case: 0x31 + 0x80 = B1
0xe060	IOLineStatusAll_Readable	24 - 24	0b1	Active_High	BasicCSR is readable
0xe060	IOLineStatusAll_Writable	25 - 25	0b1	Active_High	BasicCSR is writable
0xe060	IOLineStatusAll_UserSetLoadable	26 - 26	0b0	Active_High	-
0xe060	IOLineStatusAll_Active	30 - 30	0b1	Active_High	BasicCSR is active
0xe060	IOLineStatusAll_Implemented	31 - 31	0b1	Active_High	BasicCSR is implemented
0xe064	IOLineStatusAll_OffsetForExpanded	31 - 0	0b00000000000000000000000000000000	Active_High	-
0xe068	IOLineStatusAll_Control	3 - 0	0b0001	Active_High	Always manual mode
0xe06c	IOLineStatusAll_BitWriteable	31 - 0	0b00000000000000000111111111111111	Active_High	To indicate it is only a 1D array
0xe080	IOUserOutputValueAll_NoSpecifyInq	0 - 0	0b0	Active_High	Device can't set the value to device specific values
0xe080	IOUserOutputValueAll_ManualInq	1 - 1	0b1	Active_High	Manual control is supported
0xe080	IOUserOutputValueAll_AutoInq	2 - 2	0b0	Active_High	Auto adjustment by the device only once isn't possible
0xe080	IOUserOutputValueAll_AutoOnceInq	3 - 3	0b0	Active_High	Auto adjustment by the device only once isn't possible
0xe080	IOUserOutputValueAll_DefaultInq	4 - 4	0b0	Active_High	Loading the default value in the register again isn't possible
0xe080	IOUserOutputValueAll_ValueType	23 - 16	0b00110100	Active_High	Array type is variable type + 0x80 so in this case: 0x31 + 0x80 = B1
0xe080	IOUserOutputValueAll_Readable	24 - 24	0b1	Active_High	BasicCSR is readable
0xe080	IOUserOutputValueAll_Writable	25 - 25	0b1	Active_High	BasicCSR is writable
0xe080	IOUserOutputValueAll_UserSetLoadable	26 - 26	0b0	Active_High	-
0xe080	IOUserOutputValueAll_Active	30 - 30	0b1	Active_High	BasicCSR is active
0xe080	IOUserOutputValueAll_Implemented	31 - 31	0b1	Active_High	BasicCSR is implemented
0xe084	IOUserOutputValueAll_OffsetForExpanded	31 - 0	0b00000000000000000000000000000000	Active_High	-
0xe088	IOUserOutputValueAll_Control	3 - 0	0b0001	Active_High	Always manual mode
0xe08c	IOUserOutputValueAll_BitWriteable	31 - 0	0b00000000000000000111111111111111	Active_High	To indicate it is only a 1D array
0xe0a0	IOLineSelector_NoSpecifyInq	0 - 0	0b0	Active_High	Device can't set the value to device specific values
0xe0a0	IOLineSelector_ManualInq	1 - 1	0b1	Active_High	Manual control is supported
0xe0a0	IOLineSelector_AutoInq	2 - 2	0b0	Active_High	Auto adjustment by the device only once isn't possible
0xe0a0	IOLineSelector_AutoOnceInq	3 - 3	0b0	Active_High	Auto adjustment by the device only once isn't possible
0xe0a0	IOLineSelector_DefaultInq	4 - 4	0b0	Active_High	Loading the default value in the register again isn't possible
0xe0a0	IOLineSelector_ValueType	23 - 16	0b00110100	Active_High	Array type is variable type + 0x80 so in this case: 0x31 + 0x80 = B1
0xe0a0	IOLineSelector_Readable	24 - 24	0b1	Active_High	BasicCSR is readable
0xe0a0	IOLineSelector_Writable	25 - 25	0b1	Active_High	BasicCSR is writable
0xe0a0	IOLineSelector_UserSetLoadable	26 - 26	0b0	Active_High	-
0xe0a0	IOLineSelector_Active	30 - 30	0b1	Active_High	BasicCSR is active
0xe0a0	IOLineSelector_Implemented	31 - 31	0b1	Active_High	BasicCSR is implemented
0xe0a4	IOLineSelector_OffsetForExpanded	31 - 0	0b00000000000000000000000000000000	Active_High	-

Copyright © Magics Technologies NV / Confidential information

MAG-CXP00002-NP- CoaXPress Serializer ASIC

0xe0a8	IOLineSelector_Control	3 - 0	0b0001	Active_High	Always manual mode
0xe0ac	IOLineSelector_ListOfElements	31 - 0	0b00000000000000000000000000000000	Active_High	To indicate it is only a 1D array
0xe0c0	IOLineSource_NoSpecifyInq	0 - 0	0b0	Active_High	Device can't set the value to device specific values
0xe0c0	IOLineSource_ManualInq	1 - 1	0b1	Active_High	Manual control is supported
0xe0c0	IOLineSource_AutoInq	2 - 2	0b0	Active_High	Auto adjustment by the device only once isn't possible
0xe0c0	IOLineSource_AutoOnceInq	3 - 3	0b0	Active_High	Auto adjustment by the device only once isn't possible
0xe0c0	IOLineSource_DefaultInq	4 - 4	0b0	Active_High	Loading the default value in the register again isn't possible
0xe0c0	IOLineSource_ValueType	23 - 16	0b00110100	Active_High	Array type is variable type + 0x80 so in this case: 0x31 + 0x80 = B1
0xe0c0	IOLineSource_Readable	24 - 24	0b1	Active_High	BasicCSR is readable
0xe0c0	IOLineSource_Writable	25 - 25	0b1	Active_High	BasicCSR is writable
0xe0c0	IOLineSource_UserSetLoadable	26 - 26	0b0	Active_High	-
0xe0c0	IOLineSource_Active	30 - 30	0b1	Active_High	BasicCSR is active
0xe0c0	IOLineSource_Implemented	31 - 31	0b1	Active_High	BasicCSR is implemented
0xe0c4	IOLineSource_OffsetForExpanded	31 - 0	0b00000000000000000000000000000000	Active_High	-
0xe0c8	IOLineSource_Control	3 - 0	0b0001	Active_High	Always manual mode
0xe0cc	IOLineSource_ListOfElements	31 - 0	0b00000000000000000000000000000000	Active_High	To indicate it is only a 1D array
0xf800	TriggerControl_SizeOfCategoryBlock	23 - 0	0b000000000000000011100000	Active_High	Indicates the total size of the Category including the header
0xf800	TriggerControl_CategoryBlockNumber	31 - 24	0b00000111	Active_High	Indicates the CategoryNumber
0xf820	TriggerMode_ManualInq	1 - 1	0b1	Active_High	Manual control is supported
0xf820	TriggerMode_DefaultInq	4 - 4	0b0	Active_High	Loading the default value in the register again isn't possible
0xf820	TriggerMode_ValueType	23 - 16	0b00000011	Active_High	ValueType is an Enumeration
0xf820	TriggerMode_Readable	24 - 24	0b1	Active_High	BasicCSR is readable
0xf820	TriggerMode_Writable	25 - 25	0b1	Active_High	BasicCSR is writable
0xf820	TriggerMode_UserSetLoadable	26 - 26	0b0	Active_High	-
0xf820	TriggerMode_Active	30 - 30	0b1	Active_High	Feature is active
0xf820	TriggerMode_Implemented	31 - 31	0b1	Active_High	BasicCSR is implemented
0xf824	TriggerMode_OffsetForExpanded	31 - 0	0b00000000000000000000000000000000	Active_High	-
0xf828	TriggerMode_Control	3 - 0	0b0001	Active_High	Manual control is selected
0xf82c	TriggerMode_VendorSpecific0	24 - 24	0b0	Active_High	Not supported
0xf82c	TriggerMode_VendorSpecific1	25 - 25	0b0	Active_High	Not supported
0xf82c	TriggerMode_VendorSpecific2	26 - 26	0b0	Active_High	Not supported
0xf82c	TriggerMode_VendorSpecific3	27 - 27	0b0	Active_High	Not supported
0xf82c	TriggerMode_VendorSpecific4	28 - 28	0b0	Active_High	Not supported
0xf82c	TriggerMode_VendorSpecific5	29 - 29	0b0	Active_High	Not supported
0xf82c	TriggerMode_VendorSpecific6	30 - 30	0b0	Active_High	Not supported
0xf82c	TriggerMode_VendorSpecific7	31 - 31	0b0	Active_High	Not supported
0xf838	TriggerMode_Off	0 - 0	0b1	Active_High	Supported
0xf838	TriggerMode_On	1 - 1	0b1	Active_High	Supported
0xf860	TriggerSource_ManualInq	1 - 1	0b1	Active_High	Manual control is supported
0xf860	TriggerSource_DefaultInq	4 - 4	0b0	Active_High	Loading the default value in the register again isn't possible
0xf860	TriggerSource_ValueType	23 - 16	0b00000011	Active_High	Enumeration

Copyright © Magics Technologies NV / Confidential information

MAG-CXP00002-NP- CoaXPress Serializer ASIC

0xf860	TriggerSource_Readable	24 - 24	0b1	Active_High	BasicCSR is readable
0xf860	TriggerSource_Writable	25 - 25	0b1	Active_High	BasicCSR is writable
0xf860	TriggerSource_UserSetLoadable	26 - 26	0b0	Active_High	-
0xf860	TriggerSource_Active	30 - 30	0b1	Active_High	Feature is active
0xf860	TriggerSource_Implemented	31 - 31	0b1	Active_High	BasicCSR isn't implemented
0xf864	TriggerSource_OffsetForExpanded	31 - 0	0b00000000000000000000000000000000	Active_High	-
0xf868	TriggerSource_Control	3 - 0	0b0001	Active_High	Manual control is selected
0xf86c	TriggerSource_VendorSpecific0	24 - 24	0b1	Active_High	External pin as trigger is supported
0xf870	TriggerSource_SoftwareTrigger	0 - 0	0b1	Active_High	Software trigger is supported
0xf8c0	SoftwareTrigger_ManualInq	1 - 1	0b1	Active_High	Manual control is supported
0xf8c0	SoftwareTrigger_DefaultInq	4 - 4	0b0	Active_High	Loading the default value in the register again isn't possible
0xf8c0	SoftwareTrigger_ValueType	23 - 16	0b00000011	Active_High	Enumeration
0xf8c0	SoftwareTrigger_Readable	24 - 24	0b1	Active_High	BasicCSR is readable
0xf8c0	SoftwareTrigger_Writable	25 - 25	0b1	Active_High	BasicCSR is writable
0xf8c0	SoftwareTrigger_UserSetLoadable	26 - 26	0b0	Active_High	-
0xf8c0	SoftwareTrigger_Active	30 - 30	0b1	Active_High	Feature is active
0xf8c0	SoftwareTrigger_Implemented	31 - 31	0b1	Active_High	BasicCSR isn't implemented
0xf8c4	SoftwareTrigger_OffsetForExpanded	31 - 0	0b00000000000000000000000000000000	Active_High	-
0xf8c8	SoftwareTrigger_Control	3 - 0	0b0001	Active_High	Manual control is selected
0xf8d8	SoftwareTrigger_Inactive	0 - 0	0b1	Active_High	Is supported
0xf8d8	SoftwareTrigger_Activetable	1 - 1	0b1	Active_High	Is supported
0x10000	ImageFormatControl_SizeOfCategoryBlock	23 - 0	0b000000000000001000000000	Active_High	Indicates the total size of the Category including the header
0x10000	ImageFormatControl_CategoryBlockNumber	31 - 24	0b00000010	Active_High	Indicates the CategoryNumber
0x10020	ImageFormatSelector_Implemented	31 - 31	0b0	Active_High	BasicCSR is not implemented
0x10040	ApplyImageFormat_Implemented	31 - 31	0b0	Active_High	BasicCSR is not implemented
0x10060	ImageSize_NoSpecifyInq	0 - 0	0b0	Active_High	Device can't set the value to device specific values
0x10060	ImageSize_ManualInq	1 - 1	0b1	Active_High	Manual control is supported
0x10060	ImageSize_AutoInq	2 - 2	0b0	Active_High	Auto adjustment by the device isn't possible
0x10060	ImageSize_AutoOnceInq	3 - 3	0b0	Active_High	Auto adjustment by the device only once isn't possible
0x10060	ImageSize_DefaultInq	4 - 4	0b0	Active_High	Loading the default value in the register again isn't possible
0x10060	ImageSize_ValueType	23 - 16	0b00110101	Active_High	ValueType is an Rectangle32
0x10060	ImageSize_Readable	24 - 24	0b1	Active_High	BasicCSR is readable
0x10060	ImageSize_Writable	25 - 25	0b1	Active_High	BasicCSR is writable
0x10060	ImageSize_UserSetLoadable	26 - 26	0b0	Active_High	-
0x10060	ImageSize_Active	30 - 30	0b1	Active_High	Feature is active
0x10060	ImageSize_Implemented	31 - 31	0b1	Active_High	BasicCSR is implemented
0x10064	ImageSize_OffsetForExpanded	31 - 0	0b00000000000000000000000000000000	Active_High	-
0x10068	ImageSize_Control	3 - 0	0b0001	Active_High	Manual control is selected
0x1006c	ImageSize_MinOffsetX	31 - 0	0b00000000000000000000000000000000	Active_High	The minimum offset is 0
0x10070	ImageSize_IncOffsetX	31 - 0	0b00000000000000000000000000000010	Active_High	This is always 2, inheretant to the design of the ASIC
0x10074	ImageSize_MinWidth	31 - 0	0b00000000000000000000001010000000	Active_High	

Copyright © Magics Technologies NV / Confidential information

MAG-CXP00002-NP- CoaXPress Serializer ASIC

0x10078	ImageSize_IncWidth	31 - 0	0b00000000000000000000000000000010	Active_High	This is always 2, inheretant to the design of the ASIC
0x1007c	ImageSize_TotalSizeX	31 - 0	0b00000000000000000000010100000000	Active_High	The max size in X direction / width is 1920
0x10080	ImageSize_MinOffsetY	31 - 0	0b00000000000000000000000000000000	Active_High	The minimum offset is 0
0x10084	ImageSize_IncOffsetY	31 - 0	0b00000000000000000000000000000010	Active_High	this value is depending on the col_mono pad
0x10088	ImageSize_MinHeight	31 - 0	0b00000000000000000000000000111100000	Active_High	
0x1008c	ImageSize_IncHeight	31 - 0	0b00000000000000000000000000000010	Active_High	this value is depending on the col_mono pad
0x10090	ImageSize_TotalSizeY	31 - 0	0b00000000000000000000000000000000	Active_High	Total Y / Height is normal pixels + black pixels: 1080 + 32 + 32 = 1144
0x10094	ImageSize_OffsetX	15 - 0	0b0000001011010000	Active_High	
0x1009c	ImageSize_OffsetY	15 - 0	0b0000000000000000	Active_High	
0x100c0	PixelCoding_NoSpecifyInq	0 - 0	0b0	Active_High	Device can't set the value to device specific values
0x100c0	PixelCoding_ManualInq	1 - 1	0b1	Active_High	Manual control is supported
0x100c0	PixelCoding_AutoInq	2 - 2	0b0	Active_High	Auto adjustment by the device isn't possible
0x100c0	PixelCoding_AutoOnceInq	3 - 3	0b0	Active_High	Auto adjustment by the device only once isn't possible
0x100c0	PixelCoding_DefaultInq	4 - 4	0b0	Active_High	Loading the default value in the register again isn't possible
0x100c0	PixelCoding_ValueType	23 - 16	0b00000011	Active_High	ValueType is an Enumeration
0x100c0	PixelCoding_Readable	24 - 24	0b1	Active_High	BasicCSR is readable
0x100c0	PixelCoding_Writable	25 - 25	0b1	Active_High	BasicCSR is writable
0x100c0	PixelCoding_UserSetLoadable	26 - 26	0b0	Active_High	-
0x100c0	PixelCoding_Active	30 - 30	0b1	Active_High	BasicCSR is active
0x100c0	PixelCoding_Implemented	31 - 31	0b1	Active_High	BasicCSR is implemented
0x100c4	PixelCoding_OffsetForExpanded	31 - 0	0b00000000000000000000000000000000	Active_High	-
0x100c8	PixelCoding_Control	3 - 0	0b0001	Active_High	Manual control is selected
0x100cc	PixelCoding_BayerGR	1 - 1	0b1	Active_High	The default value is depending on the col_mono pad
0x100cc	PixelCoding_BayerGRPacked	3 - 3	0b0	Active_High	Isn't supported
0x100cc	PixelCoding_BayerRG	4 - 4	0b1	Active_High	The default value is depending on the col_mono pad
0x100cc	PixelCoding_BayerRGPacked	6 - 6	0b0	Active_High	Isn't supported
0x100cc	PixelCoding_BayerGB	7 - 7	0b1	Active_High	The default value is depending on the col_mono pad
0x100cc	PixelCoding_BayerGBPacked	9 - 9	0b0	Active_High	Isn't supported
0x100cc	PixelCoding_BayerBG	10 - 10	0b1	Active_High	The default value is depending on the col_mono pad
0x100cc	PixelCoding_BayerBGPacked	12 - 12	0b0	Active_High	Isn't supported
0x100d0	PixelCoding_YUV411Packed	4 - 4	0b0	Active_High	Isn't supported
0x100d0	PixelCoding_YUV422Packed	12 - 12	0b0	Active_High	Isn't supported
0x100d0	PixelCoding_YUV444Packed	20 - 20	0b0	Active_High	Isn't supported
0x100d4	PixelCoding_RGBPacked	2 - 2	0b0	Active_High	Isn't supported
0x100d4	PixelCoding_BGRPacked	10 - 10	0b0	Active_High	Isn't supported
0x100d8	PixelCoding_Mono	0 - 0	0b1	Active_High	Is supported
0x100d8	PixelCoding_MonoSigned	1 - 1	0b0	Active_High	Isn't supported
0x100d8	PixelCoding_MonoPacked	2 - 2	0b0	Active_High	Isn't supported
0x100e0	PixelSize_NoSpecifyInq	0 - 0	0b0	Active_High	Device can't set the value to device specific values
0x100e0	PixelSize_ManualInq	1 - 1	0b1	Active_High	Manual control is supported
0x100e0	PixelSize_AutoInq	2 - 2	0b0	Active_High	Auto adjustment by the device isn't possible

Copyright © Magics Technologies NV / Confidential information

MAG-CXP00002-NP- CoaXPress Serializer ASIC

0x100e0	PixelSize_AutoOnceInq	3 - 3	0b0	Active_High	Auto adjustment by the device only once isn't possible
0x100e0	PixelSize_DefaultInq	4 - 4	0b0	Active_High	Loading the default value in the register again isn't possible
0x100e0	PixelSize_ValueType	23 - 16	0b00000011	Active_High	ValueType is an Enumeration
0x100e0	PixelSize_Readable	24 - 24	0b1	Active_High	BasicCSR is readable
0x100e0	PixelSize_Writable	25 - 25	0b1	Active_High	BasicCSR is writable
0x100e0	PixelSize_UserSetLoadable	26 - 26	0b0	Active_High	-
0x100e0	PixelSize_Active	30 - 30	0b1	Active_High	Feature is active
0x100e0	PixelSize_Implemented	31 - 31	0b1	Active_High	BasicCSR is implemented
0x100e4	PixelSize_OffsetForExpanded	31 - 0	0b00000000000000000000000000000000	Active_High	-
0x100e8	PixelSize_Control	3 - 0	0b0001	Active_High	Manual control is selected
0x100f4	PixelSize_Bpp48	16 - 16	0b0	Active_High	48-bit output isn't supported
0x100f8	PixelSize_Bpp8	8 - 8	0b1	Active_High	8-bit output is supported
0x100f8	PixelSize_Bpp10	10 - 10	0b1	Active_High	10-bit output is supported
0x100f8	PixelSize_Bpp12	12 - 12	0b1	Active_High	12-bit output is supported
0x100f8	PixelSize_Bpp14	14 - 14	0b0	Active_High	14-bit output isn't supported
0x100f8	PixelSize_Bpp16	16 - 16	0b0	Active_High	16-bit output isn't supported
0x100f8	PixelSize_Bpp24	24 - 24	0b0	Active_High	24-bit output isn't supported
0x10100	PixelEndian_Implemented	31 - 31	0b0	Active_High	BasicCSR is not implemented
0x10120	BinningHorizontal_Implemented	31 - 31	0b0	Active_High	BasicCSR is not implemented
0x10140	BinningVertical_Implemented	31 - 31	0b0	Active_High	BasicCSR is not implemented
0x10160	DecimationHorizontal_NoSpecifyInq	0 - 0	0b0		Device can't set the value to device specific values
0x10160	DecimationHorizontal_ManualInq	1 - 1	0b1		Manual control is supported
0x10160	DecimationHorizontal_AutoInq	2 - 2	0b0		Auto adjustment by the device isn't possible
0x10160	DecimationHorizontal_AutoOnceInq	3 - 3	0b0		Auto adjustment by the device only once isn't possible
0x10160	DecimationHorizontal_DefaultInq	4 - 4	0b0		Loading the default value in the register again isn't possible
0x10160	DecimationHorizontal_ValueType	23 - 16	0b00110000		Integer32
0x10160	DecimationHorizontal_Readable	24 - 24	0b1		BasicCSR is readable
0x10160	DecimationHorizontal_Writable	25 - 25	0b1		BasicCSR is writable
0x10160	DecimationHorizontal_UserSetLoadable	26 - 26	0b0		-
0x10160	DecimationHorizontal_Active	30 - 30	0b1		Feature is active
0x10160	DecimationHorizontal_Implemented	31 - 31	0b1	Active_High	BasicCSR is implemented
0x10164	DecimationHorizontal_OffsetForExpanded	31 - 0	0b00000000000000000000000000000000		-
0x10168	DecimationHorizontal_Control	3 - 0	0b0001		Manual control is selected
0x1016c	DecimationHorizontal_Mult	31 - 0	0b00000000000000000000000000000010		In steps of x pixels at a time
0x10170	DecimationHorizontal_Div	31 - 0	0b00000000000000000000000000000010		In steps of x pixels at a time
0x10174	DecimationHorizontal_Min	31 - 0	0b00000000000000000000000000000000		Minimum subsampling rate, 0 (sub sampling off)
0x10178	DecimationHorizontal_Max	31 - 0	0b00000000000000000000000000001000		Maximum sub sampling rate that will be supported is 8 (2 bits)
0x10180	DecimationVertical_NoSpecifyInq	0 - 0	0b0		Device can't set the value to device specific values
0x10180	DecimationVertical_ManualInq	1 - 1	0b1		Manual control is supported
0x10180	DecimationVertical_AutoInq	2 - 2	0b0		Auto adjustment by the device isn't possible
0x10180	DecimationVertical_AutoOnceInq	3 - 3	0b0		Auto adjustment by the device only once isn't possible

Copyright © Magics Technologies NV / Confidential information

MAG-CXP00002-NP- CoaXPress Serializer ASIC

0x10180	DecimationVertical_DefaultInq	4 - 4	0b0		Loading the default value in the register again isn't possible
0x10180	DecimationVertical_ValueType	23 - 16	0b00110000		Integer32
0x10180	DecimationVertical_Readable	24 - 24	0b1		BasicCSR is readable
0x10180	DecimationVertical_Writable	25 - 25	0b1		BasicCSR is writable
0x10180	DecimationVertical_UserSetLoadable	26 - 26	0b0		-
0x10180	DecimationVertical_Active	30 - 30	0b1		Feature is active
0x10180	DecimationVertical_Implemented	31 - 31	0b1	Active_High	BasicCSR is implemented
0x10184	DecimationVertical_OffsetForExpanded	31 - 0	0b00000000000000000000000000000000		-
0x10188	DecimationVertical_Control	3 - 0	0b0001		Manual control is selected
0x1018c	DecimationVertical_Mult	31 - 0	0b00000000000000000000000000000010		In steps of x pixels at a time
0x10190	DecimationVertical_Div	31 - 0	0b00000000000000000000000000000010		In steps of x pixels at a time
0x10194	DecimationVertical_Min	31 - 0	0b00000000000000000000000000000000		Minimum subsampling rate, 0 (sub sampling off)
0x10198	DecimationVertical_Max	31 - 0	0b00000000000000000000000000001000		Maximum sub sampling rate that will be supported is 8 (2 bits)
0x101a0	ReverseX_NoSpecifyInq	0 - 0	0b0		Device can't set the value to device specific values
0x101a0	ReverseX_ManualInq	1 - 1	0b1		Manual control is supported
0x101a0	ReverseX_AutoInq	2 - 2	0b0		Auto adjustment by the device isn't possible
0x101a0	ReverseX_AutoOnceInq	3 - 3	0b0		Auto adjustment by the device only once isn't possible
0x101a0	ReverseX_DefaultInq	4 - 4	0b0		Loading the default value in the register again isn't possible
0x101a0	ReverseX_ValueType	23 - 16	0b00110100		BulkBoolean32
0x101a0	ReverseX_Readable	24 - 24	0b1		BasicCSR is readable
0x101a0	ReverseX_Writable	25 - 25	0b1		BasicCSR is writable
0x101a0	ReverseX_UserSetLoadable	26 - 26	0b0		-
0x101a0	ReverseX_Active	30 - 30	0b1		Feature is active
0x101a0	ReverseX_Implemented	31 - 31	0b1	Active_High	BasicCSR is implemented
0x101a4	ReverseX_OffsetForExpanded	31 - 0	0b00000000000000000000000000000000		-
0x101a8	ReverseX_Control	3 - 0	0b0001		Manual control is selected
0x101ac	ReverseX_BitWritable	0 - 0	0b1		Indicates that ReverseX is writable
0x101c0	ReverseY_NoSpecifyInq	0 - 0	0b0		Device can't set the value to device specific values
0x101c0	ReverseY_ManualInq	1 - 1	0b1		Manual control is supported
0x101c0	ReverseY_AutoInq	2 - 2	0b0		Auto adjustment by the device isn't possible
0x101c0	ReverseY_AutoOnceInq	3 - 3	0b0		Auto adjustment by the device only once isn't possible
0x101c0	ReverseY_DefaultInq	4 - 4	0b0		Loading the default value in the register again isn't possible
0x101c0	ReverseY_ValueType	23 - 16	0b00110100		BulkBoolean32
0x101c0	ReverseY_Readable	24 - 24	0b1		BasicCSR is readable
0x101c0	ReverseY_Writable	25 - 25	0b1		BasicCSR is writable
0x101c0	ReverseY_UserSetLoadable	26 - 26	0b0		-
0x101c0	ReverseY_Active	30 - 30	0b1		Feature is active
0x101c0	ReverseY_Implemented	31 - 31	0b1	Active_High	BasicCSR is implemented
0x101c4	ReverseY_OffsetForExpanded	31 - 0	0b00000000000000000000000000000000		-
0x101c8	ReverseY_Control	3 - 0	0b0001		Manual control is selected
0x101cc	ReverseY_BitWritable	0 - 0	0b1		Indicates that ReverseY is writable

Copyright © Magics Technologies NV / Confidential information

MAG-CXP00002-NP- CoaXPress Serializer ASIC

0x101e0	TestPattern_NoSpecifyInq	0 - 0	0b0		Device can't set the value to device specific values
0x101e0	TestPattern_ManualInq	1 - 1	0b1		Manual control is supported
0x101e0	TestPattern_AutoInq	2 - 2	0b0		Auto adjustment by the device isn't possible
0x101e0	TestPattern_AutoOnceInq	3 - 3	0b0		Auto adjustment by the device only once isn't possible
0x101e0	TestPattern_DefaultInq	4 - 4	0b0		Loading the default value in the register again isn't possible
0x101e0	TestPattern_ValueType	23 - 16	0b00000011		ValueType is an Enumeration
0x101e0	TestPattern_Readable	24 - 24	0b1		BasicCSR is readable
0x101e0	TestPattern_Writable	25 - 25	0b1		BasicCSR is writable
0x101e0	TestPattern_UserSetLoadable	26 - 26	0b0		-
0x101e0	TestPattern_Active	30 - 30	0b1		Feature is active
0x101e0	TestPattern_Implemented	31 - 31	0b1	Active_High	BasicCSR is implemented
0x101e4	TestPattern_OffsetForExpanded	31 - 0	0b00000000000000000000000000000000		-
0x101e8	TestPattern_Control	3 - 0	0b0001		Manual control is selected
0x101ec	TestPattern_VendorSpecific0	24 - 24	0b1		
0x101ec	TestPattern_VendorSpecific1	25 - 25	0b1		
0x101ec	TestPattern_VendorSpecific2	26 - 26	0b1		
0x101ec	TestPattern_VendorSpecific3	27 - 27	0b1		
0x101ec	TestPattern_VendorSpecific4	28 - 28	0b1		
0x101ec	TestPattern_VendorSpecific5	29 - 29	0b1		Implemented /supported
0x101ec	TestPattern_VendorSpecific6	30 - 30	0b0		Isn't supported
0x101ec	TestPattern_VendorSpecific7	31 - 31	0b0		Isn't supported
0x101f4	TestPattern_GreyHorizontalRampMoving	0 - 0	0b0		Isn't supported
0x101f4	TestPattern_GreyVerticalRampMoving	1 - 1	0b0		Isn't supported
0x101f4	TestPattern_HorizontalMoving	8 - 8	0b0		Isn't supported
0x101f4	TestPattern_VerticalLineMoving	9 - 9	0b0		Isn't supported
0x101f4	TestPattern_GreyScaleChart	17 - 17	0b1		Indicates that the imager can send a GreyScaleChart test image
0x101f8	TestPattern_Off	0 - 0	0b1		Indicates that the imager can send real life images
0x101f8	TestPattern_Black	1 - 1	0b1		Indicates that the imager can send a Black test image
0x101f8	TestPattern_White	2 - 2	0b1		Indicates that the imager can send a White test image
0x101f8	TestPattern_Grey55	3 - 3	0b1		Indicates that the imager can send a Grey55 test image
0x101f8	TestPattern_GreyAA	4 - 4	0b1		Indicates that the imager can send a GreyAA test image
0x101f8	TestPattern_GreyHorizontalRamp	16 - 16	0b1		Indicates that the imager can send a GreyHorizontalRamp test image
0x101f8	TestPattern_GreyVerticalRamp	17 - 17	0b1		Indicates that the imager can send a GreyVerticalRamp test image
0x101f8	TestPattern_StraightCounter	24 - 24	0b0		Isn't supported

Copyright © Magics Technologies NV / Confidential information

12. Product maturity levels

Magics uses the following product maturity levels:

Maturity	Description
PROTO	Functionality tested in typical voltage and temperature; no commitment on specification performance. Package may differ depending on availabilities.
EM	Characterization performed in typical voltage and temperature conditions. No commitment on specification performance.
EQM	Characterization performed over full voltage and temperature range.
PROD	Qualified parts, no screening for space use
FM	Qualified parts, screened for space use

13. Product versions

Product code	Maturity level availability	Description
MAG-CXP00002-NP	**EM, EQM, PROD**	Serializer ASIC in a plastic QFN-64 package.

13.1 Errata

Below a table can be found with some additional notes/errata.

Product code	Serial number	Errata
MAG-CXP00002-NP	**ALL**	- Test packet counter register mapping is incorrect for CXP standard: * Register address of TestPacketCountTxLsb is swapped with register address of TestPacketCountTxMsb in the register map. While TestPacketCountTxLsb will contain the correct value of the Lsb, it is at the wrong CXP-compliant address. *Register address of TestPacketCountRxLsb is swapped with register address of TestPacketCountRxMsb in the register map. While TestPacketCountRxLsb will contain the correct value of the Lsb, it is at the wrong CXP-compliant address.

Copyright © Magics Technologies NV

MAG-CXP00002-NP- CoaXPress Serializer ASIC

14. Revision information

Version number	Date	Change description
2023/10-rev1.0	2023-10-27	First release
2025/05-rev2.0	2025-05-06	- EM and EQM models available. - added VDD3V3_ANA pin to the application diagram. - updated packaging information. - added additional explanation to section 8.5. "In addition, the 'IOLineSource_Value' register needs to be set to 32 when a GPIO is set as an output." - Analog_chip_id is updated from 0x21 to 0x62. - added in section 9.1.4 an Important note. - added section with Errata (13.1). - added errata on TestPacketCount* registers. - added additional explanation for RNW bit in section 8.8 Debug SPI slave interface. Also added an important note on the physical connections to the interface. - for SEL/SEU robustness: added * by design – not validated
2025/11-rev2.1	2025-11-14	- updated description of PROD and FM maturity levels - updated disclaimer - added note on REF_CLK input: *Note: internal 330 Ohm load!* - added in section 9.1.4 an additional Important note (-2). - decreased the maximum junction temperature from 125 to 85 degrees C – to match the Vision System temperature requirements.
2026/04-rev2.2	2026-04-24	- removed watermark. - update of Figure 1. with an actual picture of the product. - added PROD models to availability of product.

Disclaimer

Magics Technologies' products are sold by description only. Magics Technologies reserves the right to make changes in circuit design, software and/or specifications at any time without notice for products in PROTO or EM maturity status. Accordingly, the reader is cautioned to verify that datasheets are current before placing orders. Information furnished by Magics Technologies is believed to be accurate and reliable. However, no responsibility is assumed by Magics Technologies for its use; nor for any infringements of patents or other rights of third parties which may result from its use. No license is granted by implication or otherwise under any patent or patent rights of Magics Technologies.

This development is co-funded in collaboration with Fusion For Energy.

For information regarding Magics Technologies and its products, see www.magics.tech