# MAG-VIS100xx-N- MAG-VIS Vision Modules

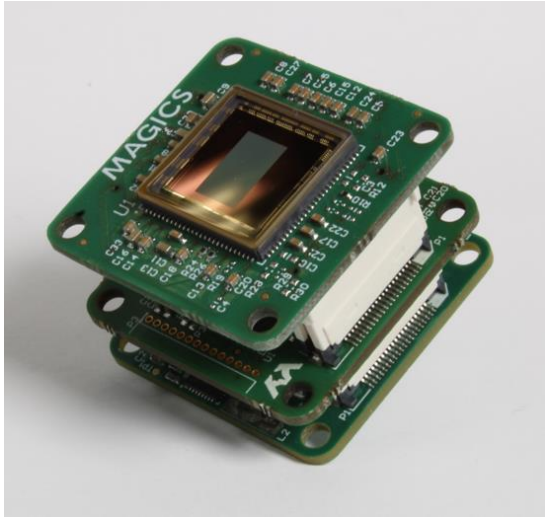


*Figure 1: Electronic Vision Module (MAG-VIS10014-N) – comprising Magics' ICs MAG-IMG00251-NC, MAG-CXP0002-NP and 2x MAG-PSU00001-NP.*

## 1. Description

The Magics' Vision Series portfolio contains products which are to be used as core building blocks of a radiation-hardened camera. Next to the standalone ICs in the Vision Series, Magics also offers full-blown electronic Vision modules, containing all ICs from the Vision Series, integrated in the form of a three-PCB stack up. The modules are the electronic heart of a radiation-hardened camera and contain at minimum the following Magics' ICs from the Vision Series:

- MAG-IMG002X1-NC: Full HD CMOS rad-hard image sensor
- MAG-PSU00001-NP: rad-hard DC/DC converter controller
- MAG-CXP00002-NP: CoaXPress serializer IC

Different variants with different features are offered as an end product (overview of product variants can be found in section 7), of which some also contain ICs from the Magics' Motion Series. By incorporating the Motion Series ICs, additional functionality, such as motorized lens control, can be added to the module.

Next to the Magics' ICs all the supporting electronics, as described in the application diagrams in the respective IC datasheets, are integrated into the module. These components include passives, such as resistors, inductors and capacitors, as well as a XTAL oscillator for clock reference input. In addition, there is a connector to supply power (9V) and a HD-BNC connector to interface a 75-Ohm coaxial cable for video transmission (downlink) and configuration data (uplink).

## 2. Key features

- Modular design consisting of three PCBs containing Magics' ICs and supporting components.
  - Electronic module can be integrated as is in a rad-hard camera. No additional electronic components required!
- Full HD (1920x1080) CMOS image sensor
  - >2Mpixel
  - Up to 30 FPS in Full HD mode
  - Electronic rolling shutter
  - > 60dB dynamic range
  - Available in monochrome and color version
    - RGGB Bayer pattern for color version
- Features
  - Image flipping
  - Dark pixel readout option
  - Programmable integration time
  - Configurable window modes (FHD, HD, VGA, etc.)
- Configurable operating mode
  - Triggered, burst and continuous mode
- CoaXPress video interface: 1.25Gbps single line CXP 2.0 device side interface
  - 1.25Gbps downlink communication
  - 20Mbps uplink communication
  - 75-Ohm coax cable – up to >150m depending on the quality of the cable
  - GenICam compliant
- On-board X-TAL clock of 20 MHz
- Single supply operation: 9V input voltage
  - Internally 3.3V and 1.8V supply voltages are generated
- Operating temperature: 0 to 50 degC ambient
- Different flavors with different functions available.
  - E.g. integrated motorized lens control.
- Radiation hardness:
  - > 1MGy TID (Si)
  - Single-event tolerance by design

Copyright © Magics Technologies NV / Confidential information

## 3. MAG-VIS modules and block diagrams

The core products of Magics Technologies are ICs and they form the base for all of our derived products. The ICs in the Vision Series are already listed above and are depicted in Figure 2.

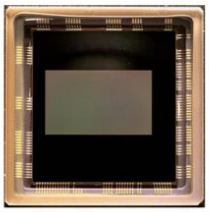

MAG-IMG00241-N: mono
MAG-IMG00251-N: color

MAG-CXP00002-NP

MAG-PSU00001-NP

*Figure 2: Three main ICs as part of the Magics' Vision Series. Note: MAG-IMG001X1-NC (JLCC-68 package) has become obsolete.*

### 3.1 MAG-VIS modules overview

Magics offers MAG-VIS modules in the form of a three-PCB stack, of which each PCB has his own function and components. Below the three PCBs in the stack of the MAG-VIS modules are listed:

- **PCB1**: this PCB contains the MAG-IMG002x1-NC FULL HD image sensor
- **PCB2**: this PCB contains a MAG-PSU00001-NP controller to generate the 1.8V supply for the imager (PCB1) and optionally additional functions are added to this PCB as well.
    - Different versions available, for example with a MAG-DRV00002-NP added to the design. See Table 2.
- **PCB3**: this PCB contains the MAG-CXP00002-NP CoaXPress-compatible serializer chip, and a MAG-PSU00001-NP to generate the 3.3V supply to supply the imager and the serializer.

To date, Magics offers three different variants of the MAG-VIS modules (six if differentiated between mono and color), and these modules are depicted in Figure 3.

MAG-VIS10003-N: mono
MAG-VIS10004-N: color

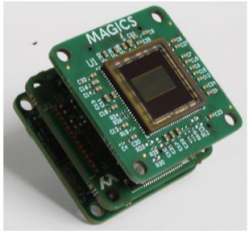


MAG-VIS10013-N: mono
MAG-VIS10014-N: color
Module without the MAG-DRV and the 14-pin connector

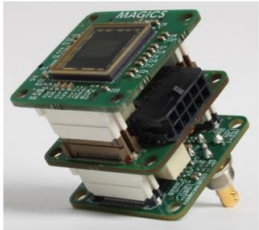

MAG-VIS10023-N: mono
MAG-VIS10024-N: color
Module with the MAG-DRV and the relays for motor control of lens

*Figure 3: MAG-VIS modules - three different variants.*

The six different MAG-VIS product codes are listed in the next table (Table 1), together with a listing of the corresponding PCBs integrated in the stack. Each of the modules contain different PCBs, each with a unique product code. These PCBs with product codes are visualized in Figure 4 and are listed in Table 2.

For the corresponding block diagrams of each of the modules, it is referred to section 3.3.

Copyright © Magics Technologies NV

*Table 1: Overview of the offered MAG-VIS modules.*

| MAG-VIS module | PCB1 | PCB2 | PCB3 | Description |
|---|---|---|---|---|
| **MAG-VIS10003-N** | MAG-VIS40003-N | MAG-VIS40011-N | MAG-VIS40031-N | MAG-VIS module as in MAG-CAM10003-N – mono imager |
| **MAG-VIS10004-N** | MAG-VIS40004-N | MAG-VIS40011-N | MAG-VIS40031-N | MAG-VIS module as in MAG-CAM10004-N – color imager |
| **MAG-VIS10013-N** | MAG-VIS40003-N | MAG-VIS40012-N | MAG-VIS40031-N | MAG-VIS module without MAG-DRV00002-NP and 14-pin connector on PCB2 – mono imager |
| **MAG-VIS10014-N** | MAG-VIS40004-N | MAG-VIS40012-N | MAG-VIS40031-N | MAG-VIS module without MAG-DRV00002-NP and 14-pin connector on PCB2 – color imager |
| **MAG-VIS10023-N** | MAG-VIS40003-N | MAG-VIS40021-N | MAG-VIS40031-N | MAG-VIS module with motorized lens control capability – mono imager |
| **MAG-VIS10024-N** | MAG-VIS40004-N | MAG-VIS40021-N | MAG-VIS40031-N | MAG-VIS module with motorized lens control capability – color imager |

## 3.2 MAG-VIS PCB overview

Each PCB within the MAG-VIS module stack has its own unique product code and is also available for individual purchase. Customers interested in this option are encouraged to contact sales@magics.tech. While detailed information regarding the interfaces and pinouts of the individual PCBs is beyond the scope of this datasheet, it can be provided upon request. The primary focus of this document is on the complete MAG-VIS module assemblies (section 3.1).

Each of the offered standalone PCBs of the MAG-VIS modules are depicted in Figure 1 with their corresponding product code. The complete list with additional details is listed in Table 2.

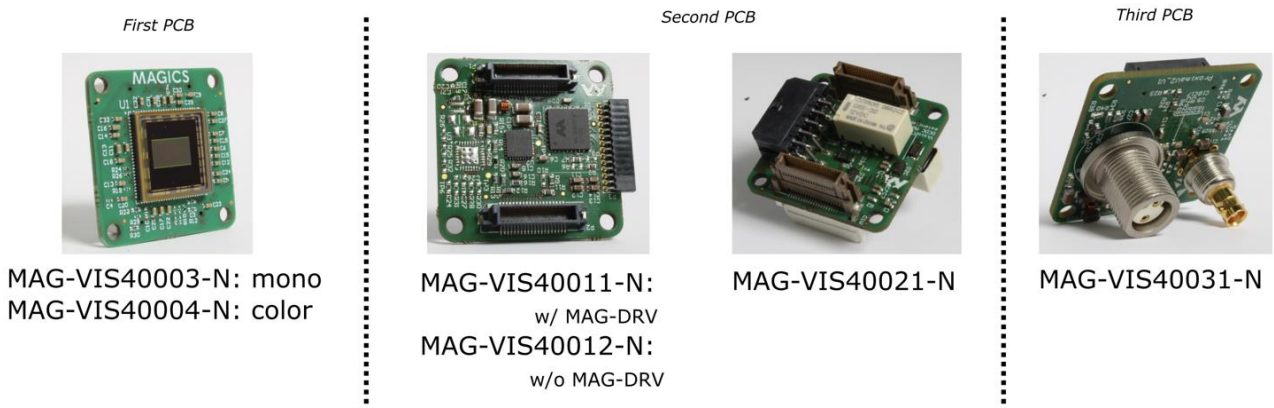


*Figure 4: MAG-VIS PCBs which are used in the MAG-VIS modules.*

Copyright © Magics Technologies NV

*Table 2: Overview of the PCB products in the MAG-VIS family*

| PCB | MAG-VIS PCB code | Description |
|---|---|---|
| PCB1 | MAG-VIS40003-N | PCB with MAG-IMG00241-N (mono) imager and passive components for biasing and filtering. |
| | MAG-VIS40004-N | PCB with MAG-IMG00251-N (color) imager and passive components for biasing and filtering. |
| PCB2 | MAG-VIS40011-N | PCB with MAG-PSU00001-NP to generate the 1.8V for the imager, with a MAG-DRV00002-NP integrated, whose outputs are accessible through a 14-pin connector at the side. |
| | MAG-VIS40012-N | PCB with a MAG-PSU00001-NP to generate the 1.8V for the imager. |
| | MAG-VIS40021-N | PCB with a MAG-PSU00001-NP to generate the 1.8V for the imager. Additionally, MAG-DRV00002-NP and relays are integrated to function as a DC motor controlled for a motorized lens. |
| PCB3 | MAG-VIS40031-N | PCB with a MAG-PSU00001-NP to generate the 3.3V for MAG-IMG002x1-NC, MAG-DRV00002-NP and MAG-CXP00002-NP, and one MAG-CXP00002-NP for video communication. |

## 3.3 Block diagrams of MAG-VIS modules

This section presents the block diagrams of the MAG-VIS modules. While the previous sections provided an overview of the different product variants, this section offers a more detailed look at the internal components and architecture of each module.

### 3.3.1 MAG-VIS1000x-N

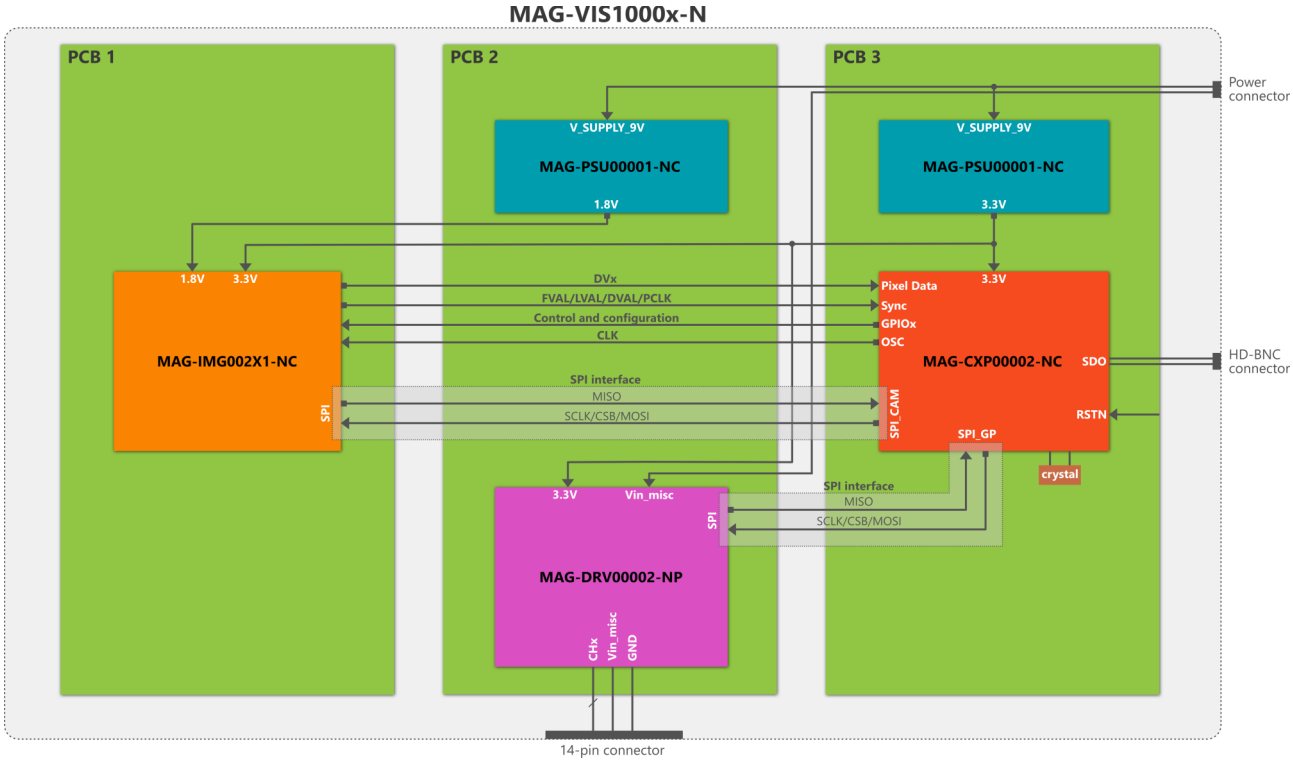


*Figure 5: Block diagram of MAG-VIS1000x-N module.*

# MAG-VIS100xx-N- MAG-VIS Vision Modules

The MAG-VIS1000x-N module is the version integrated into the MAG-CAM demonstrator, but it is also available as a radiation-hardened standalone product. While PCB1 and PCB3 are identical across the MAG-VIS1000x-N, MAG-VIS1001x-N, and MAG-VIS1002x-N variants, the difference lies in the middle PCB (PCB2). This central board defines the specific functionality of each module. A block diagram of the MAG-VIS1000x-N module is shown in Figure 5.

At the core of the module is a Full HD image sensor, mounted on PCB1, available in both monochrome (MAG-IMG00241-NC) and color (MAG-IMG00251-NC) versions. Both versions use the CLCC-104 package. The image sensor communicates via a CMOS parallel interface with the MAG-CXP00002-NP serializer, located on PCB3. This serializer converts the parallel video data into a serialized stream suitable for transmission over a coaxial cable.

All communication lines pass through PCB2, which also handles signaling between components. In addition to the parallel data interface, a dedicated SPI bus is used for communication between the image sensor and the serializer. This SPI interface is exclusively used for configuration and control of the image sensor by the serializer.

The MAG-CXP00002-NP serializer manages all communication between the image sensor and the CoaXPress (CXP) host, effectively presenting the module as a single logical device to the host controller. Through the 20-MHz uplink channel between the frame grabber and the serializer, the host can communicate with both the serializer and the image sensor. The register maps are designed to appear unified, making the system fully GenICam compliant.

In addition to the vision-related components, the MAG-VIS1000x-N module includes an extra device from Magics' Motion Series: the MAG-DRV00002-NP driver IC. This chip provides eight low-side drivers, each capable of sourcing up to 125 mA, ideal for applications such as LED control. The driver IC is controlled via a second master SPI interface on the serializer, which is also accessible via the CXP uplink, allowing full remote control from the frame grabber.

A 14-pin connector located on the side of the module (see Figure 3 and Figure 4) provides:

- Access to the eight low-side driver outputs.
- A 9V power supply input.
- Ground connections.

The following table lists the connections to these 14 pins:

*Table 3: 14-pin connector connections.*

| **1 (L)** | **2** | **3** | **4** | **5** | **6** | **7** | **8** | **9** | **10** | **11** | **12** | **13** | **14 (R)** |
|---|---|---|---|---|---|---|---|---|---|---|---|---|---|
| GND | CH7 | CH6 | CH5 | CH4 | 9V | 9V | 9V | 9V | CH0 | CH1 | CH2 | CH3 | GND |

For the dimensions of the modules, it is referred to section 0.

Copyright © Magics Technologies NV

### 3.3.2 MAG-VIS1001x-N

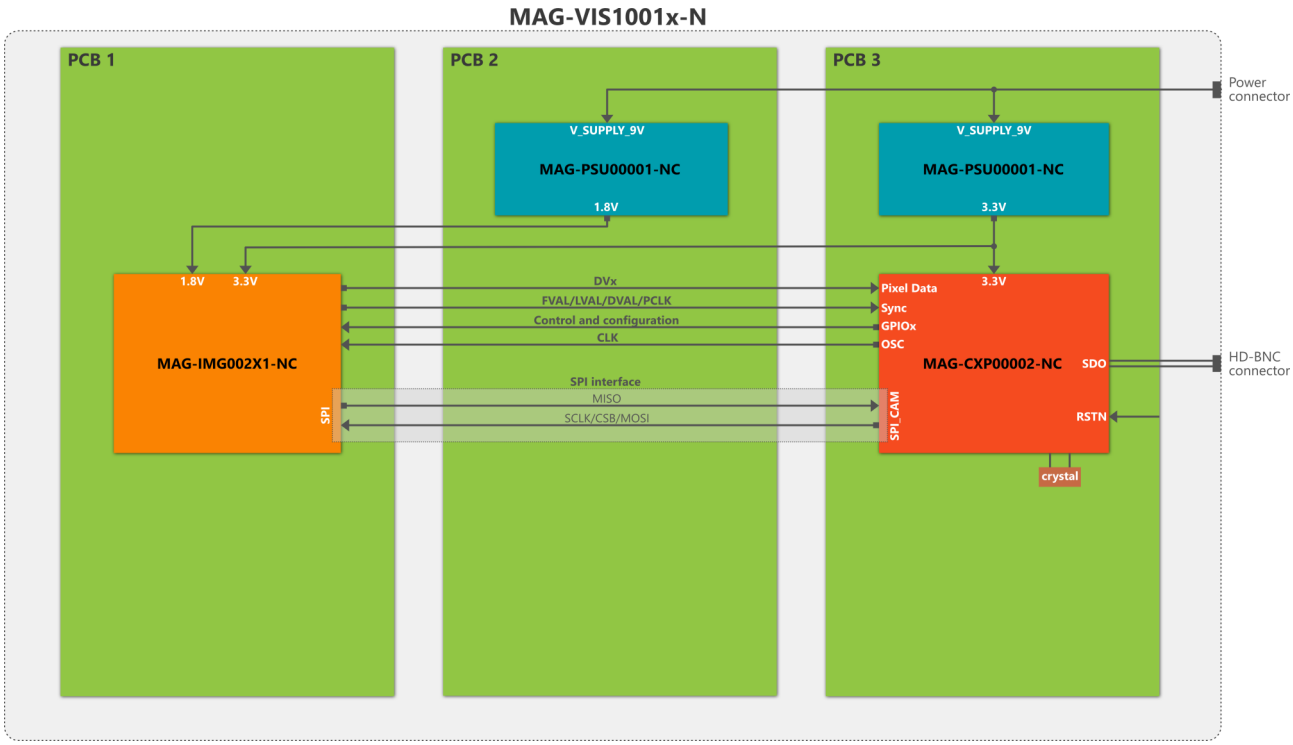


*Figure 6: Block diagram of MAG-VIS1001x-N module.*

Figure 6 shows the block diagram of the MAG-VIS1001x-N module, which is a simplified version of the MAG-VIS1000x-N. In this variant, the MAG-DRV00002-NP driver IC and the 14-pin connector are omitted from PCB2. As a result, the module focuses solely on the core camera chipset functionality.

Copyright © Magics Technologies NV

### 3.3.3 MAG-VIS1002x-N

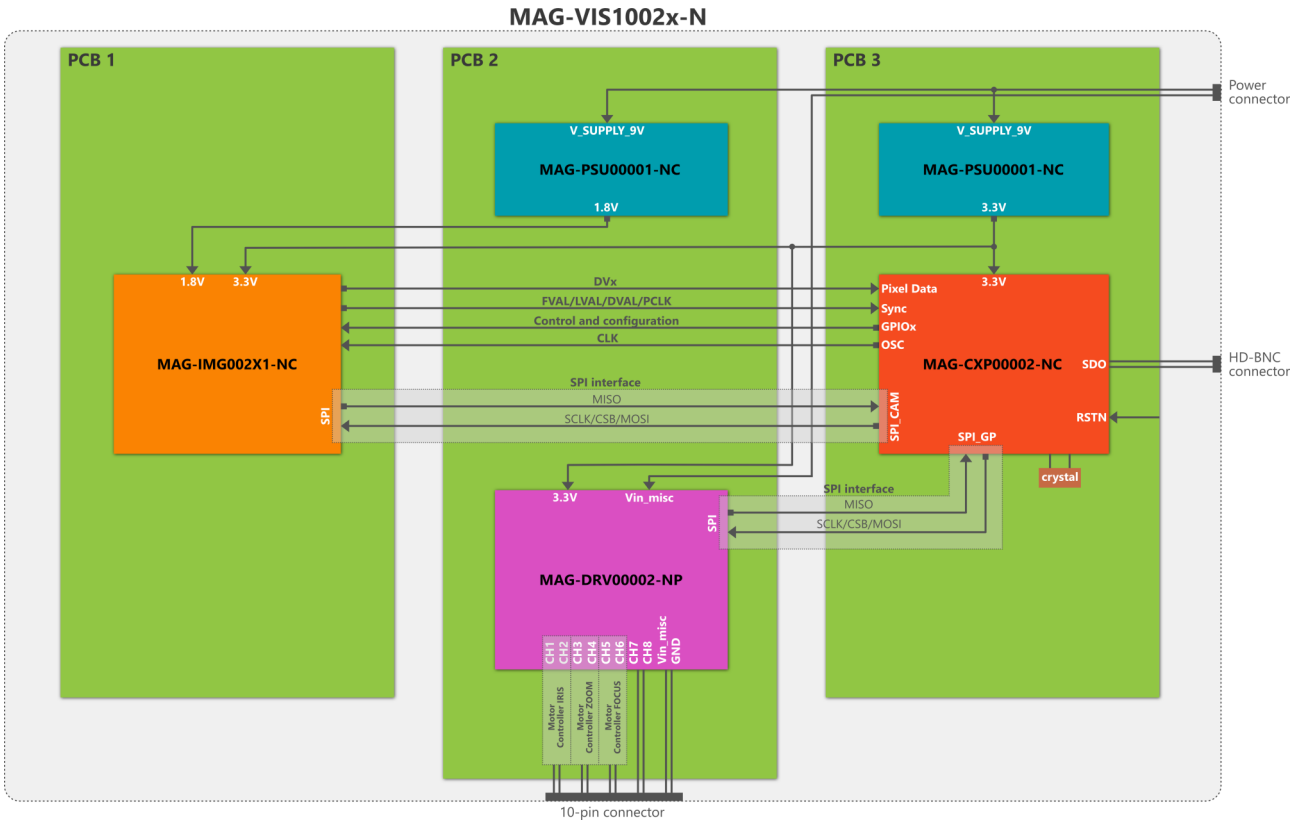


*Figure 7: Block diagram of MAG-VIS1002x-N module.*

The most recent addition to the product line is the MAG-VIS1002x-N module, with its block diagram shown in Figure 7. This variant introduces DC motor control functionality integrated into PCB2, enabling open-loop control of up to three brushed DC motors. This makes the module well-suited for driving motorized lenses with zoom, iris, and focus control.

Copyright © Magics Technologies NV

# 4. Specifications

## 4.1 Absolute maximum ratings

The absolute maximum ratings are the ratings for which the device does not get permanently damaged, but in which the performance is not guaranteed.

| Name | Description | Min | Abs. Max | Unit |
|---|---|---|---|---|
| V_SUPPLY_9V | Power supply to the module | 0 | 12 | V |
| Tj | Junction temperature of silicon | -40 | 85 | °C |
| Tstorage | Storage temperature | 0 | 50 | °C |

## 4.2 Electrical characteristics

| Label | Parameter | Test conditions | Min | Typ | Max | Unit |
|---|---|---|---|---|---|---|
| **I_SUPPLY_9V** | Current consumption on power supply module | See more details on conditions in the table below. | 160 | | 257 | mA |
| **Z_out_AC** | AC output impedance HD-BNC | | | 75 | | Ohm |

**For the IC-related electrical characteristics, it is referred to the corresponding IC datasheets.**

Detailed current consumption on the power supply module, label: I_SUPPLY_9V.

| Test conditions | | | | | Min | Typ | Max | Unit |
|---|---|---|---|---|---|---|---|---|
| Camera Mode | V_SUPPLY_9V | Exposure time [µs] | Temperature | Light condition | | | | |
| FULLHD 10 FPS | 6V | 40 000 | Room | Full dark | | 194 | | mA |
| | | 100 | | Full light | | 197 | | mA |
| | | 40 000 | | Full light | | 209 | | mA |
| FULLHD 25 FPS | | 40 000 | | Full dark | | 236 | | mA |
| | | 100 | | Full light | | 236 | | mA |
| | | 40 000 | | Full light | | 251 | | mA |
| FULLHD 30 FPS | | 40 000 | | Full dark | | 235 | | mA |
| | | 100 | | Full light | | 248 | | mA |
| | | 40 000 | | Full light | | 257 | | mA |
| HD 40 FPS | | 40 000 | | Full dark | | 216 | | mA |
| | | 100 | | Full light | | 225 | | mA |
| | | 40 000 | | Full light | | 231 | | mA |
| VGA 50 FPS | | 40 000 | | Full dark | | 195 | | mA |
| | | 100 | | Full light | | 199 | | mA |
| | | 40 000 | | Full light | | 202 | | mA |
| FULLHD 10 FPS | 9V | 40 000 | | Full dark | | 160 | | mA |
| | | 100 | | Full light | | 162 | | mA |
| | | 40 000 | | Full light | | 164 | | mA |
| FULLHD 25 FPS | | 40 000 | | Full dark | | 180 | | mA |
| | | 100 | | Full light | | 185 | | mA |
| | | 40 000 | | Full light | | 197 | | mA |
| FULLHD 30 FPS | | 40 000 | | Full dark | | 187 | | mA |
| | | 100 | | Full light | | 194 | | mA |
| | | 40 000 | | Full light | | 200 | | mA |
| HD 40 FPS | | 40 000 | | Full dark | | 174 | | mA |
| | | 100 | | Full light | | 175 | | mA |
| | | 40 000 | | Full light | | 184 | | mA |
| VGA 50 FPS | | 40 000 | | Full dark | | 160 | | mA |
| | | 100 | | Full light | | 163 | | mA |
| | | 40 000 | | Full light | | 165 | | mA |

Copyright © Magics Technologies NV

## 4.3 Recommended operating conditions

| Description | Min | Typ | Max | Unit |
|---|---|---|---|---|
| V_SUPPLY_9V | 6 | 9 | 11 | V |
| Coaxial cable impedance | | 75 | | Ohm |
| Coaxial cable attenuation 625 MHz (for high-speed downlink) | | | 21.2 | dB |
| Coaxial cable attenuation @30MHz (for low-speed uplink) | | | 4.74 | dB |
| Operation temperature - environmental | 0 | - | 50 | °C |
| Exposure time – see below in section 4.3.1 | 0 | | 5 | ms |

### 4.3.1 Recommended operating conditions in radiation environment

The primary performance parameter affected by irradiation is dark current. As radiation dose accumulates, dark current increases, which can cause the image to saturate more quickly during long exposure times. However, in terms of functionality, the imager remains fully operational.

Due to on-chip parameter drifts induced by radiation, some biasing parameters may require adjustment over the sensor's lifetime. This re-tuning is straightforward and involves uploading updated register settings via the CoaXPress (CXP) link—no manual intervention on the camera hardware is necessary. Note that, regardless of irradiation, the camera already requires a register map upload at boot to apply the correct configuration.

Additionally, dark current also increases with temperature, which is a well-known behaviour of all CMOS image sensors. Importantly, the sensor’s self-heating is influenced by the radiation dose rate—a higher dose rate leads to a greater temperature rise, further amplifying dark current.

**Recommended Operating Guidelines for High-Dose Environments (>1 kGy/hr)**

To ensure optimal sensor performance under high radiation conditions:

- Minimize exposure time (preferably below 5 ms):
  - Longer exposures result in more integrated dark current.
  - Exposure time can be dynamically adjusted via CXP uplink commands.
- Maintain low sensor temperature:
  - Implement active cooling solutions to prevent self-heating.
  - With effective thermal management, strict exposure time limitations may be relaxed.

**Lower Dose Rate Conditions (<0.5 kGy/hr)**

At lower dose rates, sensor self-heating is significantly reduced. As a result, dark current remains relatively stable, and the impact on image quality is minimal.s

Copyright © Magics Technologies NV

# 5. Mechanical dimensions and interfaces

## 5.1 Dimensions

Below an overview of the mechanical dimensions of the MAG-VIS100xx-N is given. Note that the PCB X-Y dimensions are exactly the same for all the module variants. The depth of the module, however, depends on the variant.

The lens mounting position is always 13.63 mm from the top PCB.

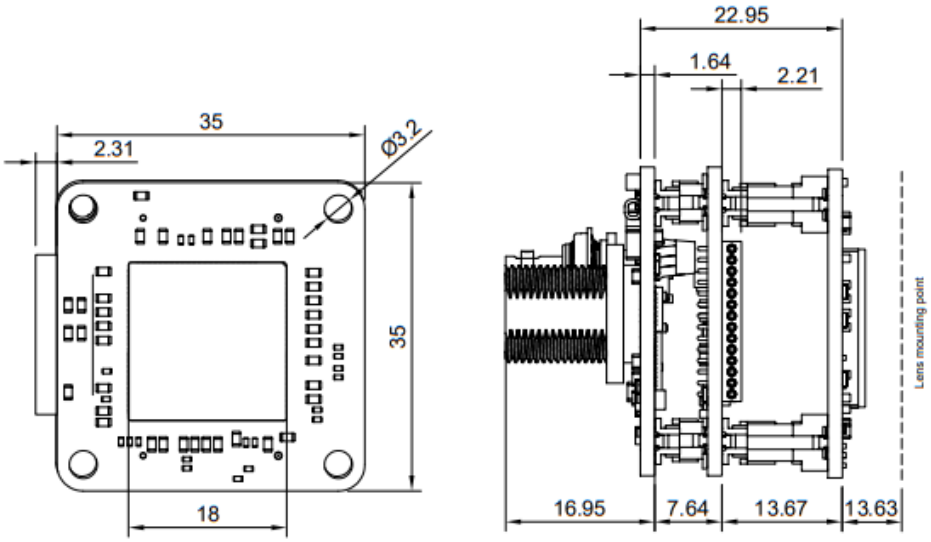


*Figure 8: MAG-VIS1000x-N module PCB and stack-up dimensions [mm].*

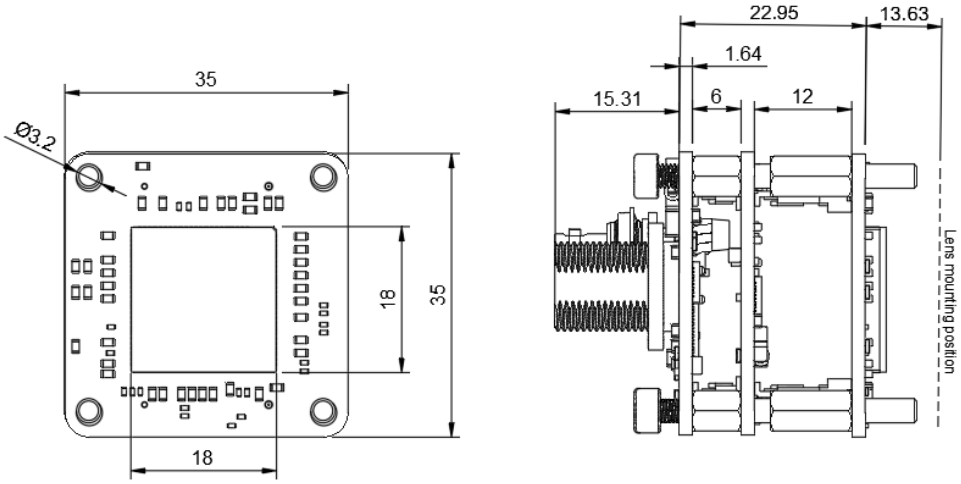


*Figure 9: MAG-VIS1001x-N module PCB and stack-up dimensions [mm].*

Copyright © Magics Technologies NV

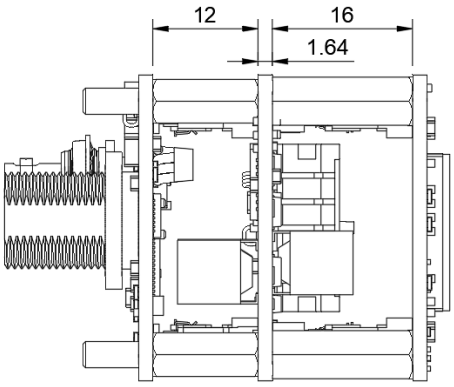


*Figure 10: MAG-VIS1002x-N module PCB and stack-up dimensions [mm].*

Copyright © Magics Technologies NV

## 5.2 Connectors

In this section more details are given on the used connectors.

### 5.2.1 14-pin connector

<table>
<tr><td>Connector name</td><td>14-pin connector</td></tr>
<tr><td>Description</td><td>This connector gives access to the low-side driver pins of the driver IC MAG-DRV00002-NP. In addition to the access to the low-side drivers, it also gives access to the 9V power supply and corresponding ground (see section 3.3.1).</td></tr>
<tr><td>PCB</td><td>Integrated on MAG-VIS40011-N<br> </td></tr>
<tr><td>Manufacturer part number</td><td>851-43-014-20-001000</td></tr>
<tr><td>Manufacturer description</td><td>14 position receptacle connector, pitch: 0,050” (1,27mm)</td></tr>
<tr><td>Pinout</td><td>
<table>
<tr><th>PIN</th><th>Description</th></tr>
<tr><td>1</td><td>GND</td></tr>
<tr><td>2</td><td>CH7</td></tr>
<tr><td>3</td><td>CH6</td></tr>
<tr><td>4</td><td>CH5</td></tr>
<tr><td>5</td><td>CH4</td></tr>
<tr><td>6</td><td>V_SUPPLY_9V</td></tr>
<tr><td>7</td><td>V_SUPPLY_9V</td></tr>
<tr><td>8</td><td>V_SUPPLY_9V</td></tr>
<tr><td>9</td><td>V_SUPPLY_9V</td></tr>
<tr><td>10</td><td>CH0</td></tr>
<tr><td>11</td><td>CH1</td></tr>
<tr><td>12</td><td>CH2</td></tr>
<tr><td>13</td><td>CH3</td></tr>
<tr><td>14</td><td>GND</td></tr>
</table>
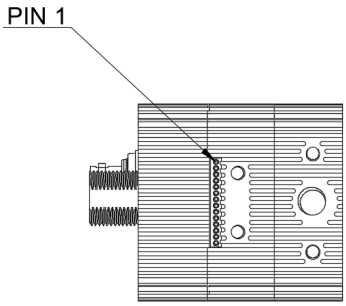

</td></tr>
</table>

### 5.2.2 10-pin connector

| | |
|---|---|
| **Connector name** | 10-pin connector |
| **Description** | This connector serves as the interface for the lens's iris, zoom, and focus motors. This connector also provides access to 2 low-side driver pins of the MAG-DRV00002-NP IC, along with power and ground connections. |
| **PCB** | Integrated on **MAG-VIS40021-N** |
| **Manufacturer part number** | 43045-1006 |
| **Manufacturer description** | 10 position pin header, pitch: 3mm, 2 rows |
| **Pinout** | |

| PIN | Description |
|---|---|
| 1 | IRIS A(CH1) |
| 2 | IRIS B(CH2) |
| 3 | ZOOM A(CH3) |
| 4 | ZOOM B(CH4) |
| 5 | FOCUS A(CH5) |
| 6 | FOCUS B(CH6) |
| 7 | CH7 |
| 8 | CH8 |
| 9 | Vin_misc |
| 10 | GND |

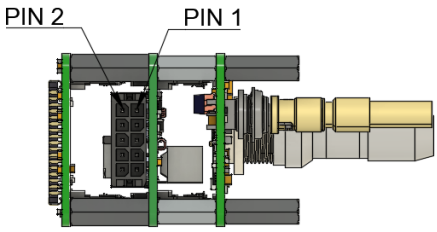


### 5.2.3 Power connector

| | |
|---|---|
| **Connector name** | Power connector |
| **Description** | The main power connector. |
| **PCB** | Integrated on **MAG-VIS40031-N** |
| **Manufacturer part number** | TS2P3F20-BP |
| **Manufacturer description** | 3 position circular connector receptacle |

Copyright © Magics Technologies NV

| | |
|---|---|
| **Pinout** | 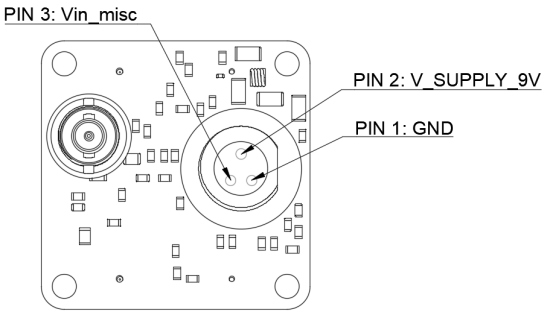 |

### 5.2.4 HD-BNC connector

| | |
|---|---|
| **Connector name** | HD-BNC |
| **Description** | The CoaXPress interface connector. |
| **PCB** | Integrated on **MAG-VIS40031-N**<br> |
| **Manufacturer part number** | 034-1139-12G |
| **Manufacturer description** | 75 Ohm BNC receptacle connector. |
| **Pinout** | 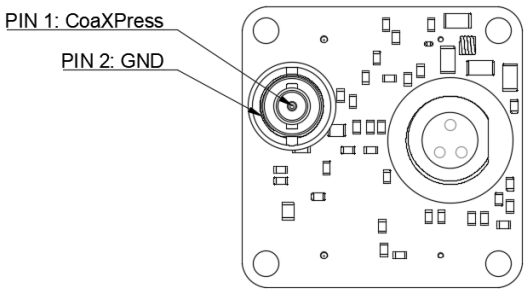 |

Copyright © Magics Technologies NV

### 5.2.5 PCB stack-up connector

| | |
|---|---|
| **Connector name** | |
| **Description** | These male-female connectors are used to interconnect the different PCBs in the stackup. |
| **PCB** | Integrated on **all module PCBs**<br>*First PCB*<br> <br>MAG-VIS40003-N: mono<br>MAG-VIS40004-N: color<br>*Second PCB*<br> <br>MAG-VIS40011-N:<br>w/ MAG-DRV<br>MAG-VIS40012-N:<br>w/o MAG-DRV<br> <br>MAG-VIS40021-N<br>*Third PCB*<br> 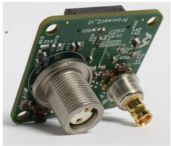 <br>MAG-VIS40031-N |
| **Manufacturer part number** | See Figure 11. |
| **Manufacturer description** | Board to board connectors. |
| **Pinout** | A list of the different signals which run through the entire PCB stack-up is listed in Figure 11. |

Copyright © Magics Technologies NV

# MAG-VIS100xx-N- MAG-VIS Vision Modules

**PCB 1 IMAGER** — SIDE TO PCB 2 — MPN: 52901-0474

| | P1 | | | | P2 | | |
|---|---|---|---|---|---|---|---|
| DV_XO | 1 | 2 | DV_X6 | TV0 | 1 | 2 | VDDD_1V8 |
| DV_X1 | 3 | 4 | DV_X7 | TV1 | 3 | 4 | GND |
| DV_X2 | 5 | 6 | DV_X8 | TV2 | 5 | 6 | VDDIO_3V3 |
| DV_X3 | 7 | 8 | DV_X9 | TV3 | 7 | 8 | GND |
| DV_X4 | 9 | 10 | DV_X10 | NC | 9 | 10 | VDDD_1V8 |
| DV_X5 | 11 | 12 | DV_X11 | NC | 11 | 12 | VDDD_1V8 |
| GND | 13 | 14 | DV_CLK | NC | 13 | 14 | VDDD_1V8 |
| NC | 15 | 16 | DV_DVAL | NC | 15 | 16 | GND |
| GND | 17 | 18 | DV_LVAL | TV8 | 17 | 18 | TB0 |
| NC | 19 | 20 | DV_FVAL | TV9 | 19 | 20 | TB1 |
| NC | 21 | 22 | GND | TV10 | 21 | 22 | TB2 |
| NC | 23 | 24 | TRIGGER | VREF_1V2 | 23 | 24 | TB3 |
| NC | 25 | 26 | GND | VDDA_3V3 | 25 | 26 | GND |
| NC | 27 | 28 | CLK | GND | 27 | 28 | NC |
| NC | 29 | 30 | GND | VDDPLL_3V3 | 29 | 30 | NC |
| NC | 31 | 32 | IMG_SPI_CS_BAR | GND | 31 | 32 | GND |
| NC | 33 | 34 | IMG_SPI_SCLK | VD_RST_3V3 | 33 | 34 | NC |
| NC | 35 | 36 | IMG_SPI_MOSI | GND | 35 | 36 | NC |
| NC | 37 | 38 | IMG_SPI_MISO | NC | 37 | 38 | NC |
| NC | 39 | 40 | RST | NC | 39 | 40 | NC |

**PCB 2 POWER** — SIDE TO PCB 1 — MPN: 52091-0474

| | P1 | | | | P2 | | |
|---|---|---|---|---|---|---|---|
| DV_XO | 1 | 2 | DV_X6 | TV0 | 1 | 2 | FRONT_1V8 |
| DV_X1 | 3 | 4 | DV_X7 | TV1 | 3 | 4 | GND |
| DV_X2 | 5 | 6 | DV_X8 | TV2 | 5 | 6 | VDDIO_3V3 |
| DV_X3 | 7 | 8 | DV_X9 | TV3 | 7 | 8 | GND |
| DV_X4 | 9 | 10 | DV_X10 | TV4 | 9 | 10 | FRONT_1V8 |
| DV_X5 | 11 | 12 | DV_X11 | TV5 | 11 | 12 | FRONT_1V8 |
| GND | 13 | 14 | DV_CLK | TV6 | 13 | 14 | FRONT_1V8 |
| FRONT_1V25 | 15 | 16 | DV_DVAL | TV7 | 15 | 16 | GND |
| GND | 17 | 18 | DV_LVAL | TV8 | 17 | 18 | TB0 |
| CTR_SPI_SCLK | 19 | 20 | DV_FVAL | TV9 | 19 | 20 | TB1 |
| CTR_SPI_MOSI | 21 | 22 | GND | TV10 | 21 | 22 | TB2 |
| CTR_SPI_MISO | 23 | 24 | TRIGGER | VDDBG_1V2 | 23 | 24 | TB3 |
| CTR_GPIO7 | 25 | 26 | GND | VDD_3V3 | 25 | 26 | GND |
| CTR_GPIO6 | 27 | 28 | CLK | GND | 27 | 28 | V_SUPPLY_9V |
| CTR_GPIO5 | 29 | 30 | GND | VDDPIX_3V3 | 29 | 30 | V_SUPPLY_9V |
| CTR_GPIO4 | 31 | 32 | IMG_SPI_CS_BAR | GND | 31 | 32 | GND |
| CTR_GPIO3 | 33 | 34 | IMG_SPI_SCLK | VDDD_3V3 | 33 | 34 | Vin_misc |
| CTR_GPIO2 | 35 | 36 | IMG_SPI_MOSI | GND | 35 | 36 | Vin_misc |
| CTR_GPIO1 | 37 | 38 | IMG_SPI_MISO | MEGA_RTEMP_L | 37 | 38 | Vin_misc |
| CTR_GPIO0 | 39 | 40 | RST | MEGA_RTEMP_H | 39 | 40 | Vin_misc |

SIDE TO PCB 3 — MPN: 52885-0474

| | P4 | | | | P5 | | |
|---|---|---|---|---|---|---|---|
| DV_XO | 1 | 2 | DV_X6 | TV0 | 1 | 2 | BACK_1V8 |
| DV_X1 | 3 | 4 | DV_X7 | TV1 | 3 | 4 | GND |
| DV_X2 | 5 | 6 | DV_X8 | TV2 | 5 | 6 | VDDIO_3V3 |
| DV_X3 | 7 | 8 | DV_X9 | TV3 | 7 | 8 | GND |
| DV_X4 | 9 | 10 | DV_X10 | TV4 | 9 | 10 | BACK_1V8 |
| DV_X5 | 11 | 12 | DV_X11 | TV5 | 11 | 12 | BACK_1V8 |
| GND | 13 | 14 | DV_CLK | TV6 | 13 | 14 | BACK_1V8 |
| BACK_1V25 | 15 | 16 | DV_DVAL | TV7 | 15 | 16 | GND |
| GND | 17 | 18 | DV_LVAL | TV8 | 17 | 18 | TB0 |
| CTR_SPI_SCLK | 19 | 20 | DV_FVAL | TV9 | 19 | 20 | TB1 |
| CTR_SPI_MOSI | 21 | 22 | GND | TV10 | 21 | 22 | TB2 |
| CTR_SPI_MISO | 23 | 24 | TRIGGER | VDDBG_1V2 | 23 | 24 | TB3 |
| CTR_GPIO7 | 25 | 26 | GND | VDD_3V3 | 25 | 26 | GND |
| CTR_GPIO6 | 27 | 28 | CLK | GND | 27 | 28 | V_SUPPLY_9V |
| CTR_GPIO5 | 29 | 30 | GND | VDDPIX_3V3 | 29 | 30 | V_SUPPLY_9V |
| CTR_GPIO4 | 31 | 32 | IMG_SPI_CS_BAR | GND | 31 | 32 | GND |
| CTR_GPIO3 | 33 | 34 | IMG_SPI_SCLK | VDDD_3V3 | 33 | 34 | Vin_misc |
| CTR_GPIO2 | 35 | 36 | IMG_SPI_MOSI | GND | 35 | 36 | Vin_misc |
| CTR_GPIO1 | 37 | 38 | IMG_SPI_MISO | MEGA_RTEMP_L | 37 | 38 | Vin_misc |
| CTR_GPIO0 | 39 | 40 | RST | MEGA_RTEMP_H | 39 | 40 | Vin_misc |

**PCB 3 SERIALIZER** — SIDE TO PCB 2 — MPN: 52091-0474

| | P1 | | | | P2 | | |
|---|---|---|---|---|---|---|---|
| DV_XO | 1 | 2 | DV_X6 | TV0 | 1 | 2 | VDDIO_1V8 |
| DV_X1 | 3 | 4 | DV_X7 | TV1 | 3 | 4 | GND |
| DV_X2 | 5 | 6 | DV_X8 | TV2 | 5 | 6 | VDDCAM_3V3 |
| DV_X3 | 7 | 8 | DV_X9 | TV3 | 7 | 8 | GND_3V3 |
| DV_X4 | 9 | 10 | DV_X10 | TV4 | 9 | 10 | VDDIO_1V8 |
| DV_X5 | 11 | 12 | DV_X11 | TV5 | 11 | 12 | VDDIO_1V8 |
| GND | 13 | 14 | DV_CLK | TV6 | 13 | 14 | VDDIO_1V8 |
| MEGA_1V25 | 15 | 16 | DV_DVAL | TV7 | 15 | 16 | GND |
| GND | 17 | 18 | DV_LVAL | TV8 | 17 | 18 | TB0 |
| CTR_SPI_SCLK | 19 | 20 | DV_FVAL | TV9 | 19 | 20 | TB1 |
| CTR_SPI_MOSI | 21 | 22 | GND | TV10 | 21 | 22 | TB2 |
| CTR_SPI_MISO | 23 | 24 | TRIGGER | VREF_CAM | 23 | 24 | TB3 |
| CTR_GPIO7 | 25 | 26 | GND | VDDA_3V3 | 25 | 26 | GND |
| CTR_GPIO6 | 27 | 28 | CLK | GND | 27 | 28 | V_SUPPLY_9V |
| CTR_GPIO5 | 29 | 30 | GND | VDDPLL_3V3 | 29 | 30 | V_SUPPLY_9V |
| CTR_GPIO4 | 31 | 32 | IMG_SPI_CS_BAR | GND | 31 | 32 | GND |
| CTR_GPIO3 | 33 | 34 | IMG_SPI_SCLK | VDDD_3V3 | 33 | 34 | Vin_misc |
| CTR_GPIO2 | 35 | 36 | IMG_SPI_MOSI | GND | 35 | 36 | Vin_misc |
| CTR_GPIO1 | 37 | 38 | IMG_SPI_MISO | NC | 37 | 38 | Vin_misc |
| CTR_GPIO0 | 39 | 40 | RST | NC | 39 | 40 | Vin_misc |

*Figure 11: Connector stack-up PIN interface.*

Copyright © Magics Technologies NV

## 6. Operating the MAG-VIS modules

More information on operating the MAG-VIS modules is available when the modules are purchased, in the form of a user manual. In case any additional questions arise, it is advised to contact *sales@magics.tech*.

The MAG-VIS module comes with pre-defined DCF files (basically camera configuration files), which configure the camera for operation in different modes:

- VGA5: VGA resolution at 5 frames per second.
- VGA50: VGA resolution at 50 frames per second.
- VGA100: VGA resolution at 100 frames per second.
- HD5: HD resolution at 5 frames per second.
- HD40: HD resolution at 40 frames per second.
- FHD10: FHD resolution at 10 frames per second.
- FHD25: FHD resolution at 25 frames per second.
- FHD30: FHD resolution at 30 frames per second.

More information on loading the DCF files can be found in the user manual.

Also, Magics has an application note available on the selection of the CXP frame grabber. Magics will be happy to support the customer with it.

## 7. Product maturity levels

Magics uses the following product maturity levels:

| Maturity | Description |
|---|---|
| **PROTO** | Functionality tested in typical voltage and temperature; no commitment on specification performance. Package may differ depending on availabilities. |
| **EM** | Characterization performed in typical voltage and temperature conditions. No commitment on specification performance. |
| **EQM** | Characterization performed over full voltage and temperature range. |
| **PROD** | Qualified parts, no screening for space use |
| **FM** | Qualified parts, screened for space use |

## 8. Product versions

| Product code | Maturity level availability | Description |
|---|---|---|
| MAG-VIS10003-N | **EM, EQM** | MAG-VIS module as in MAG-CAM10003-N – mono imager |
| MAG-VIS10004-N | **EM, EQM** | MAG-VIS module as in MAG-CAM10004-N – color imager |
| MAG-VIS10013-N | **EM, EQM, PROD** | MAG-VIS module without MAG-DRV00002-NP and 14-pin connector on PCB2 – mono imager |
| MAG-VIS10014-N | **EM, EQM, PROD** | MAG-VIS module without MAG-DRV00002-NP and 14-pin connector on PCB2 – color imager |
| MAG-VIS10023-N | **EM** | MAG-VIS module with motorized lens control capability – mono imager |
| MAG-VIS10024-N | **EM** | MAG-VIS module with motorized lens control capability – color imager |
| MAG-VIS40003-N | **EM, EQM, PROD** | PCB with MAG-IMG00241-N (mono) imager and passive components for biasing and filtering. |
| MAG-VIS40004-N | **EM, EQM, PROD** | PCB with MAG-IMG00241-N (mono) imager and passive components for biasing and filtering. |
| MAG-VIS40011-N | **EM, EQM** | PCB with MAG-PSU00001-NP to generate the 1.8V for the imager, with a MAG-DRV00002-NP integrated, whose outputs are accessible through a 14-pin connector at the side. |
| MAG-VIS40012-N | **EM, EQM, PROD** | PCB with a MAG-PSU00001-NP to generate the 1.8V for the imager. |
| MAG-VIS40021-N | **EM** | PCB with a MAG-PSU00001-NP to generate the 1.8V for the imager. Additionally, MAG-DRV00002-NP and relays are integrated to function as a DC motor controlled for a motorized lens. |
| MAG-VIS40031-N | **EM, EQM, PROD** | PCB with a MAG-PSU00001-NP to generate the 3.3V for MAG-IMG002x1-NC, MAG-DRV00002-NP and MAG-CXP00002-NP, and one MAG-CXP00002-NP for video communication. |

The datasheets of the respective IC products can be received at request. Please contact *sales@magics.tech*.

Copyright © Magics Technologies NV

## 9. Revision information

| Version number | Date | Change description |
|---|---|---|
| **2025/10-rev1.0** | 2025-10-08 | Initial version – first release. |
| **2025/11-rev1.1** | 2025-11-14 | - added new section on product maturity levels<br>- updated disclaimer |
| **2026/04-rev1.2** | 2026-04-24 | - removed watermark.<br>- added PROD model availability for some versions. |

## Disclaimer

Magics Technologies' products are sold by description only. Magics Technologies reserves the right to make changes in circuit design, software and/or specifications at any time without notice for products in PROTO or EM maturity status. Accordingly, the reader is cautioned to verify that datasheets are current before placing orders. Information furnished by Magics Technologies is believed to be accurate and reliable. However, no responsibility is assumed by Magics Technologies for its use; nor for any infringements of patents or other rights of third parties which may result from its use. No license is granted by implication or otherwise under any patent or patent rights of Magics Technologies.

This development is partially co-funded in collaboration with Fusion For Energy.

**For information regarding Magics Technologies and its products, see www.magics.tech**

Copyright © Magics Technologies NV