MAG-PSU00001-NP– Radiation tolerant 10W Synchronous Step-Down Buck DC/DC converter

Figure 1: 32-lead plastic QFN (5x5 mm) (component is available as die, other package formats can be made available).

1. Key performance parameters

- Core performance parameters
  - Input voltage range 5 to 11V
  - Continuous 4A load capability (with active cooling) and 1A with passive cooling
  - Integrated Power N-channel MOSFETs
  - Adjustable switching frequency 1-3MHz
  - Synchronous Buck topology with continuous mode operation
  - High bandwidth feedback loop (150KHz) for good transient performance
- Additional features
  - Over-Current protection
  - Under-voltage lockup
  - Over-Temperature protection
  - Power Good output
  - Enable Input
  - Selectable Power Transistor size (5/5th or 2/5th) for improved efficiency at small loads (<600mA)
- Supplies and temperature
  - 5 - 11V input
  - -40°C to 125°C operating temperature*

    * Note: over-temperature protection kicks in at a lower temperature at ~100 °C.
- Radiation hardness:
  - TID: >1 MGy (Si)
  - SEE: continuous operation during exposure to heavy ions of LET up to 64MeVcm^{2}mg^{-1} with short transients below 20% of the nominal Vout (no destructive event, no output power interruption).
- Package Info: QFN-32 5mm x 5mm

2. Applications

Point Of Load in distributed power systems where either radiation tolerance or magnetic field tolerance, or both, are required.

3. Markets

Nuclear, Space, High-energy particle accelerators, Medical accelerators.

4. Description

MAG-PSU00001-NP is a single-phase synchronous buck converter developed to provide an efficient solution for the distribution of power in High Energy Physics experiments. As such, it has been designed for flawless functionality in a harsh radiation and magnetic field environment. The selection of an appropriate CMOS technology, coupled to the systematic use of Radiation Hardness By Design (RHBD) techniques, makes the converter capable of continuous operation up to more than 100 Mrad/1MGy (Si) total ionizing dose. Single Event Effects resilience has been built-in, and the circuit has been tested free of destructive SEEs and of output power interruptions during irradiations with heavy ions up to an equivalent LET of 64MeVcm^{2}mg^{-1} (at 60° incidence; no data available for higher LETs). MAG-PSU00001-NP has been designed for operation in a strong magnetic field in excess of 40,000 Gauss, and has been optimized for air core inductors of 400-500nH: to be compatible with these small coil values, its switching operation is in the 1-3MHz range (1.5-2MHz for maximum efficiency).

The monolithic construction of MAG-PSU00001-NP, with the integration of the power train and the bootstrap diode with the controller, makes the converter a space-efficient solution to provide POL regulation from a 5-11V supply rail. Its protection features include Over-Current, Over-Temperature and Input Under-Voltage to improve system-level security in the event of fault conditions. The chip temperature increase in the application can be monitored via a dedicated analog signal (PTAT).

CONFIDENTIAL

Copyright © Magics Technologies NV / Confidential information

MAG-PSU00001-NP– Radiation tolerant 10W Synchronous Step-Down Buck DC/DC converter

5. Typical application

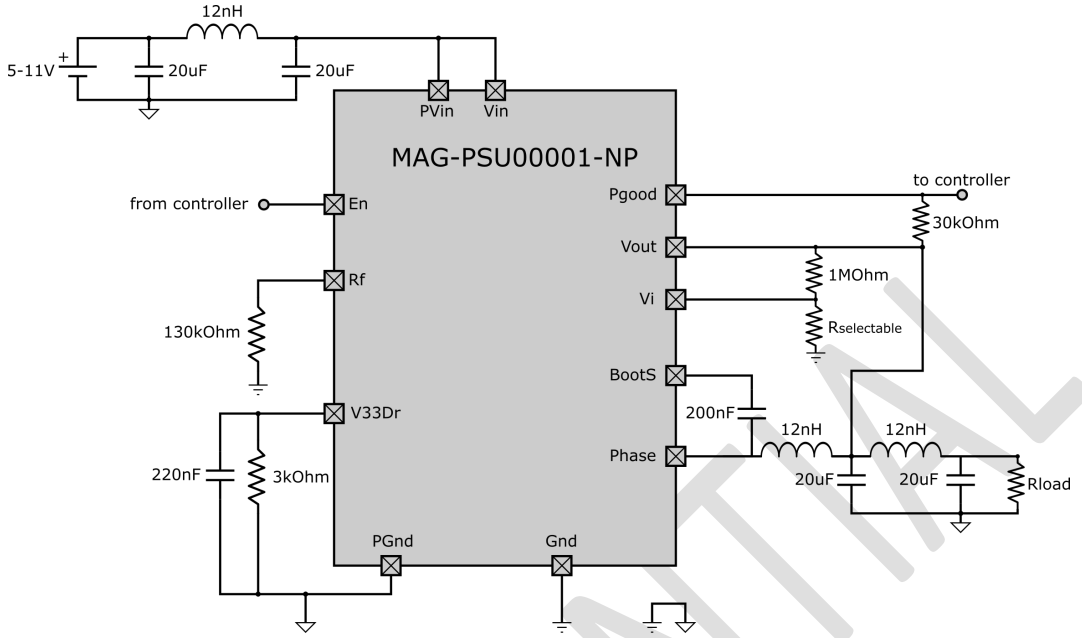

Figure 2: Typical application diagram.

6. Absolute Maximum Ratings

Power Input Voltage PVin..... -0.3V to +12.0V
Control Input Voltage Vin ..... -0.3V to +12.0V
Bootstrap Voltage BootS ..... -0.3 to PVin+3.6V
Phase Voltage .....0.3 V to Vin (DC), -2 to 13.5 V (AC, 10ns)
Phase to BootS Voltage..... -0.3V to +3.6V
Driver Voltage, V33Dr ..... -0.3V to +3.6V
Feedback input Voltage of the E/A Vi..... -0.3V to +3.6V
Frequency selector Rf ..... -0.3V to +3.6V
Power transistor size toggle HalfSw .....-0.3V to +3.6V
Reference voltage toggle Ref1V2 .....-0.3V to +3.6V
Converter Enable En .....-0.3V to +3.6V
Power good PGood.....-0.3V to +6.0V
Output Voltage Vout.....-0.3V to +6.0V
Current in PGood pin (when PGood is negated) 50uA
Imax in En pin.....100uA

7. Pin Configuration

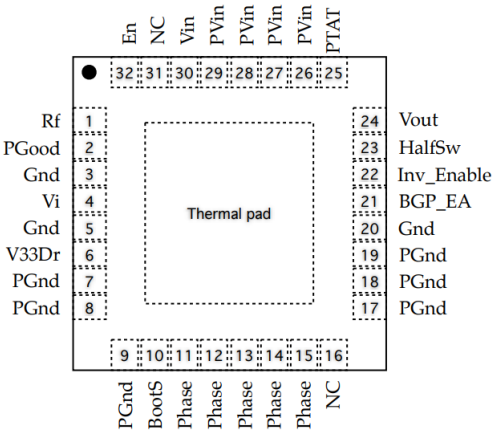

Figure 3: Top view - 32-lead plastic QFN (5x5 mm)
Thermal pad must be soldered to PCB PGnd.

CONFIDENTIAL

MAG-PSU00001-NP– Radiation tolerant 10W Synchronous Step-Down Buck DC/DC converter

8. Pin Function

Rf (Pin 1): Frequency Selector. A resistor placed between this Pin and the board GND determines the switching frequency of the converter as illustrated in the following table. The recommended range for best performance is 1.5-2 MHz.

Resistance (ohm)	Frequency (MHz)
270K	1.03
200K	1.35
180K	1.48
160K	1.65
130K	1.99
100K	2.51
82K	2.98

PGood (Pin2): Power Good flag. This output pin comes from an open-drain NMOS transistor that is conductive when the converter is not regulating the output voltage. It requires a pull-up resistor to the appropriate user-required voltage. It is recommended to obtain this voltage from Vout, either with a simple pull-up or with a voltage divider. The value of the pull-up resistor determines the current in the open-drain NMOS, which should be limited below 50uA. PGood is asserted (NMOS off) during normal operation, while it is negated (NMOS on) in disable mode, during restart, in case of under-voltage or over-temperature, and when the output voltage is outside a regulation window approximately ±6.5% around the selected Vout.

Gnd (Pin3, 5, 20): Ground of the control electronics of the converter. It must be connected to the PCB ground plane possibly in a location remote to the power current loop in the same plane.

Vi (Pin 4): Input voltage of the Error Amplifier. The compensation network is integrated on-chip and ensures a bandwidth of about 150kHz, but the DC regulation voltage Vout is selected by a voltage divider between Vout and gnd with two resitors (Off-chip components,). Vi is connected between the 2 resistors and the resulting voltage is compared to the internal reference voltage (about 0.6V). The resistor between Vout and Vi must have a value of 1MΩ, while the one between Vi and gnd is selectable (no resistor makes Vout = Vref). This is shown in Figure 4.

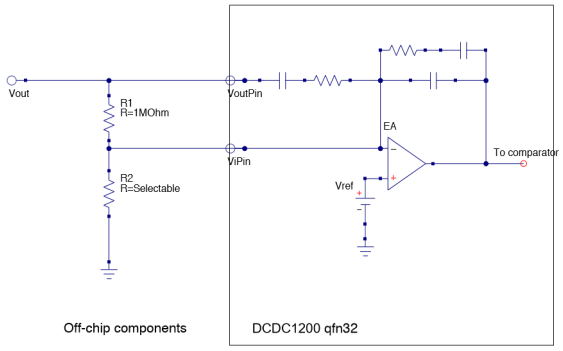

Figure 4: Configuring the output voltage.

V33Dr (Pin6): Voltage supply for the drivers of the power transistors. Although the regulator providing the 3.3V to the drivers is integrated, the large gate capacitance of the power switches requires a hefty charge storage element capable of providing quickly all the required transient current. This cannot be achieved by on-chip capacitor, and an external capacitor of 220nF, positioned as close to the V33Dr pin as possible and directly connected to the PGnd (on the top PCB layer), is required.

PGnd (Pin 7, 8, 9, 17, 18, 19): Power Ground. This is the gnd of the power train and drivers, where large current transients are flowing. All PGnd pins must be connected to a large power plane under the qfn32, itself soldered to the Thermal Pad of the package, and connected to the PCB gnd plane by a large number of vias.

BootS (Pin 10): BootStrap capacitor voltage. MAG-PSU00001-NP uses 2 NMOS transistors in the power train, and the High Side (HS) switch requires a BootStrap circuit, which is embedded, for correct gate driving (the gate has to be connected to Phase for turnoff and to Phase+3.3V for turn-on). Given the large size of the HS power switch, an off-chip capacitor is required to provide the transient current to the HS drivers during switching. This capacitor, of220nF, must be positioned between Phase and BootS pins, as close as possible to the qfn32 package.

Bgp_EA (Pin 21): The reference voltage to the Error Amplifier is buffered and made observable at this pin exclusively for test purposes. It is recommended to leave this pin floating.

Inv_Enable (Pin 22): Toggle of the polarity of the Enable pin. If this pin is connected to gnd, the polarity of the Enable pin is switched. It is recommended to leave this pin floating.

HalfSW (Pin 23): Toggle controlling the size of the power train transistors. If this pin is connected to gnd, only 2/5th of the integrated power switches are used,

CONFIDENTIAL

decreasing the power required to charge their large gate capacitance (increasing however their on-resistance). In this configuration, efficiency increases for light loads – below about 600mA. For larger loads, leave the pin floating for higher efficiency and reliability.

Vout (Pin 24): Regulated output voltage. Note: This pin must be connect though the resistive divider to Vi (Pin 4) to come to the desired output voltage (See) (This is clarified in the description of Pin 4 (Vi).)

PTAT (Pin 25): Proportional To Absolute Temperature provides and analog voltage whose variation with the chip junction T is linear with a slope of about 8.5 mV/°C. See section 12.13 for a detailed explanation.

PVin (Pin 26, 27, 28, 29): Power Input Voltage. Input voltage of the power switches and drivers, where large current transients are flowing. Large input capacitances must be connected between this pin and PGnd as close to the package as possible (see board design recommendations in the application note).

Vin (Pin 31): Input Voltage for the control electronics of the converter. It is recommended to connect it to PVin close to the chip.

En (Pin 32): Enable input. MAG-PSU00001-NP is normally disabled and requires a voltage above 850mV applied to this pin to be enabled and start operation. This voltage has been chosen to make the pin compatible with control from almost any CMOS logic controller between 0.9 and 3.3V. The polarity of the pin can be inverted by connecting Inv_Enable (Pin22) to gnd, in which case MAG-PSU00001-NP is enabled for applied voltages below 850mV. Note that an embedded 500 kΩ resistor pulls the voltage of the En pin to gnd. A maximum current of 100uA is allowed into the pin.

9. Recommended Operating Conditions

Table 1: Recommended operating conditions.

Description	Min	Max	Unit
Input voltage - PVin, Vin	5	11	V
Output voltage - Vout	0.9	5	V
Conversion ratio - Vout/Vin	2	10	
Output current – Iout (supposes efficient cooling of PCB ground plane)	0	4	A
Output power – Pout (supposes efficient cooling of PCB ground plane)	0	10	W
Switching frequency	1.5	2	MHz
Cooling plate temperature (temperature of the PCB ground plane that has to be attached to a cooling plate)	-40	30	°C
Output current above which HalfSw should be left floating for higher efficiency and reliability	600	800	mA
Inductor value	400	500	nH
Enable voltage		3.3	V
Power Good voltage		3.3	V

CONFIDENTIAL

MAG-PSU00001-NP– Radiation tolerant 10W Synchronous Step-Down Buck DC/DC converter

10. Electrical Specifications

Table 2: Electrical specifications.

SYMBOL	PARAMETER	TEST CONDITIONS	MIN	TYP	MAX	UNITS
Power						
PVin, Vin	Input voltage supply range	Converter operational	5	-	11	V
Iin	Input current for control electronics (via Vin pin)	En pin low, converter disabled	-	2	-	mA
Iout ([1])	Output current	f=1.8MHz, L=460nH, package thermal pad soldered to PCB, PCB in air	-	-	1	A
		f=1.8MHz, L=460nH, good thermal contact with cooling plate at 18°C	-	-	4	A
Pout ([1])	Output power	f=1.8MHz, L=460nH, package thermal pad soldered to PCB, PCB in air	-	-	2	W
		f=1.8MHz, L=460nH, good thermal contact with cooling plate at 18°C	-	-	10	W
PWM						
DMax	Maximum Duty Cycle		-	100	-	%
DMin	Minimum Duty Cycle		-	0	-	%
Error Amplifier						
DCG	DC Gain	CL = 1pF at VF Pin	-	90	-	dB
UGBW	Unity Gain-Bandwidth	CL = 1pF at VF Pin	-	20	-	MHz
SR	Slew Rate	CL = 1pF at VF Pin	-	10	-	V/µs
Under-Voltage Lockout						
VinStartTh	Vin start threshold	Vin rising trip level ([2])	-	4.79	-	V
VinStopTh	Vin stop threshold	Vin falling trip level ([2])	-	4.52	-	V
Enable						
EnStartTh	Enable start threshold	Enable rising trip level ([2])	-	815	-	mV
EnStopTh	Enable stop threshold	Enable falling trip level ([2])	-	730	-	mV
EnSerRes	Enable pin series resistance (to limit current through ESD when MAG-PSU00001-NP is not powered)		-	10	-	kΩ
Protections						
OCPpk	Over Current Protection peak level	Vin=10V, Vout=2.5V, f=1.8MHz, L=460nH, Tcoolingpad≈18°C, ([3])	-	6	-	A
OCPavg	Over Current Protection average output current level	Vin=10V, Vout=2.5V, f=1.8MHz, L=460nH, Tcoolingpad≈18°C, ([2]),([4])	-	4.8		A
OTPStartTh	Over Temperature Protection start threshold	Tj rising trip level, ([5])	-	103	-	°C
OTPStopTh	Over Temperature Protection stop threshold	Tj falling trip level, ([5])	-	73	-	°C
Soft Start						
SSt	Duration of the Soft Start procedure to reach regulation at nominal Vout	Vin=10V, Vout=2.5V, f=1.8MHz, L=410nH, Tcoolingpad≈18°C, ([2]),([6])		440		us
Power Good						
OV	Output Over Voltage PGood upper threshold			+6.5		%
UV	Output Under Voltage PGood lower threshold			-6.5		%
Proportional To Absolute Temperature signal						

[1] Max rated output current only allowed if max output power is not exceeded.
[2] Average value taken from measurements on 10 samples from the production run.
[3] This value has not been measured precisely and is reported as approximate indication of the peak current detection for OCP. The peak value does not have relevant dependence on Vin and Vout.
[4] The OCP uses a peak detector, hence the average output current for OCP detection depends on the input and output voltages. In particular, the OCP detection current for Vin=10V is not significantly different for Vout of 2.5-5V, whilst it increases by about 10% at 1.8V and even further at smaller output voltages.
[5] The threshold temperature for OTP is approximate, since it is not measured on-chip (no junction T available when the measurements have been done, on version 2.0 of DCDC1100). Fully assembled DCDC1100 boards regulating 2.5V with no load were put in good thermal contact with a thermal chuck, and T was increased. The temperature of the chuck when the DCDC1100 module turned off (and back on) was taken as threshold.
[6] The duration of the Soft Start does not have a relevant dependence on Vin and Vout.

CONFIDENTIAL

SYMBOL	PARAMETER	TEST CONDITIONS	MIN	TYP	MAX	UNITS
PTAT	Analog output voltage	Converter disabled, environmental T sweep		8.5		mV/°C

11. Block Diagram

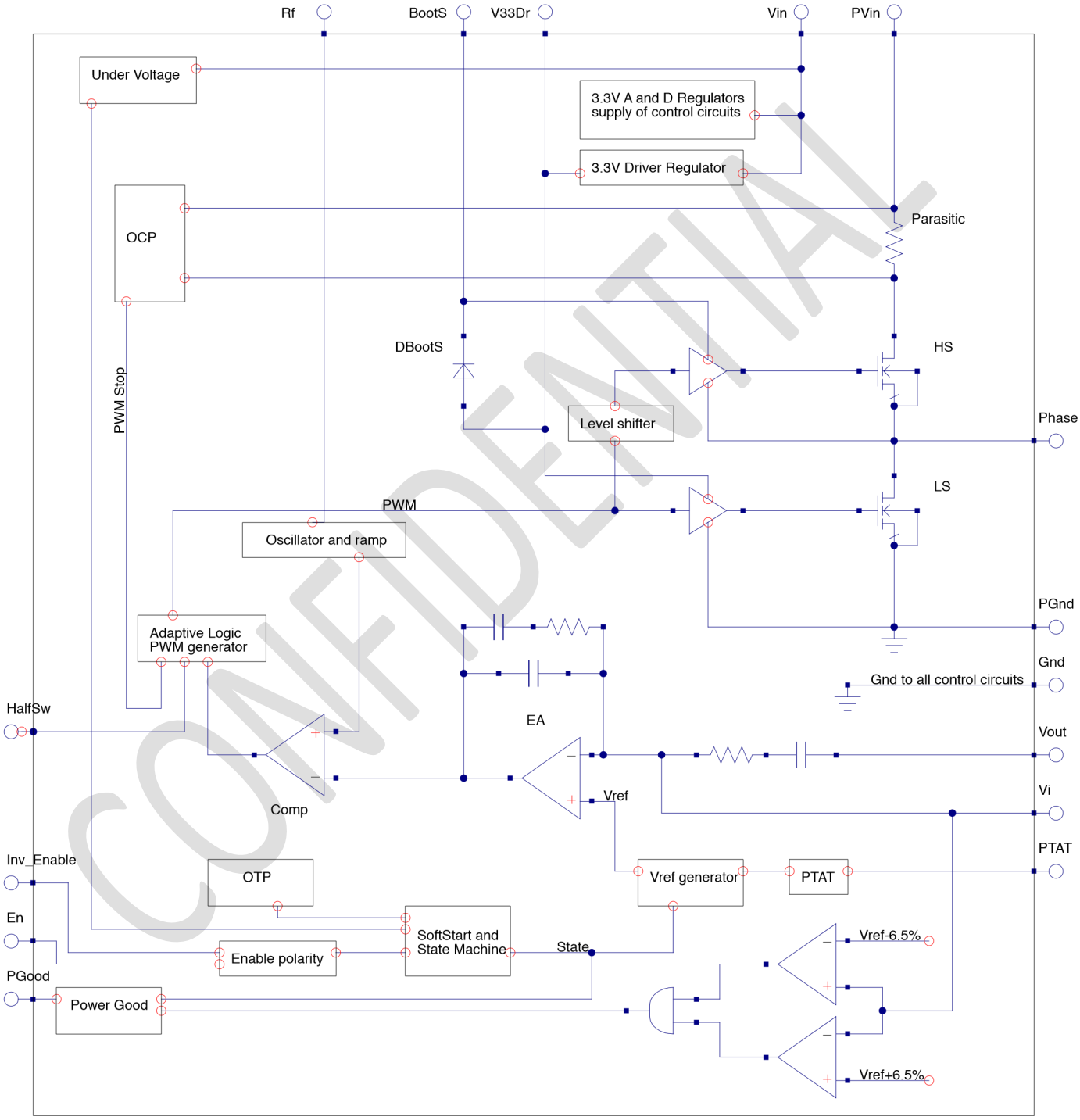

Figure 5: Block diagram of the MAG-PSU00001-NP.

CONFIDENTIAL

12. Operation

MAG-PSU00001-NP is a DCDC converter designed specifically for application in the high radiation and magnetic field of experiments in High Energy Physics. Radiation tolerance is a particularly difficult target for a DCDC converter, and its achievement required to compromise on other performances typically important in similar components in the commercial marketplace. The typical application at steady large load current with power provided from a remote supply (not from a battery) implies very relaxed requirements on quiescent current, while a fast feedback loop is at premium for some detectors where current consumption might have an instantaneous threefold increase.

12.1 Output voltage selection

The output voltage is determined by the choice of the 2 resistors in voltage divider configuration between Vout and gnd ()). In doing so, it is important to know as precisely as possible the value of the reference voltage to the Error Amplifier. This has been measured on 40 tests points on each production wafer. The average value over the 6 wafers is 599mV with a standard deviation of 5.7mV (minimum measured: 583mV; maximum measured: 613mV).

12.2 Switching frequency

The switching frequency of the converter can be adjusted with one external resistor, which provides the bias current to the embedded oscillator. Although MAG-PSU00001-NP has been tested as functional over a wide range of frequency (1 to 3.5MHz), best performance is achieved in the range of 1.5-2MHz. At lower frequency, the peak-peak current in the small air-core inductor increases excessively and determines useless losses and possibly an early onset of the OCP. At higher frequency, driving losses increases dramatically and make the efficiency drop very sensibly. While usage at 1.5MHz allows top efficiency, 1.8MHz operation allows for reduced conductive noise and is preferred as default configuration.

12.3 Embedded linear regulators

While it can operate from a supply voltage of up to 11V, the control electronics in MAG-PSU00001-NP requires powering at 3.3V. A number of linear regulators are embedded to provide appropriate voltage to the drivers of the power transistors, to the bandgap and reference current generator, to the analog and to the digital circuitry. With the exception of the voltage regulation for the power transistors' drivers, all storage capacitors required for the regulators are on-chip and have been sized to ensure steady voltage even during large current surges.

12.4 Under-Voltage lockout

The embedded linear regulators need a sufficient level of overvoltage to provide stable 3.3V voltage to the control circuitry. To prevent faulty operation because of lack of appropriate supply to the control electronics, an on-chip comparator only enables operation of the circuit when the input voltage is above about 4.8V (on rising Vin). This comparator has an hysteresis and MAG-PSU00001-NP is disabled again when, for falling Vin, the input voltage drops below about 4.5V.

12.5 Enabling MAG-PSU00001-NP

The circuit is disabled by default, so it will not start when a sufficient Vin is applied to its input unless the available enable pin (En) has not been asserted by applying a voltage above about 820mV. MAG-PSU00001-NP can hence be turned on-off by a control signal without the need for removing the power to its Vin bus, which makes easy its parallelization on the same supply bus (each MAG-PSU00001-NP providing regulated power to a different load). The polarity of the enable signal can however be inverted by connecting the Inv_Enable pin to gnd. In this case, the circuit is disabled when a voltage above 820mV is applied to the enable (En) pin; it is hence enabled by default if the En pin is floating – an internal pull-down resistor of 500 kΩ keeps the voltage of the pin to gnd.

12.6 Soft Start procedure

When the converter is enabled a large current is required to charge the output capacitors to the nominal regulated voltage. This current has to be limited to avoid circuit damage. A pre-defined Soft Start (SS) procedure takes care of limiting the inrush current by gently increasing the reference voltage of the EA, the output voltage reaching the nominal value in about 440us in the nominal configuration using the 0.6V bandgap (at the switching frequency of 1.8MHz, this time varying inverse linearly with frequency). Every time the converter is disabled – either by acting on the En pin, by under-voltage lockout, or by OTP detection – it follows a hard-wired sequence to reach the state where it efficiently regulates the output voltage. This sequence is controlled by an embedded 2bits state

CONFIDENTIAL

machine. SS takes place in the third of the 4 states and finishes when the rising reference voltage slightly exceeds the bandgap reference voltage. At this time, the reference to the EA is switched to the steady reference generator (bandgap). It is hence normal to observe a small decreasing voltage step in Vout at the end of the SS procedure.

12.7 Power Good flag

The PG output pin is used to signal that MAG-PSU00001-NP is correctly regulating the output voltage. For easy compatibility with almost any CMOS logic level up to 3.3V, this output is an open drain (of an NMOS transistor). This transistor is normally disabled when the converter is regulating correctly, while it is turned on otherwise: in disabled state (En pin low), in OTP, in reset and when the output voltage is outside a ±6.5% window around nominal. In the absence of Vin, or in under-voltage lockout, power is not provided to the control electronics and the open-drain transistor cannot exert its pull-down function. To avoid PG to rise in this condition it is recommended to use Vout as pull-up voltage (either directly or via a voltage divider).

Current in the NMOS pull-down transistor has to be limited below 50uA, so an appropriate pull-up network has to be selected. The absolute maximum voltage on the PG pin is 3.6V.

12.8 Over-Temperature Protection (OTP)

A dedicated circuit monitors the on-chip junction temperature and disables MAG-PSU00001-NP when it reaches about 103°C (the OTP temperatures are not precisely measured since T is not measured on MAG-PSU00001-NP itself). The OTP has a hysteresis of about 30°C, hence the converter restarts (with SS) when the junction temperature decreases below 73°C. In case of inefficient cooling, it is hence possible that the converter cycles between the disabled and enabled states at a frequency dependent on the load and cooling conditions.

12.9 Over-Current Protection (OCP)

OCP is integrated as a real peak detector on the current flowing during each cycle in the HS transistor. Current sensing takes place on the parasitic resistance of metal lines bringing the input current from the input pads to the HS transistor. When the instantaneous current exceeds about 6A (approximate value), the PWM is reset and forces the HS to turn off. If the excessive load current condition persists, the on-time of the HS is not determined anymore by the feedback loop (which would require longer on-times to provide more output power) but by the OCP, and as a consequence the output voltage drops. This condition might endure as a steady state, PG being pulled to gnd if the output voltage drop exceeds 6.5% of the nominal. The peak current of 6A translates in different average output current depending on the input and output voltage, frequency and inductor value.

12.10 Compensation network

The compensation network is fully integrated and determines a typical loop bandwidth of about 150kHz in the recommended operation environment (frequency, voltages, inductor, on-board passives). MAG-PSU00001-NP is hence capable of quickly adjusting the output voltage in case of output load transients.

12.11 Cooling

MAG-PSU00001-NP is specified for operation up to 10W output power. With an efficiency of 80% in case of large load current and not– cryogenic cooling, this translates in more than 2W lost in the converter (including the resistance of the inductor and of other passive components). Most of this power is burnt by the chip itself and needs to be transferred to the cooling system efficiently. The chosen qfn32 package has an exposed cooling pad to which the IC is directly attached, and the pad must be soldered to the gnd plane of the PCB which itself must have a good thermal contact to the cooling method used.

12.12 Operation at small output current

The size of the power transistors has been chosen for optimum efficiency in the output current range of 1.5-2.5A. For small output currents the excessive size of the transistors induces a large penalty in efficiency, since their large gate capacitance has to be charged at every switching cycle (large driving losses). To partially reduce the losses associated to the large size of the power train, it is possible to stop a fraction of the drivers by pulling down (to gnd) the HalfSw pin. In this way, only 2/5th of the HS and LS transistors are switching, increasing their effective on-resistance (not too relevant for small load currents) but saving switching power. The power efficiency at small loads, is given in , for currents up to 1000mA, measured @ the following nominal conditions:Vin=10V, Vout=2.5V, f=1.8MHz, L=460nH.

CONFIDENTIAL

MAG-PSU00001-NP– Radiation tolerant 10W Synchronous Step-Down Buck DC/DC converter

Table 3: Power efficiency at small current loads.

	Efficiency (%)	
Iout (mA)	HalfSw floating	HalfSw grounded
100	39.3%	44.6%
200	56.5%	61.0%
300	64.6%	68.1%
400	69.9%	73.0%
500	73.7%	75.8%
600	76.8%	77.7%
700	78.5%	79.4%
800	79.6%	80.1%
900	80.2%	80.4%
1000	80.8%	80.4%

12.13 Proportional To Absolute Temperature (PTAT) voltage

The PTAT analog signal can be used to monitor the T increase of the MAG-PSU00001-NP ASIC during operation, in particular to verify that the cooling is appropriate. The absolute value of the PTAT voltage at a given T has a wide sample-to-sample variability. However, the PTAT increase with respect to T is very close to a straight line with slope 8.5 mV/°C. This has been verified on 4 samples from 2 different manufacturing lots: although the PTAT value at the same T could vary by 200mV, all samples had a linear dependence between **Δ**PTAT and **Δ**T, with a very similar slope (averaging 8.5). This linear relation is shown for one of the measured samples in Figure 6. The discontinuity above 100°C happens when the OTP sets in and is due to a hysteresis inserted because of the over-T protection. The vertical scale has an origin at about 25°C inthis case because the PTAT variation has been arbitrarily referred to the value at that T. Given the variability in the absolute value of the PTAT, it is possible that some sample outputs a 0V signal for very low T and only start to the linear relation at higher temperature. In our tests, this happened in one sample (0V output between -30 and -18°C).

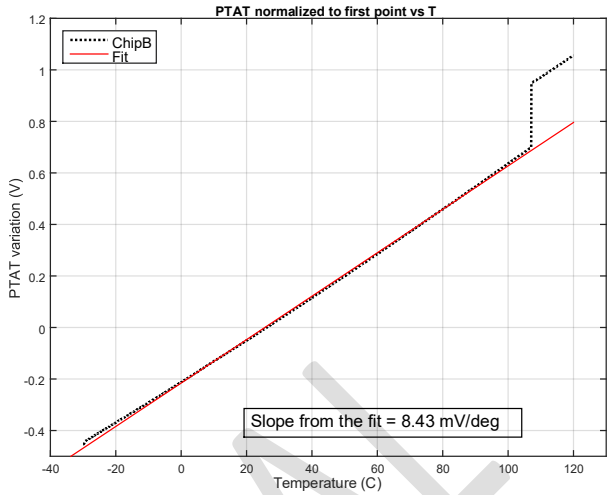

Figure 6: PTAT variation as a function of temperature.

12.14 Radiation tolerance

12.14.1 Total ionizing dose effects

Samples have been exposed under bias at 25 °C and -25 °C, while biased at 10V input voltage and providing 2A current to a load. The radiation source was the CERN X-ray irradiation system accelerating 40keV electrons on a Tungsten target.

While the output voltage andinput/output currents were measured every few seconds, the irradiation was periodically stopped for a few minutes to measure the evolution of other parameters of the converter, in particular the thresholds for the enable, the OVC, OTP and UVLO protection circuits. All these parameters were never found to shift significantly during the irradiation and consequent annealing. After irradiation, annealing was performed first at room temperature for a week and then at 100 °C for another week, always with the sample actively regulating its output voltage.

No significant changes have been observed a radiation levels higher than 100 krad.

12.14.2 Single event effects

The SEE test was performed at the Heavy Ion irradiation Facility (HIF) of the Cyclotron Resource Centre (CRC) of Louvain-la-Neuve, Belgium, using the available high penetration ion cocktail. Two samples were exposed at room temperature, with the available water cooling system to allow heat dissipation in the vacuum chamber, while providing 1 or 2 A to a load at 1.2 and 2.5 V. A bank of fast comparators with programmable threshold, as well as an oscilloscope, constantly monitored the output voltage of the exposed converter during the test. Every time the voltage was above (or below) the threshold, the comparator tripped and

CONFIDENTIAL

provided a signal to an FPGA-based control system: the duration of this signal corresponds to the time over/below threshold. The PowerGood signal was also monitored at the same time.

During the 5-hours irradiation, with Ar, Ni and Kr ions at different angles for effective Linear Energy Transfers (LETs) in the range of 10.2 to 65.2 MeVcm^{2}mg^{-1}, samples were exposed to a total integrated flux of about 126 million ions.

MAG-PSU00001-NP constantly provided regulated power to the load all the time: no reset or functional interrupt was ever observed. The observed SETs are summarized in Table II and III for falling single event and rising single transients respectively. From the tables, it is possible to see that SETs exceeding 6% of the nominal voltage only occur above a LET of 20 MeVcm2mg-1.

In proton or neutron particle environments SETs will hence be limited to amplitudes below 6%. It is also possible to observe how the cross-section and duration of the events increase with the LET of the incoming ion. SETs above 20% of the output voltage were not observed even with the highest available LET.

Table 4: Cross section in (in cm2) during a 5 hour heavy ION radation with a total integrated flux of 125 Millions ions for falling single event transients in function of the Linear energy transfer (MeVcm2mg-1) and observed deviation of the output voltage (%)

LET	Falling SET threshold (% of V_{out})			
	2%	6%	10%	20%
10.2	$2.4*10^{-8}$ (-)	$7.7*10^{-8}$ (-)		
12.45	$9.9*10^{-7}$ (2.4)		$9.8*10^{-7}$ (-)	
14.42	$6.5*10^{-6}$ (4.1)	$9.4*10^{-8}$ (-)		
17.78		$3.3*10^{-7}$ (-)		
20.4		$3.0*10^{-6}$ (1.6)	$1.3*10^{-6}$ (1.4)	
24.9		$6.6*10^{-6}$ (1.4)	$5.0*10^{-6}$ (1.4)	
32.6		$1.0*10^{-5}$ (2.2)	$8.0*10^{-6}$ (1.5)	$1.4*10^{-7}$ (-)
46.1			$9.0*10^{-6}$ (1.5)	
65.2			$8.1*10^{-6}$ (1.5)	

Table 5: Cross section in (in cm2) during a 5 hour heavy ION radation with a total integrated flux of 125 Millions ions for rising single event transients in function of the Linear energy transfer (MeVcm2mg-1) and observed deviation of the output voltage (%).

LET	Rising SET threshold (% of V_{out})			
	2%	6%	10%	20%
10.2	$3.4*10^{-7}$ (0.5)	$7.7*10^{-8}$ (-)		
12.45	$2.7*10^{-6}$ (1.3)		$1.4*10^{-7}$ (-)	
14.42	$5.4*10^{-7}$ (1.0)	$9.4*10^{-8}$ (-)		
17.78		$3.3*10^{-7}$ (-)		
20.4		$6.6*10^{-7}$ (0.4)	$1.4*10^{-7}$ (-)	
24.9		$3.3*10^{-7}$ (0.5)	$1.4*10^{-7}$ (-)	
32.6		$2.3*10^{-6}$ (1.2)	$1.4*10^{-7}$ (-)	
46.1			$1.4*10^{-7}$ (-)	
65.2			$1.4*10^{-7}$ (0.4)	

13. Validation of operation conditions

All operation conditions can be validated with MAG-PSU00001-NP modules. These are available on request.

CONFIDENTIAL

MAG-PSU00001-NP– Radiation tolerant 10W Synchronous Step-Down Buck DC/DC converter

14. Package description

MAG-PSU00001-NP is packaged in a plastic Quad Flat No-Lead (QFN) package 5.0x5.0x0.9mm in size, with 32 pads and with an exposed pad to be soldered to the PCB for better thermal properties. The package is rated for a chip temperature increase of 27 to 31 °C/W depending on the air flow. The suggested PCB footprint for the integration of MAG-PSU00001-NP is shown in the following figure. The dimension of the signal pads is 0.25x0.5mm and the one of the central exposed thermal pad is 3.6x3.6mm. All distances are referred to the centre of the signal or exposed thermal pads.

The MAG-PSU00001-NP can also be delivered in other types of packages upon customers' request, such as CQFP, PQFP, or PBGA.

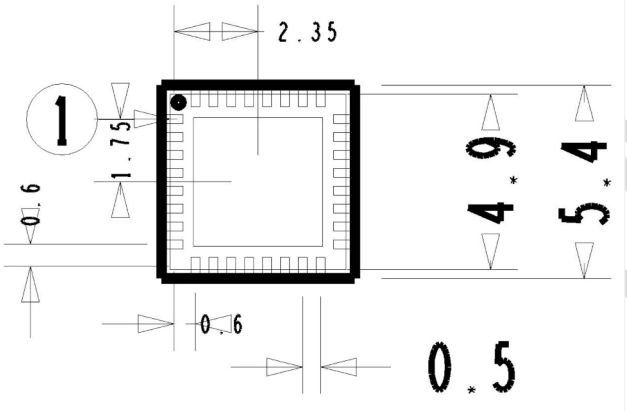

Figure 7: Suggested PCB footprint for the integration of the MAG-PSU00001-NP QFN32 package.

CONFIDENTIAL

15. Product maturity levels

Magics uses the following product maturity levels.

Maturity	Description
PROTO	Functionality tested in typ voltage,temperature; no commitment on spec performance, Package may differ depending on availabilities.
EM	Characterization performed in typ voltage, temperature, no commitment on spec performance
EQM	Characterization performed over full voltage and temperature range
PROD	Qualified samples, no screening
FM	Qualified samples, screening performed

16. Product versions

Product code	Maturity level availability	Description
MAG-PSU00001-NP	**EM, EQM**	Radiation tolerant 10W Synchronous Step-Down Buck DC/DC converter in a QFN32 package

CONFIDENTIAL

MAG-PSU00001-NP– Radiation tolerant 10W Synchronous Step-Down Buck DC/DC converter

17. Revision information

Version number	Date	Change description
2023/04-rev0.4	2023-04-28	- Key performance parameters restructured - Product maturity levels info added - Product versions info added - Revision information introduced
2025/05-rev0.5	2025-05-08	- added a note at the operating temperature: * Note: over-temperature protection kicks in at a lower temperature at ~100 °C. - fixed references in the text. - updated several other captions of figures and tables. - updated maturity levels to EM and EQM. - added maximum current into En pin: 100uA. - updated application diagram: 220nF and 3kOhm load to V33Dr.

CONFIDENTIAL

Disclaimer

Magics Technologies' products are sold by description only. Magics Technologies reserves the right to make changes in circuit design, software and/or specifications at any time without notice. Accordingly, the reader is cautioned to verify that datasheets are current before placing orders. Information furnished by Magics Technologies is believed to be accurate and reliable. However, no responsibility is assumed by Magics Technologies for its use; nor for any infringements of patents or other rights of third parties which may result from its use. No license is granted by implication or otherwise under any patent or patent rights of Magics Technologies.

For information regarding Magics Technologies and its products, see www.magics.tech