MAG-VIS100xx-N- MAG-VIS Vision Modules

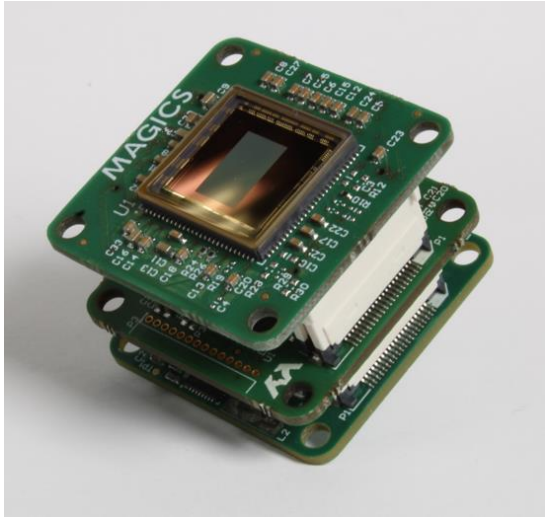

Figure 1: Electronic Vision Module (MAG-VIS10014-N) – comprising Magics' ICs MAG-IMG00251-NC, MAG-CXP0002-NP and 2x MAG-PSU00001-NP.

1. Description

The Magics' Vision Series portfolio contains products which are to be used as core building blocks of a radiation-hardened camera. Next to the standalone ICs in the Vision Series, Magics also offers full-blown electronic Vision modules, containing all ICs from the Vision Series, integrated in the form of a three-PCB stack up. The modules are the electronic heart of a radiation-hardened camera and contain at minimum the following Magics' ICs from the Vision Series:

- MAG-IMG002X1-NC: Full HD CMOS rad-hard image sensor
- MAG-PSU00001-NP: rad-hard DC/DC converter controller
- MAG-CXP00002-NP: CoaXPress serializer IC

Different variants with different features are offered as an end product (overview of product variants can be found in section 7), of which some also contain ICs from the Magics' Motion Series. By incorporating the Motion Series ICs, additional functionality, such as motorized lens control, can be added to the module.

Next to the Magics' ICs all the supporting electronics, as described in the application diagrams in the respective IC datasheets, are integrated into the module. These components include passives, such as resistors, inductors and capacitors, as well as a XTAL oscillator for clock reference input. In addition, there is a connector to supply power (9V) and a HD-BNC connector to interface a 75-Ohm coaxial cable for video transmission (downlink) and configuration data (uplink).

2. Key features

- Modular design consisting of three PCBs containing Magics' ICs and supporting components.
  - Electronic module can be integrated as is in a rad-hard camera. No additional electronic components required!
- Full HD (1920x1080) CMOS image sensor
  - >2Mpixel
  - Up to 30 FPS in Full HD mode
  - Electronic rolling shutter
  - > 60dB dynamic range
  - Available in monochrome and color version
    - RGGB Bayer pattern for color version
- Features
  - Image flipping
  - Dark pixel readout option
  - Programmable integration time
  - Configurable window modes (FHD, HD, VGA, etc.)
- Configurable operating mode
  - Triggered, burst and continuous mode
- CoaXPress video interface: 1.25Gbps single line CXP 2.0 device side interface
  - 1.25Gbps downlink communication
  - 20Mbps uplink communication
  - 75-Ohm coax cable – up to >150m depending on the quality of the cable
  - GenICam compliant
- On-board X-TAL clock of 20 MHz
- Single supply operation: 9V input voltage
  - Internally 3.3V and 1.8V supply voltages are generated
- Operating temperature: 0 to 50 degC ambient
- Different flavors with different functions available.
  - E.g. integrated motorized lens control.
- Radiation hardness:
  - > 1MGy TID (Si)
  - Single-event tolerance by design

Preliminary/confidential

Copyright © Magics Technologies NV / Confidential information

3. MAG-VIS modules and block diagrams

The core products of Magics Technologies are ICs and they form the base for all of our derived products. The ICs in the Vision Series are already listed above and are depicted in Figure 2.

MAG-IMG00241-N: mono
MAG-IMG00251-N: color

MAG-CXP00002-NP

MAG-PSU00001-NP

Figure 2: Three main ICs as part of the Magics' Vision Series. Note: MAG-IMG001X1-NC (JLCC-68 package) has become obsolete.

3.1 MAG-VIS modules overview

Magics offers MAG-VIS modules in the form of a three-PCB stack, of which each PCB has his own function and components. Below the three PCBs in the stack of the MAG-VIS modules are listed:

- **PCB1**: this PCB contains the MAG-IMG002x1-NC FULL HD image sensor
- **PCB2**: this PCB contains a MAG-PSU00001-NP controller to generate the 1.8V supply for the imager (PCB1) and optionally additional functions are added to this PCB as well.
    - Different versions available, for example with a MAG-DRV00002-NP added to the design. See Table 2.
- **PCB3**: this PCB contains the MAG-CXP00002-NP CoaXPress-compatible serializer chip, and a MAG-PSU00001-NP to generate the 3.3V supply to supply the imager and the serializer.

To date, Magics offers three different variants of the MAG-VIS modules (six if differentiated between mono and color), and these modules are depicted in Figure 3.

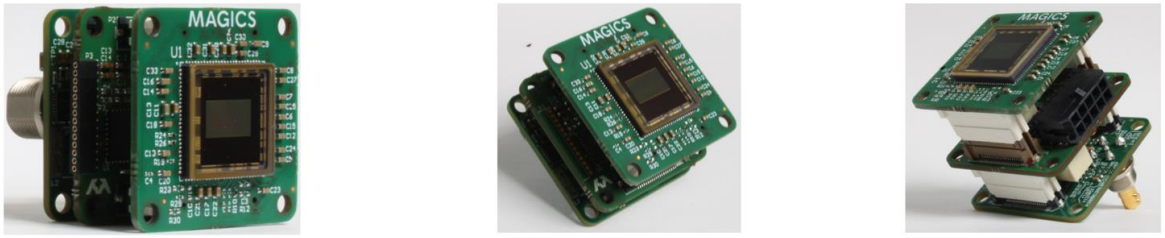

MAG-VIS10003-N: mono
MAG-VIS10004-N: color

MAG-VIS10013-N: mono
MAG-VIS10014-N: color
Module without the MAG-DRV and the 14-pin connector

MAG-VIS10023-N: mono
MAG-VIS10024-N: color
Module with the MAG-DRV and the relays for motor control of lens

Figure 3: MAG-VIS modules - three different variants.

The six different MAG-VIS product codes are listed in the next table (Table 1), together with a listing of the corresponding PCBs integrated in the stack. Each of the modules contain different PCBs, each with a unique product code. These PCBs with product codes are visualized in Figure 4 and are listed in Table 2.

For the corresponding block diagrams of each of the modules, it is referred to section 3.3.

Copyright © Magics Technologies NV

Table 1: Overview of the offered MAG-VIS modules.

MAG-VIS module	PCB1	PCB2	PCB3	Description
MAG-VIS10003-N	MAG-VIS40003-N	MAG-VIS40011-N	MAG-VIS40031-N	MAG-VIS module as in MAG-CAM10003-N – mono imager
MAG-VIS10004-N	MAG-VIS40004-N	MAG-VIS40011-N	MAG-VIS40031-N	MAG-VIS module as in MAG-CAM10004-N – color imager
MAG-VIS10013-N	MAG-VIS40003-N	MAG-VIS40012-N	MAG-VIS40031-N	MAG-VIS module without MAG-DRV00002-NP and 14-pin connector on PCB2 – mono imager
MAG-VIS10014-N	MAG-VIS40004-N	MAG-VIS40012-N	MAG-VIS40031-N	MAG-VIS module without MAG-DRV00002-NP and 14-pin connector on PCB2 – color imager
MAG-VIS10023-N	MAG-VIS40003-N	MAG-VIS40021-N	MAG-VIS40031-N	MAG-VIS module with motorized lens control capability – mono imager
MAG-VIS10024-N	MAG-VIS40004-N	MAG-VIS40021-N	MAG-VIS40031-N	MAG-VIS module with motorized lens control capability – color imager

3.2 MAG-VIS PCB overview

Each PCB within the MAG-VIS module stack has its own unique product code and is also available for individual purchase. Customers interested in this option are encouraged to contact sales@magics.tech. While detailed information regarding the interfaces and pinouts of the individual PCBs is beyond the scope of this datasheet, it can be provided upon request. The primary focus of this document is on the complete MAG-VIS module assemblies (section 3.1).

Each of the offered standalone PCBs of the MAG-VIS modules are depicted in Figure 1 with their corresponding product code. The complete list with additional details is listed in Table 2.

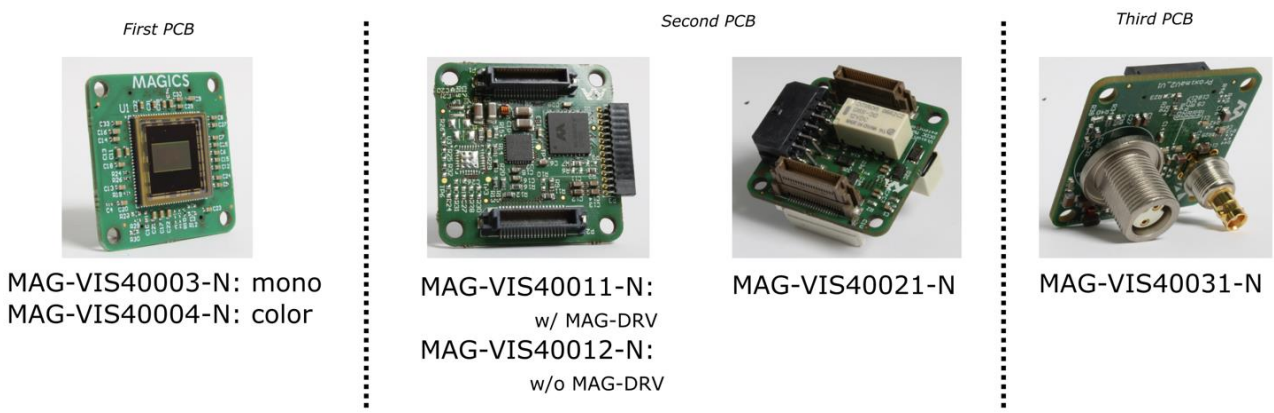

Figure 4: MAG-VIS PCBs which are used in the MAG-VIS modules.

Preliminary

Table 2: Overview of the PCB products in the MAG-VIS family

PCB	MAG-VIS PCB code	Description
PCB1	MAG-VIS40003-N	PCB with MAG-IMG00241-N (mono) imager and passive components for biasing and filtering.
	MAG-VIS40004-N	PCB with MAG-IMG00251-N (color) imager and passive components for biasing and filtering.
PCB2	MAG-VIS40011-N	PCB with MAG-PSU00001-NP to generate the 1.8V for the imager, with a MAG-DRV00002-NP integrated, whose outputs are accessible through a 14-pin connector at the side.
	MAG-VIS40012-N	PCB with a MAG-PSU00001-NP to generate the 1.8V for the imager.
	MAG-VIS40021-N	PCB with a MAG-PSU00001-NP to generate the 1.8V for the imager. Additionally, MAG-DRV00002-NP and relays are integrated to function as a DC motor controlled for a motorized lens.
PCB3	MAG-VIS40031-N	PCB with a MAG-PSU00001-NP to generate the 3.3V for MAG-IMG002x1-NC, MAG-DRV00002-NP and MAG-CXP00002-NP, and one MAG-CXP00002-NP for video communication.

3.3 Block diagrams of MAG-VIS modules

This section presents the block diagrams of the MAG-VIS modules. While the previous sections provided an overview of the different product variants, this section offers a more detailed look at the internal components and architecture of each module.

3.3.1 MAG-VIS1000x-N

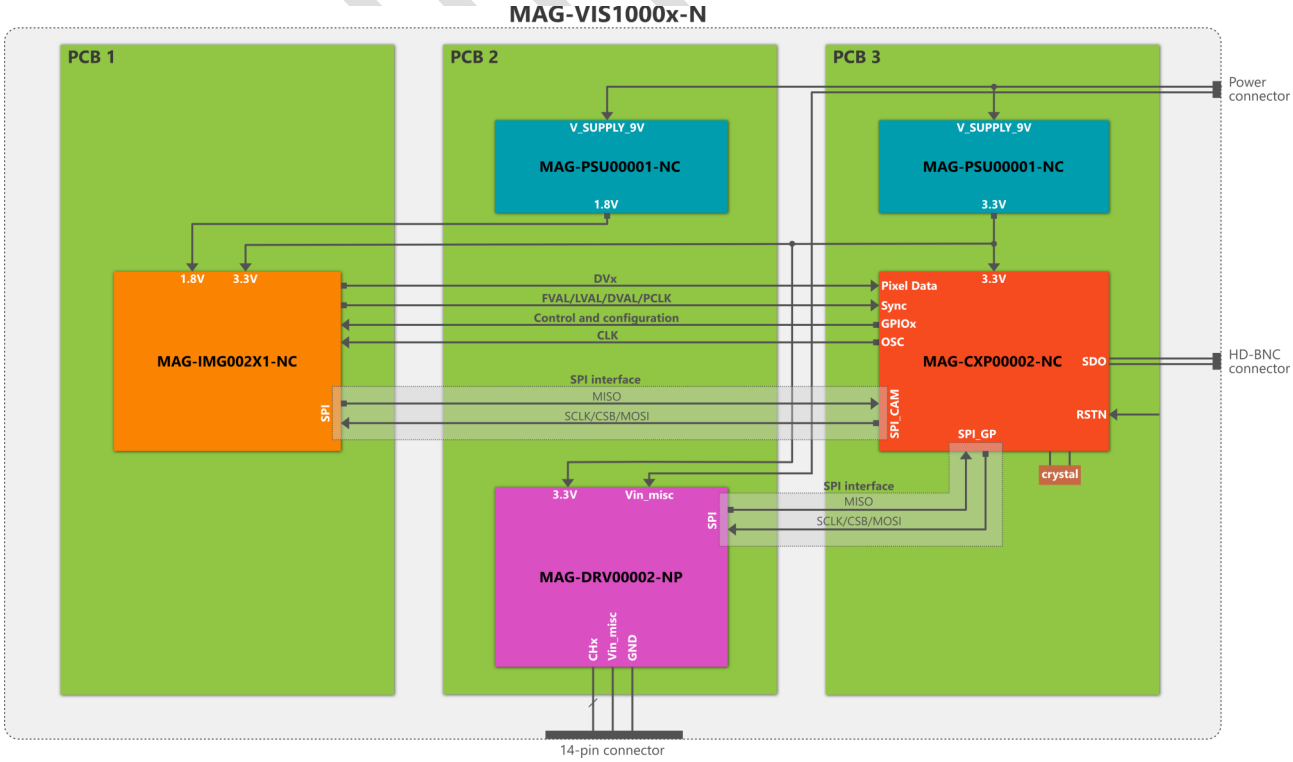

Figure 5: Block diagram of MAG-VIS1000x-N module.

MAG-VIS100xx-N- MAG-VIS Vision Modules

The MAG-VIS1000x-N module is the version integrated into the MAG-CAM demonstrator, but it is also available as a radiation-hardened standalone product. While PCB1 and PCB3 are identical across the MAG-VIS1000x-N, MAG-VIS1001x-N, and MAG-VIS1002x-N variants, the difference lies in the middle PCB (PCB2). This central board defines the specific functionality of each module. A block diagram of the MAG-VIS1000x-N module is shown in Figure 5.

At the core of the module is a Full HD image sensor, mounted on PCB1, available in both monochrome (MAG-IMG00241-NC) and color (MAG-IMG00251-NC) versions. Both versions use the CLCC-104 package. The image sensor communicates via a CMOS parallel interface with the MAG-CXP00002-NP serializer, located on PCB3. This serializer converts the parallel video data into a serialized stream suitable for transmission over a coaxial cable.

All communication lines pass through PCB2, which also handles signaling between components. In addition to the parallel data interface, a dedicated SPI bus is used for communication between the image sensor and the serializer. This SPI interface is exclusively used for configuration and control of the image sensor by the serializer.

The MAG-CXP00002-NP serializer manages all communication between the image sensor and the CoaXPress (CXP) host, effectively presenting the module as a single logical device to the host controller. Through the 20-MHz uplink channel between the frame grabber and the serializer, the host can communicate with both the serializer and the image sensor. The register maps are designed to appear unified, making the system fully GenICam compliant.

In addition to the vision-related components, the MAG-VIS1000x-N module includes an extra device from Magics' Motion Series: the MAG-DRV00002-NP driver IC. This chip provides eight low-side drivers, each capable of sourcing up to 125 mA, ideal for applications such as LED control. The driver IC is controlled via a second master SPI interface on the serializer, which is also accessible via the CXP uplink, allowing full remote control from the frame grabber.

A 14-pin connector located on the side of the module (see Figure 3 and Figure 4) provides:

- Access to the eight low-side driver outputs.
- A 9V power supply input.
- Ground connections.

The following table lists the connections to these 14 pins:

Table 3: 14-pin connector connections.

1 (L)	**2**	**3**	**4**	**5**	**6**	**7**	**8**	**9**	**10**	**11**	**12**	**13**	**14 (R)**
GND	CH7	CH6	CH5	CH4	9V	9V	9V	9V	CH0	CH1	CH2	CH3	GND

For the dimensions of the modules, it is referred to section 0.

Preliminary

Copyright © Magics Technologies NV

3.3.2 MAG-VIS1001x-N

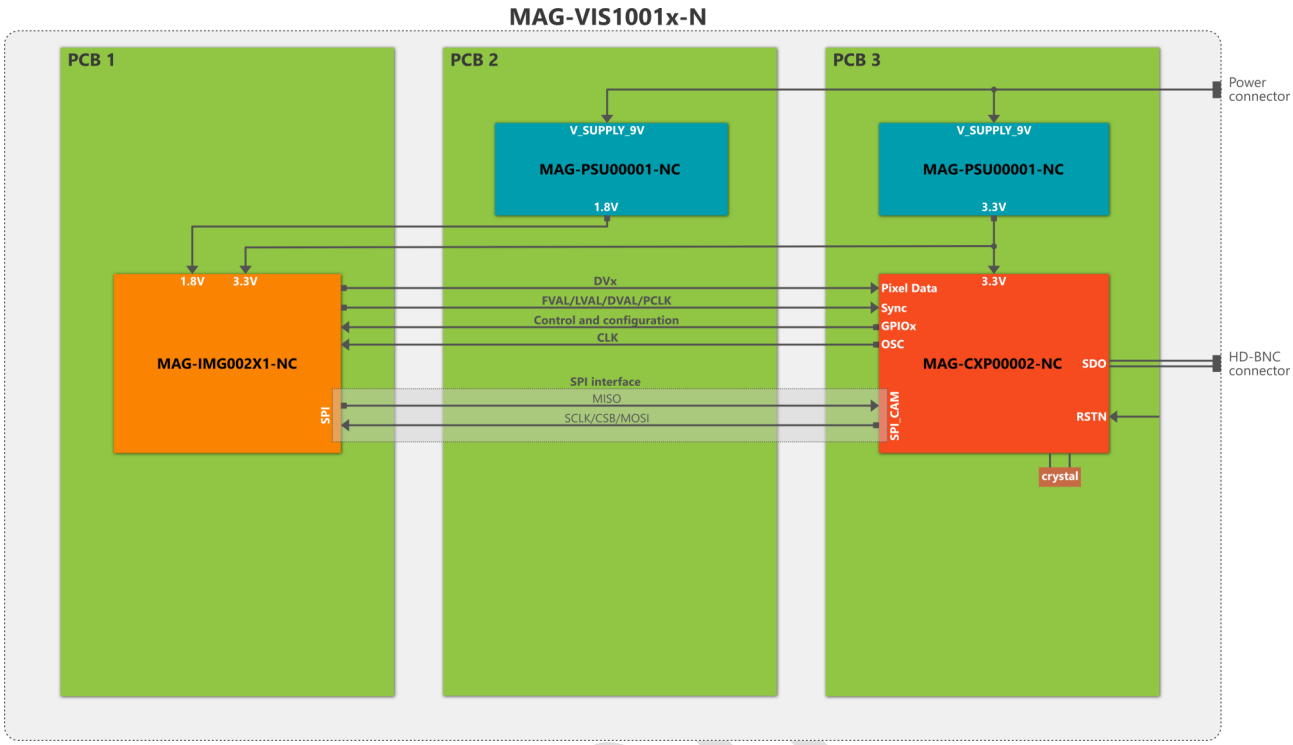

Figure 6: Block diagram of MAG-VIS1001x-N module.

Figure 6 shows the block diagram of the MAG-VIS1001x-N module, which is a simplified version of the MAG-VIS1000x-N. In this variant, the MAG-DRV00002-NP driver IC and the 14-pin connector are omitted from PCB2. As a result, the module focuses solely on the core camera chipset functionality.

Prelim

3.3.3 MAG-VIS1002x-N

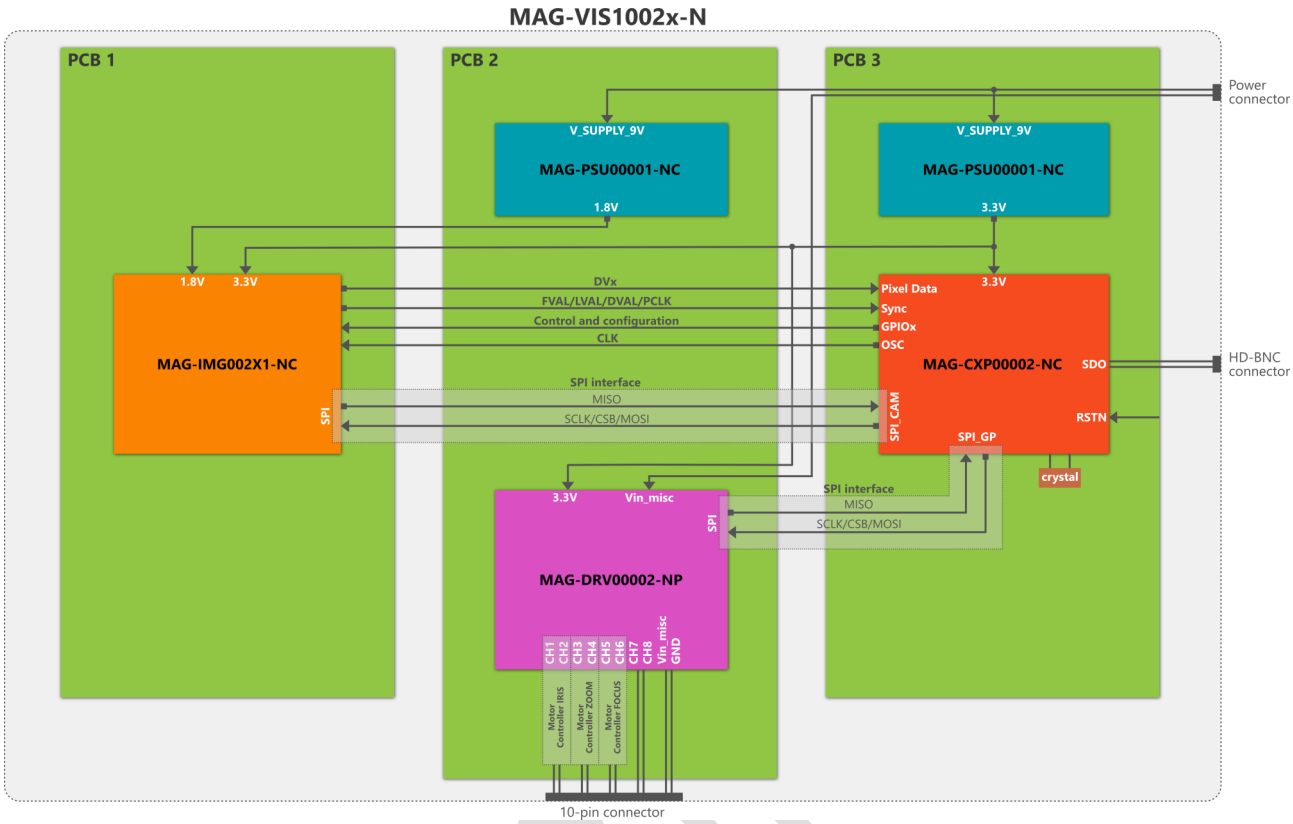

Figure 7: Block diagram of MAG-VIS1002x-N module.

The most recent addition to the product line is the MAG-VIS1002x-N module, with its block diagram shown in Figure 7. This variant introduces DC motor control functionality integrated into PCB2, enabling open-loop control of up to three brushed DC motors. This makes the module well-suited for driving motorized lenses with zoom, iris, and focus control.

Prelim

4. Specifications

4.1 Absolute maximum ratings

The absolute maximum ratings are the ratings for which the device does not get permanently damaged, but in which the performance is not guaranteed.

Name	Description	Min	Abs. Max	Unit
V_SUPPLY_9V	Power supply to the module	0	12	V
Tj	Junction temperature of silicon	-40	85	°C
Tstorage	Storage temperature	0	50	°C

4.2 Electrical characteristics

Label	Parameter	Test conditions	Min	Typ	Max	Unit
I_SUPPLY_9V	Current consumption on power supply module	See more details on conditions in the table below.	160		257	mA
Z_out_AC	AC output impedance HD-BNC			75		Ohm

For the IC-related electrical characteristics, it is referred to the corresponding IC datasheets.

Detailed current consumption on the power supply module, label: I_SUPPLY_9V.

Test conditions					Min	Typ	Max	Unit
Camera Mode	V_SUPPLY_9V	Exposure time [µs]	Temperature	Light condition				
FULLHD 10 FPS	6V	40 000	Room	Full dark		194		mA
		100		Full light		197		mA
		40 000		Full light		209		mA
FULLHD 25 FPS		40 000		Full dark		236		mA
		100		Full light		236		mA
		40 000		Full light		251		mA
FULLHD 30 FPS		40 000		Full dark		235		mA
		100		Full light		248		mA
		40 000		Full light		257		mA
HD 40 FPS		40 000		Full dark		216		mA
		100		Full light		225		mA
		40 000		Full light		231		mA
VGA 50 FPS		40 000		Full dark		195		mA
		100		Full light		199		mA
		40 000		Full light		202		mA
FULLHD 10 FPS	9V	40 000		Full dark		160		mA
		100		Full light		162		mA
		40 000		Full light		164		mA
FULLHD 25 FPS		40 000		Full dark		180		mA
		100		Full light		185		mA
		40 000		Full light		197		mA
FULLHD 30 FPS		40 000		Full dark		187		mA
		100		Full light		194		mA
		40 000		Full light		200		mA
HD 40 FPS		40 000		Full dark		174		mA
		100		Full light		175		mA
		40 000		Full light		184		mA
VGA 50 FPS		40 000		Full dark		160		mA
		100		Full light		163		mA
		40 000		Full light		165		mA

Preliminary

4.3 Recommended operating conditions

Description	Min	Typ	Max	Unit
V_SUPPLY_9V	6	9	11	V
Coaxial cable impedance		75		Ohm
Coaxial cable attenuation 625 MHz (for high-speed downlink)			21.2	dB
Coaxial cable attenuation @30MHz (for low-speed uplink)			4.74	dB
Operation temperature - environmental	0	-	50	°C
Exposure time – see below in section 4.3.1	0		5	ms

4.3.1 Recommended operating conditions in radiation environment

The primary performance parameter affected by irradiation is dark current. As radiation dose accumulates, dark current increases, which can cause the image to saturate more quickly during long exposure times. However, in terms of functionality, the imager remains fully operational.

Due to on-chip parameter drifts induced by radiation, some biasing parameters may require adjustment over the sensor's lifetime. This re-tuning is straightforward and involves uploading updated register settings via the CoaXPress (CXP) link—no manual intervention on the camera hardware is necessary. Note that, regardless of irradiation, the camera already requires a register map upload at boot to apply the correct configuration.

Additionally, dark current also increases with temperature, which is a well-known behaviour of all CMOS image sensors. Importantly, the sensor’s self-heating is influenced by the radiation dose rate—a higher dose rate leads to a greater temperature rise, further amplifying dark current.

Recommended Operating Guidelines for High-Dose Environments (>1 kGy/hr)

To ensure optimal sensor performance under high radiation conditions:

- Minimize exposure time (preferably below 5 ms):
  - Longer exposures result in more integrated dark current.
  - Exposure time can be dynamically adjusted via CXP uplink commands.
- Maintain low sensor temperature:
  - Implement active cooling solutions to prevent self-heating.
  - With effective thermal management, strict exposure time limitations may be relaxed.

Lower Dose Rate Conditions (<0.5 kGy/hr)

At lower dose rates, sensor self-heating is significantly reduced. As a result, dark current remains relatively stable, and the impact on image quality is minimal.s

Preliminary

5. Mechanical dimensions and interfaces

5.1 Dimensions

Below an overview of the mechanical dimensions of the MAG-VIS100xx-N is given. Note that the PCB X-Y dimensions are exactly the same for all the module variants. The depth of the module, however, depends on the variant.

The lens mounting position is always 13.63 mm from the top PCB.

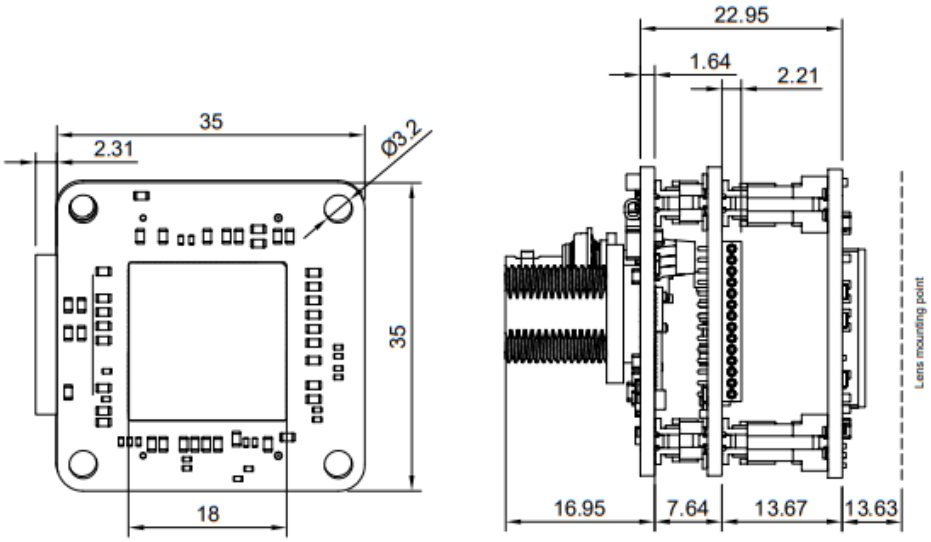

Figure 8: MAG-VIS1000x-N module PCB and stack-up dimensions [mm].

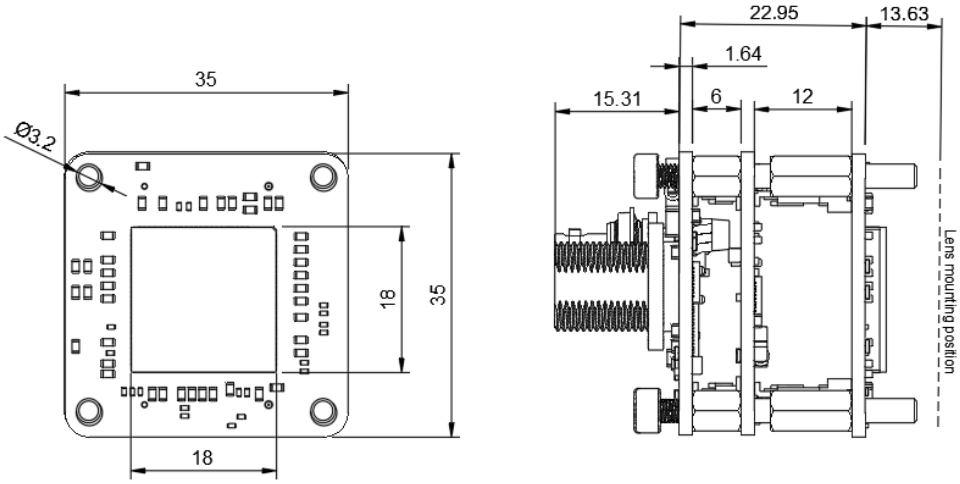

Figure 9: MAG-VIS1001x-N module PCB and stack-up dimensions [mm].

Copyright © Magics Technologies NV

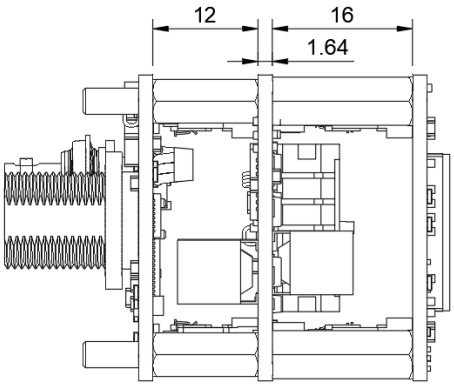

Figure 10: MAG-VIS1002x-N module PCB and stack-up dimensions [mm].

Preliminary

5.2 Connectors

In this section more details are given on the used connectors.

5.2.1 14-pin connector

<table>
<tr><td>Connector name</td><td>14-pin connector</td></tr>
<tr><td>Description</td><td>This connector gives access to the low-side driver pins of the driver IC MAG-DRV00002-NP. In addition to the access to the low-side drivers, it also gives access to the 9V power supply and corresponding ground (see section 3.3.1).</td></tr>
<tr><td>PCB</td><td>Integrated on MAG-VIS40011-N
 </td></tr>
<tr><td>Manufacturer part number</td><td>851-43-014-20-001000</td></tr>
<tr><td>Manufacturer description</td><td>14 position receptacle connector, pitch: 0,050” (1,27mm)</td></tr>
<tr><td>Pinout</td><td>
<table>
<tr><th>PIN</th><th>Description</th></tr>
<tr><td>1</td><td>GND</td></tr>
<tr><td>2</td><td>CH7</td></tr>
<tr><td>3</td><td>CH6</td></tr>
<tr><td>4</td><td>CH5</td></tr>
<tr><td>5</td><td>CH4</td></tr>
<tr><td>6</td><td>V_SUPPLY_9V</td></tr>
<tr><td>7</td><td>V_SUPPLY_9V</td></tr>
<tr><td>8</td><td>V_SUPPLY_9V</td></tr>
<tr><td>9</td><td>V_SUPPLY_9V</td></tr>
<tr><td>10</td><td>CH0</td></tr>
<tr><td>11</td><td>CH1</td></tr>
<tr><td>12</td><td>CH2</td></tr>
<tr><td>13</td><td>CH3</td></tr>
<tr><td>14</td><td>GND</td></tr>
</table>
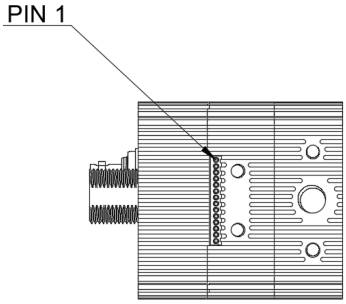

</td></tr>
</table>

Preliminary

5.2.2 10-pin connector

Connector name	10-pin connector
Description	This connector serves as the interface for the lens's iris, zoom, and focus motors. This connector also provides access to 2 low-side driver pins of the MAG-DRV00002-NP IC, along with power and ground connections.
PCB	Integrated on **MAG-VIS40021-N**
Manufacturer part number	43045-1006
Manufacturer description	10 position pin header, pitch: 3mm, 2 rows
Pinout	

PIN	Description
1	IRIS A(CH1)
2	IRIS B(CH2)
3	ZOOM A(CH3)
4	ZOOM B(CH4)
5	FOCUS A(CH5)
6	FOCUS B(CH6)
7	CH7
8	CH8
9	Vin_misc
10	GND

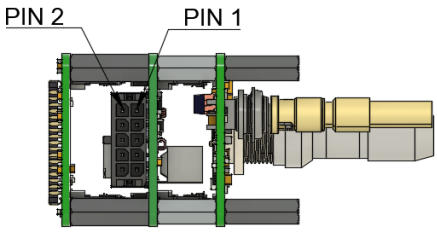

5.2.3 Power connector

Connector name	Power connector
Description	The main power connector.
PCB	Integrated on **MAG-VIS40031-N**
Manufacturer part number	TS2P3F20-BP
Manufacturer description	3 position circular connector receptacle

Preliminary

Pinout	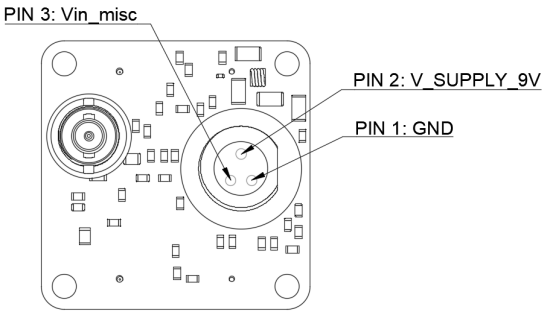

5.2.4 HD-BNC connector

Connector name	HD-BNC
Description	The CoaXPress interface connector.
PCB	Integrated on **MAG-VIS40031-N**
Manufacturer part number	034-1139-12G
Manufacturer description	75 Ohm BNC receptacle connector.
Pinout	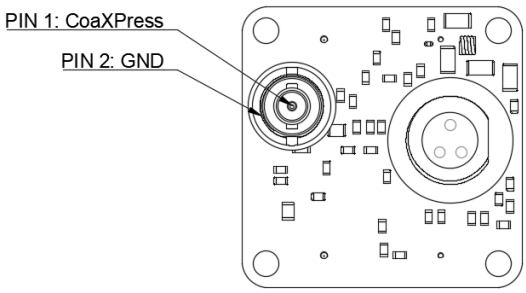

Preliminary

5.2.5 PCB stack-up connector

Connector name	
Description	These male-female connectors are used to interconnect the different PCBs in the stackup.
PCB	Integrated on **all module PCBs** *First PCB* MAG-VIS40003-N: mono MAG-VIS40004-N: color *Second PCB* MAG-VIS40011-N: w/ MAG-DRV MAG-VIS40012-N: w/o MAG-DRV 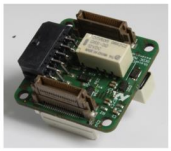 MAG-VIS40021-N *Third PCB* MAG-VIS40031-N
Manufacturer part number	See Figure 11.
Manufacturer description	Board to board connectors.
Pinout	A list of the different signals which run through the entire PCB stack-up is listed in Figure 11.

Preliminary

PCB 1 IMAGER — SIDE TO PCB 2 — MPN: 52901-0474

	P1				P2		
DV_XO	1	2	DV_X6	TV0	1	2	VDDD_1V8
DV_X1	3	4	DV_X7	TV1	3	4	GND
DV_X2	5	6	DV_X8	TV2	5	6	VDDIO_3V3
DV_X3	7	8	DV_X9	TV3	7	8	GND
DV_X4	9	10	DV_X10	NC	9	10	VDDD_1V8
DV_X5	11	12	DV_X11	NC	11	12	VDDD_1V8
GND	13	14	DV_CLK	NC	13	14	VDDD_1V8
NC	15	16	DV_DVAL	NC	15	16	GND
GND	17	18	DV_LVAL	TV8	17	18	TB0
NC	19	20	DV_FVAL	TV9	19	20	TB1
NC	21	22	GND	TV10	21	22	TB2
NC	23	24	TRIGGER	VREF_1V2	23	24	TB3
NC	25	26	GND	VDDA_3V3	25	26	GND
NC	27	28	CLK	GND	27	28	NC
NC	29	30	GND	VDDPLL_3V3	29	30	NC
NC	31	32	IMG_SPI_CS_BAR	GND	31	32	GND
NC	33	34	IMG_SPI_SCLK	VD_RST_3V3	33	34	NC
NC	35	36	IMG_SPI_MOSI	GND	35	36	NC
NC	37	38	IMG_SPI_MISO	NC	37	38	NC
NC	39	40	RST	NC	39	40	NC

PCB 2 POWER — SIDE TO PCB 1 — MPN: 52091-0474

	P1				P2		
DV_XO	1	2	DV_X6	TV0	1	2	FRONT_1V8
DV_X1	3	4	DV_X7	TV1	3	4	GND
DV_X2	5	6	DV_X8	TV2	5	6	VDDIO_3V3
DV_X3	7	8	DV_X9	TV3	7	8	GND
DV_X4	9	10	DV_X10	TV4	9	10	FRONT_1V8
DV_X5	11	12	DV_X11	TV5	11	12	FRONT_1V8
GND	13	14	DV_CLK	TV6	13	14	FRONT_1V8
FRONT_1V25	15	16	DV_DVAL	TV7	15	16	GND
GND	17	18	DV_LVAL	TV8	17	18	TB0
CTR_SPI_SCLK	19	20	DV_FVAL	TV9	19	20	TB1
CTR_SPI_MOSI	21	22	GND	TV10	21	22	TB2
CTR_SPI_MISO	23	24	TRIGGER	VDDBG_1V2	23	24	TB3
CTR_GPIO7	25	26	GND	VDD_3V3	25	26	GND
CTR_GPIO6	27	28	CLK	GND	27	28	V_SUPPLY_9V
CTR_GPIO5	29	30	GND	VDDPIX_3V3	29	30	V_SUPPLY_9V
CTR_GPIO4	31	32	IMG_SPI_CS_BAR	GND	31	32	GND
CTR_GPIO3	33	34	IMG_SPI_SCLK	VDDD_3V3	33	34	Vin_misc
CTR_GPIO2	35	36	IMG_SPI_MOSI	GND	35	36	Vin_misc
CTR_GPIO1	37	38	IMG_SPI_MISO	MEGA_RTEMP_L	37	38	Vin_misc
CTR_GPIO0	39	40	RST	MEGA_RTEMP_H	39	40	Vin_misc

SIDE TO PCB 3 — MPN: 52885-0474

	P4				P5		
DV_XO	1	2	DV_X6	TV0	1	2	BACK_1V8
DV_X1	3	4	DV_X7	TV1	3	4	GND
DV_X2	5	6	DV_X8	TV2	5	6	VDDIO_3V3
DV_X3	7	8	DV_X9	TV3	7	8	GND
DV_X4	9	10	DV_X10	TV4	9	10	BACK_1V8
DV_X5	11	12	DV_X11	TV5	11	12	BACK_1V8
GND	13	14	DV_CLK	TV6	13	14	BACK_1V8
BACK_1V25	15	16	DV_DVAL	TV7	15	16	GND
GND	17	18	DV_LVAL	TV8	17	18	TB0
CTR_SPI_SCLK	19	20	DV_FVAL	TV9	19	20	TB1
CTR_SPI_MOSI	21	22	GND	TV10	21	22	TB2
CTR_SPI_MISO	23	24	TRIGGER	VDDBG_1V2	23	24	TB3
CTR_GPIO7	25	26	GND	VDD_3V3	25	26	GND
CTR_GPIO6	27	28	CLK	GND	27	28	V_SUPPLY_9V
CTR_GPIO5	29	30	GND	VDDPIX_3V3	29	30	V_SUPPLY_9V
CTR_GPIO4	31	32	IMG_SPI_CS_BAR	GND	31	32	GND
CTR_GPIO3	33	34	IMG_SPI_SCLK	VDDD_3V3	33	34	Vin_misc
CTR_GPIO2	35	36	IMG_SPI_MOSI	GND	35	36	Vin_misc
CTR_GPIO1	37	38	IMG_SPI_MISO	MEGA_RTEMP_L	37	38	Vin_misc
CTR_GPIO0	39	40	RST	MEGA_RTEMP_H	39	40	Vin_misc

PCB 3 SERIALIZER — SIDE TO PCB 2 — MPN: 52091-0474

	P1				P2		
DV_XO	1	2	DV_X6	TV0	1	2	VDDIO_1V8
DV_X1	3	4	DV_X7	TV1	3	4	GND
DV_X2	5	6	DV_X8	TV2	5	6	VDDCAM_3V3
DV_X3	7	8	DV_X9	TV3	7	8	GND_3V3
DV_X4	9	10	DV_X10	TV4	9	10	VDDIO_1V8
DV_X5	11	12	DV_X11	TV5	11	12	VDDIO_1V8
GND	13	14	DV_CLK	TV6	13	14	VDDIO_1V8
MEGA_1V25	15	16	DV_DVAL	TV7	15	16	GND
GND	17	18	DV_LVAL	TV8	17	18	TB0
CTR_SPI_SCLK	19	20	DV_FVAL	TV9	19	20	TB1
CTR_SPI_MOSI	21	22	GND	TV10	21	22	TB2
CTR_SPI_MISO	23	24	TRIGGER	VREF_CAM	23	24	TB3
CTR_GPIO7	25	26	GND	VDDA_3V3	25	26	GND
CTR_GPIO6	27	28	CLK	GND	27	28	V_SUPPLY_9V
CTR_GPIO5	29	30	GND	VDDPLL_3V3	29	30	V_SUPPLY_9V
CTR_GPIO4	31	32	IMG_SPI_CS_BAR	GND	31	32	GND
CTR_GPIO3	33	34	IMG_SPI_SCLK	VDDD_3V3	33	34	Vin_misc
CTR_GPIO2	35	36	IMG_SPI_MOSI	GND	35	36	Vin_misc
CTR_GPIO1	37	38	IMG_SPI_MISO	NC	37	38	Vin_misc
CTR_GPIO0	39	40	RST	NC	39	40	Vin_misc

Figure 11: Connector stack-up PIN interface.

Preliminary

6. Operating the MAG-VIS modules

More information on operating the MAG-VIS modules is available when the modules are purchased, in the form of a user manual. In case any additional questions arise, it is advised to contact *sales@magics.tech*.

The MAG-VIS module comes with pre-defined DCF files (basically camera configuration files), which configure the camera for operation in different modes:

- VGA5: VGA resolution at 5 frames per second.
- VGA50: VGA resolution at 50 frames per second.
- VGA100: VGA resolution at 100 frames per second.
- HD5: HD resolution at 5 frames per second.
- HD40: HD resolution at 40 frames per second.
- FHD10: FHD resolution at 10 frames per second.
- FHD25: FHD resolution at 25 frames per second.
- FHD30: FHD resolution at 30 frames per second.

More information on loading the DCF files can be found in the user manual.

Also, Magics has an application note available on the selection of the CXP frame grabber. Magics will be happy to support the customer with it.

7. Product maturity levels

Magics uses the following product maturity levels:

Maturity	Description
PROTO	Functionality tested in typical voltage and temperature; no commitment on specification performance. Package may differ depending on availabilities.
EM	Characterization performed in typical voltage and temperature conditions. No commitment on specification performance.
EQM	Characterization performed over full voltage and temperature range.
PROD	Qualified parts, no screening for space use
FM	Qualified parts, screened for space use

8. Product versions

Product code	Maturity level availability	Description
MAG-VIS10003-N	**EM, EQM**	MAG-VIS module as in MAG-CAM10003-N – mono imager
MAG-VIS10004-N	**EM, EQM**	MAG-VIS module as in MAG-CAM10004-N – color imager
MAG-VIS10013-N	**EM, EQM**	MAG-VIS module without MAG-DRV00002-NP and 14-pin connector on PCB2 – mono imager
MAG-VIS10014-N	**EM, EQM**	MAG-VIS module without MAG-DRV00002-NP and 14-pin connector on PCB2 – color imager
MAG-VIS10023-N	**EM**	MAG-VIS module with motorized lens control capability – mono imager
MAG-VIS10024-N	**EM**	MAG-VIS module with motorized lens control capability – color imager
MAG-VIS40003-N	**EM, EQM**	PCB with MAG-IMG00241-N (mono) imager and passive components for biasing and filtering.
MAG-VIS40004-N	**EM, EQM**	PCB with MAG-IMG00241-N (mono) imager and passive components for biasing and filtering.
MAG-VIS40011-N	**EM, EQM**	PCB with MAG-PSU00001-NP to generate the 1.8V for the imager, with a MAG-DRV00002-NP integrated, whose outputs are accessible through a 14-pin connector at the side.
MAG-VIS40012-N	**EM, EQM**	PCB with a MAG-PSU00001-NP to generate the 1.8V for the imager.
MAG-VIS40021-N	**EM**	PCB with a MAG-PSU00001-NP to generate the 1.8V for the imager. Additionally, MAG-DRV00002-NP and relays are integrated to function as a DC motor controlled for a motorized lens.
MAG-VIS40031-N	**EM, EQM**	PCB with a MAG-PSU00001-NP to generate the 3.3V for MAG-IMG002x1-NC, MAG-DRV00002-NP and MAG-CXP00002-NP, and one MAG-CXP00002-NP for video communication.

The datasheets of the respective IC products can be received at request. Please contact *sales@magics.tech*.

Preliminary

9. Revision information

Version number	Date	Change description
2025/10-rev1.0	2025-10-08	Initial version – first release.
2025/11-rev1.1	2025-11-14	- added new section on product maturity levels - updated disclaimer

Preliminary

Disclaimer

Magics Technologies' products are sold by description only. Magics Technologies reserves the right to make changes in circuit design, software and/or specifications at any time without notice for products in PROTO or EM maturity status. Accordingly, the reader is cautioned to verify that datasheets are current before placing orders. Information furnished by Magics Technologies is believed to be accurate and reliable. However, no responsibility is assumed by Magics Technologies for its use; nor for any infringements of patents or other rights of third parties which may result from its use. No license is granted by implication or otherwise under any patent or patent rights of Magics Technologies.

This development is partially co-funded in collaboration with Fusion For Energy.

For information regarding Magics Technologies and its products, see www.magics.tech