MAG-IMG002X1-NC – Full HD CMOS rad-hard image sensor

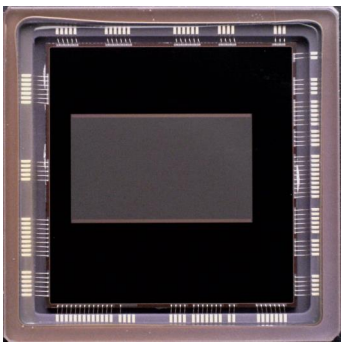

Figure 1: MAG-IMG00251-NC in a custom 104-pin CLCC package with glued rad-hard glass lid.

1. Key performance parameters

- Full HD (1920x1080) CMOS image sensor
  - >2Mpixel
  - 5um pixel size
  - Up to 30 FPS in Full HD mode
  - Electronic rolling shutter
  - > 60dB dynamic range
- Available in monochrome and color version
  - RGGB Bayer pattern for color version
- Input clock of 20 MHz
- Parallel CMOS output interface
  - 10/12 bit
  - FVAL, DVAL, LVAL, PIXCLK sync signals
  - Max. 100 MHz operation speed
- SPI slave interface running up to 20 MHz
- Features
  - Dark pixel readout option
  - Programmable integration time
  - On-chip PLL
- Configurable operating mode
  - Triggered, burst and continuous mode
- Two-supply operation: 1.8V and 3.3V
- Power consumption <1 W typical for FHD30 10-bit.
- Operating temperature: 0 to 85 degC junction (pre-irradiation)
- Ceramic 104-pin CLCC package: 18x18mm
- Radiation hardness
  - TID: > 1MGy (Si)
  - Up to 1 kGy/hr (Si) dose rate
  - Single events: > 62.5 MeV.cm2/mg LET*

  * By design – not tested

2. Applications

Targeted for radiation-harsh environments (such as nuclear power plants):

- In-Service Inspection (ISI)
- Machine vision
- Surveillance
- Decommissioning
- Etc.

3. Description

The MAG-IMG002X1-NC is a radiation-hardened Full HD CMOS digital image sensor with an active-pixel array of 1920Hx1080V. It can come in both a monochrome (MAG-IMG00241-NC) as in a color version (MAG-IMG00251-NC). Both versions implement rolling shutter readout strategy.

The image sensor outputs raw sensor image data through a parallel CMOS output interface (3v3), which is configurable to output 10 or 12 bit pixel data. Synchronization signals such as the pixel clock (PIXCLK), data valid (DVAL), line valid (LVAL) and frame valid (FVAL) are also sent along through the same output interface, which can run up to 100 MHz. The imager can be configured to capture data in trigger mode, in which it can capture one image or multiple images (burst mode), or in continuous mode (video mode). It also includes features such as image mirroring/reversing and sub-sampling/decimation to ease the integration for the end application.

All the above configurations can be programmed through a SPI interface which can run up to 20 MHz.

4. Simplified pinout diagram

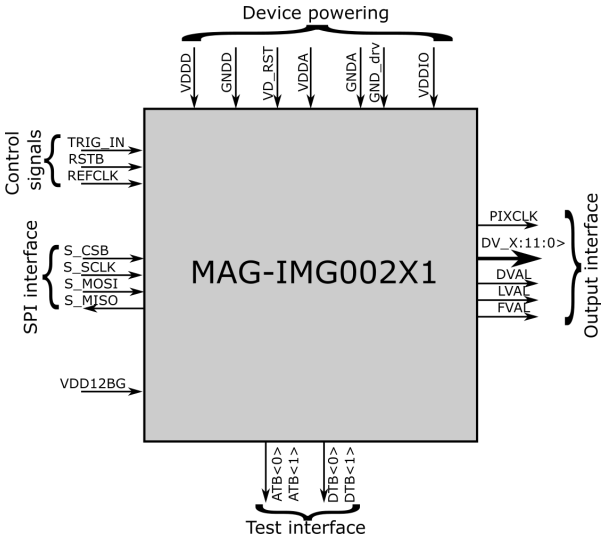

Figure 2: Simplified connection diagram

Preliminary

Copyright © Magics Technologies NV

A simplified connection diagram is depicted in Figure 2. The imager needs to be supplied with both a 1.8V (VDDD) and a 3.3V (VDDA/VDDIO) supply voltage. The SPI interface is present to allow communication to the device, while an output interface is present to get out the raw data images. A reference clock input, together with a reset and trigger pin, complete the signals required to operate the device.

5. Block diagram

The block diagram of the imager's internals is depicted in Figure 3. The core of the device is the pixel array, together with the peripherals to drive and read the pixels. The latter circuitry includes the column load, sample and hold and the column ADC. SRAM is implemented to store the data to be sent out through the parallel output bus as raw image data.

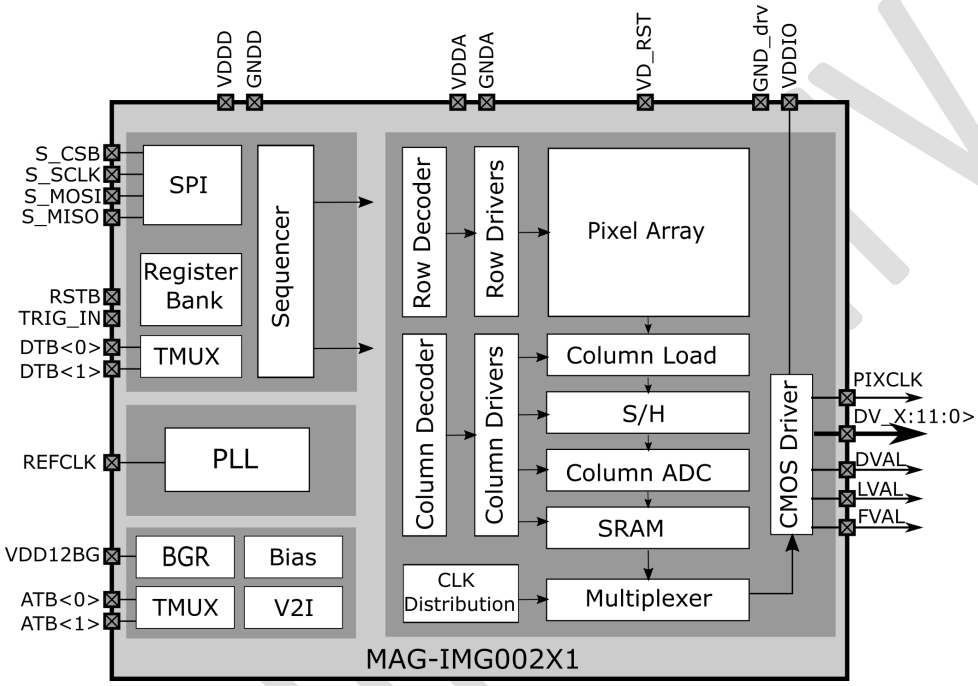

Figure 3: Imager block diagram

The signals that are required to select the right column and row to be read, are generated by the sequencer in the digital. This block also generates the signals that are used to drive the reset and selection signals of the pixels, and the signals that are used for the sample and hold and the ADC. The sequencer defines the biggest part of the digital circuitry on chip. Next to the sequencer, the digital contains an SPI interface together with a register map which is accessible through this SPI interface. It allows the user to configure the device in the operating mode wanted, including the implemented features. The digital operates at the digital supply voltage VDDD of 1.8V.

Next to the digital, the imager contains analog circuitry to generate on-chip reference currents and voltages, and reference clocks as well. The chip contains a PLL which generates the clock for the digital, as well as the clocks required to drive the ADCs, the output MUX and the output interface. The PLL requires an external clock reference of 20 Mhz.

Preliminary

6. Pin configurations and functions

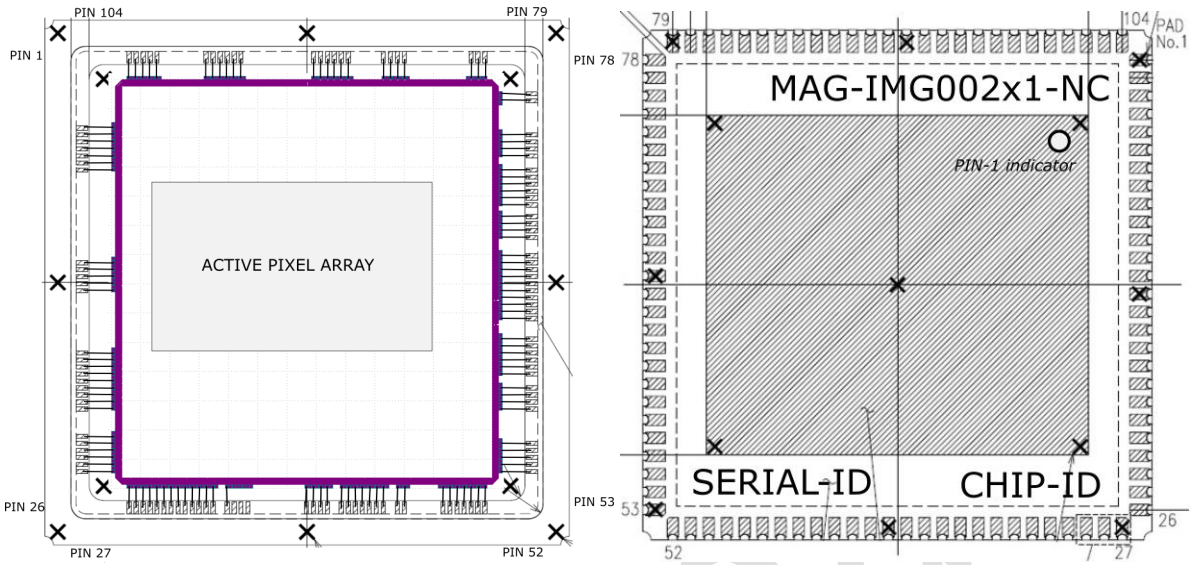

Figure 4: CLCC-104 Package pinout numbering (front-side view on the left & back-side view on the right). There is a thermal pad present at the backside of the package. Note that the PIN-1 is indicated at the backside by a DOT laser-marked in the thermal PAD. At the top-side the thermal pad the product code is laser marked, and at the bottom side of the thermal pad the SERIAL-ID and CHIP-ID are laser-marked.

Table 1 Device pin list

PIN	NAME	I/O	logic	V domain	Description
1	VDDD	Supply	na	1.8	Digital 1.8V supply voltage pin
2	GNDD	Supply	na	na	Digital ground
3	VDDD	Supply	na	1.8	Digital 1.8V supply voltage pin
4	GNDD	Supply	na	na	Digital ground
5	GNDA	Supply	na	na	Analog ground
6	VD_RST	Supply	na	3.3	Pixel reset voltage
7	GNDA	Supply	na	na	Analog ground
8	GNDD	Supply	na	na	Digital ground
9	VDDA	Supply	na	3.3	Analog 3.3V supply voltage pin
10	GNDA	Supply	na	na	Analog ground
11	ATB<0>	I/O	na	3.3	Analog test bus pin
12	ATB<1>	I/O	na	3.3	Analog test bus pin
13	VDDD	Supply	na	1.8	Digital 1.8V supply voltage pin
14	VDDD	Supply	na	1.8	Digital 1.8V supply voltage pin
15	GNDD	Supply	na	na	Digital ground
16	GNDD	Supply	na	na	Digital ground
17	DTB<0>	O	na	1.8	Digital test output (CMOS output driver)
18	DTB<1>	O	na	1.8	Digital test output (CMOS output driver)
19	GNDD	Supply	na	na	Digital ground
20	GNDD	Supply	na	na	Digital ground
21	VDDD	Supply	na	1.8	Digital 1.8V supply voltage pin
22	VDDD	Supply	na	1.8	Digital 1.8V supply voltage pin
23	GNDD	Supply	na	na	Digital ground

Preliminary

MAG-IMG002X1-NC – Full HD CMOS rad-hard image sensor

PIN	NAME	I/O	logic	V domain	Description
24	TRIG_IN	I	Active high	3.3	Input trigger pin
25	VDDD	Supply	na	1.8	Digital 1.8V supply voltage pin
26	VDDD	Supply	na	1.8	Digital 1.8V supply voltage pin
27	GNDD	Supply	na	na	Digital ground
28	VDDD	Supply	na	1.8	Digital 1.8V supply voltage pin
29	VDD12BG	I	na	3.3	1.2V bandgap voltage input (as backup mode) – should be grounded in normal operation.
30	GNDD	Supply	na	na	Digital ground
31	VDDD	Supply	na	1.8	Digital 1.8V supply voltage pin
32	VDDD	Supply	na	1.8	Digital 1.8V supply voltage pin
33	REFCLK	I	na	3.3	Reference clock input
34	VDDA	Supply	na	3.3	Analog 3.3V supply voltage pin (connected to PLL block)
35	GNDD	Supply	na	na	Digital ground
36	GNDD	Supply	na	na	Digital ground
37	VDDD	Supply	na	1.8	Digital 1.8V supply voltage pin
38	GNDD	Supply	na	na	Digital ground
39	VDDD	Supply	na	1.8	Digital 1.8V supply voltage pin
40	GNDD	Supply	na	na	Digital ground
41	S_CSB	I	Active low	3.3	SPI chip select pin
42	S_SCLK	I	Active high	3.3	SPI clock input
43	S_MOSI	I	Active high	3.3	SPI Master Out Slave In
44	S_MISO	O	na	3.3	SPI Master In Slave Out
45	RSTB	I	Active low	3.3	Reset input
46	GNDD	Supply	na	na	Digital ground
47	VDDD	Supply	na	1.8	Digital 1.8V supply voltage pin
48	VDDD	Supply	na	1.8	Digital 1.8V supply voltage pin
49	VDDD	Supply	na	1.8	Digital 1.8V supply voltage pin
50	DV_X<0>	O	na	3.3	Image sensor output data
51	VDDIO	Supply	na	3.3	3.3V IO supply voltage
52	DV_X<1>	O	na	3.3	Image sensor output data
53	DV_X<2>	O	na	3.3	Image sensor output data
54	DV_X<3>	O	na	3.3	Image sensor output data
55	VDDIO	Supply	na	3.3	3.3V IO supply voltage
56	VDDD	Supply	na	1.8	Digital 1.8V supply voltage pin
57	VDDD	Supply	na	1.8	Digital 1.8V supply voltage pin
58	VDDIO	Supply	na	3.3	3.3V IO supply voltage
59	DV_X<4>	O	na	3.3	Image sensor output data
60	DV_X<5>	O	na	3.3	Image sensor output data
61	GNDA	Supply	na	na	Analog ground
62	GND_drvr	Supply	na	na	Driver ground
63	VDDA	Supply	na	3.3	Analog 3.3V supply voltage pin
64	VD_RST	Supply	na	3.3	Pixel reset voltage
65	VDDIO	Supply	na	3.3	3.3V IO supply voltage
66	VDDD	Supply	na	1.8	Digital 1.8V supply voltage pin
67	DV_X<6>	O	na	3.3	Image sensor output data
68	GNDD	Supply	na	na	Digital ground
69	DV_X<7>	O	na	3.3	Image sensor output data
70	VDDIO	Supply	na	3.3	3.3V IO supply voltage
71	GNDD	Supply	na	na	Digital ground
72	DV_X<8>	O	na	3.3	Image sensor output data
73	DV_X<9>	O	na	3.3	Image sensor output data
74	GNDD	Supply	na	na	Digital ground
75	VDDD	Supply	na	1.8	Digital 1.8V supply voltage pin
76	VDDD	Supply	na	1.8	Digital 1.8V supply voltage pin

Preliminary

Copyright © Magics Technologies NV

MAG-IMG002X1-NC – Full HD CMOS rad-hard image sensor

PIN	NAME	I/O	logic	V domain	Description
77	VDDIO	Supply	na	3.3	3.3V IO supply voltage
78	GNDD	Supply	na	na	Digital ground
79	GNDA	Supply	na	na	Analog ground
80	DV_X<10>	O	na	3.3	Image sensor output data
81	DV_X<11>	O	na	3.3	Image sensor output data
82	VDDIO	Supply	na	3.3	3.3V IO supply voltage
83	VDDIO	Supply	na	3.3	3.3V IO supply voltage
84	PIXCLK	O	na	3.3	Pixel clock output
85	DVAL	O	na	3.3	Data valid output
86	GNDD	Supply	na	na	Digital ground
87	GNDD	Supply	na	na	Digital ground
88	VDDIO	Supply	na	3.3	3.3V IO supply voltage
89	LVAL	O	na	3.3	Line valid output
90	FVAL	O	na	3.3	Frame valid output
91	GNDD	Supply	na	na	Digital ground
92	VDDD	Supply	na	1.8	Digital 1.8V supply voltage pin
93	GNDD	Supply	na	na	Digital ground
94	VDDD	Supply	na	1.8	Digital 1.8V supply voltage pin
95	GNDD	Supply	na	na	Digital ground
96	VDDD	Supply	na	1.8	Digital 1.8V supply voltage pin
97	GNDD	Supply	na	na	Digital ground
98	VDDD	Supply	na	1.8	Digital 1.8V supply voltage pin
99	GNDD	Supply	na	na	Digital ground
100	VDDD	Supply	na	1.8	Digital 1.8V supply voltage pin
101	VDDD	Supply	na	1.8	Digital 1.8V supply voltage pin
102	GNDD	Supply	na	na	Digital ground
103	GNDD	Supply	na	na	Digital ground
104	VDDD	Supply	na	1.8	Digital 1.8V supply voltage pin
TP	Thermal pad	Supply	na	na	To be connected to digital ground GNDD.

Preliminary

Copyright © Magics Technologies NV

7. Specifications

7.1 Absolute maximum ratings

Table 2: Absolute Maximum Ratings

name	Description	Min	Max	Unit
VDDD	1.8V supply	-0.3	2.4	V
VDDA, VDDIO, VD_RST	3.3V supplies	-0.3	4.6	V
VDD12BG	Maximum reference input voltage	-0.3	4.6	V
T_j	Junction temperature	-55	100	°C
$T_{storage}$	Storage temperature	0	50	°C
$H_{storage}$	Storage humidity		60	%

The absolute maximum ratings define the range in which the device can be used without damaging it. The performance is however not always guaranteed. For guaranteed performance, we refer to the next section in which the recommended operating conditions are described.

7.2 Recommended operating conditions

Table 3: Recommended Operating Conditions

Description	Min	Typ	Max	Unit
Supplies				
External 1.8V digital power supply voltage – VDDD	1.62	1.8	1.98	V
External 3.3V analog power supply voltage – VDDA	3.135	3.3	3.63	V
External 3.3V IO power supply voltage – VDDIO	3.135	3.3	3.63	V
External VD_RST – pixel reset voltage	2.5	3.3	3.3	V
Supply ramp-up time – VDDD/VDDA/VDDIO	100	-	-	us
Supply ramp up order		see section 8.2.1		
(SPI) Signal interfacing				V
Digital input signals – RSTB, TRIG_IN, S_CSB, S_MOSI	0	-	3.63	V
Digital output load capacitance (S_MISO)	-	-	20	pF
Video output interface				
Digital output interface load capacitance (DV_X, LVAL, FVAL, DVAL, PIXCLK)			20	pF
Clock interfacing				
External clock input – REFCLK	10	20	40	MHz
Serial interface clock – S_SCLK	-	10	20	MHz
Temperature				
Operation temperature (junction temperature) – pre-irradiation	0	25	85	°C
Radiation				
TID	1	-	-	MGy (Si)
SEE	62.5	-	-	MeV.cm2/mg LET
ESD robustness				
ESD – HBM	2	-	-	kV

For more information on recommended operating conditions in a radiation environment, please refer to section 9.4.

Preliminary

7.3 Electrical characteristics

Table 4: Electrical Characteristics

Label	Description	Test conditions	Min	Typ	Max	Unit
Current consumption → more details in Table 5						
I_VDDD	Current consumption on VDDD in active mode	FHD25 10-bit mode		205	1000[a]	mA
I_VDDA	Current consumption on VDDA in active mode	FHD25 10-bit mode		Combined:		mA
I_VDDIO	Current consumption on VDDIO in active mode	FHD25 10-bit mode		124		mA
I_VD_RST	Current consumption on VD_RST in active mode	FHD25 10-bit mode				mA
Clocking and control signals						
REFCLK	External clock reference		10	20	40	MHz
TRIG_in_l	Input threshold – low		0.74	1.07	1.4	V
TRIG_in_h	Input threshold – high		1.56	1.89	2.39	V
TRIG_in_hyst	Input hysteresis		0.66	0.82	1.15	V
RSTB_th_lvl	Input threshold (no hysteresis)			1.65		V
SPI interface						
SPI_clk	SPI master clock speed				20	MHz
SPI_out	Output levels of MISO (no load)		2.97	3.3	3.63	V
SPI_in_l	Input threshold – low		0.74	1.07	1.4	V
SPI_in_h	Input threshold – high		1.56	1.89	2.39	V
SPI_in_hyst	Input hysteresis		0.66	0.82	1.15	V
Digital video output interface						
V_{OH}	High level output voltage (no resistive load)		2.97	VDDIO	3.63	V
V_{OL}	Low level output voltage (no resistive load)			0 (gnd)		V
PIXCLK_speed	Speed of the pixel output clock		50		100	MHz
DV_X_speed	Speed of the data output lines		-		50	MHz
Analog signals						
$V_{vdd12bg}$	Bandgap back-up voltage (pin VDD12BG) – high-impedance input		1.14	1.2	1.26	V

[a] *this high current consumption on the VDDD (1.8V) supply is only present at start-up or after a reset and is not applicable if a supported mode is loaded into the register map (see section 9.5).*

The next table gives an overview of the typical power consumption for different resolutions and frame rate modes. These modes are linked to the supported modes as defined in section 9.5.

Important note: after a reset (or at start-up) – the default register map is loaded. In this default mode, there is a high current consumption on the 1.8V supply of close to 1A of current. Therefore it is always advised to load a defined register map for one of the modes supported, as is detailed in section 9.5.

Table 5: Power consumption for different resolutions

Resolution	Frame Rate (fps)	Pixel size (bit)	1.8 Supply Power (W)*	3.3 Supply Power (W)	Total Power* (W)
HD	5	10	0.27	0.09	0.37
HD	40	10	0.33	0.37	0.71
FHD	10	10	0.31	0.19	0.50
FHD	25	10	0.37	0.41	0.78
FHD	30	10	0.38	0.40	0.79
VGA	5	10	0.27	0.07	0.35
VGA	50	10	0.29	0.19	0.48
VGA	100	10	0.32	0.29	0.61

**Depends on the scene, numbers reported for white scene*

Preliminary

7.4 Electro-optical characteristics

Table 6: Sensor Electro-optical Characteristics

Description	Value	Remark
Pixels and performance		
Effective number of pixel	1920 (H) x 1080 (V)	
Pixel size	5um x 5um	
Number of black rows	64	32 at the top; 32 at the bottom
Shutter type	Rolling shutter	
Full well charge	94000 e-	*Preliminary measurement results pre-irradiation*
Conversion gain	0.01 mV/eV	*Preliminary measurement results pre-irradiation*
Responsivity	0.009 DN/e-	*Preliminary measurement results pre-irradiation*
Temporal noise	66 e-	*Preliminary measurement results pre-irradiation*
Dynamic range	62 dB	*Preliminary measurement results pre-irradiation*
SNR_{MAX}	49.5 dB	*Preliminary measurement results pre-irradiation*
Dark current (DC)	0.05 fA	*Preliminary measurement results pre-irradiation*
Dark current non uniformity (DCNU)	42.8 e-/s	*Preliminary measurement results pre-irradiation*
Dark signal non uniformity (DSNU)	587.2 e-	*Preliminary measurement results pre-irradiation*
Photo response non uniformity (PRNU)	< tba % RMS	*(to be added once we have characterized it)*
Color filters	BayerRG (Bayer RGGB)	In the case of the color version
Programmable features	Sensor parameters	Exposure time, sub-sampling, X-Y mirroring, ADC resolution
ADC resolution	10 and 12 bit	selectable
Interface	10/12b parallel output	CMOS push-pull drivers
Cover glass lid	Corning 7980 0F	Type = fused silica with double-side AR coating. Ravg < 1.75% @ 300-800 nm, AOI 0deg

Preliminary

Copyright © Magics Technologies NV

8. Functional description

The MAG-IMG002X1-NC is a radiation-hardened Full HD CMOS digital image sensor with an active-pixel array of 1920Hx1080V. It can come in both a monochrome (MAG-IMG00241-NC) as in a color version (MAG-IMG00251-NC). Both versions implement rolling shutter readout strategy.

The image sensor outputs raw sensor image data through a parallel CMOS output interface (3v3), which is configurable to output 10 or 12 bit pixel data. Synchronization signals such as the pixel clock (PIXCLK), data valid (DVAL), line valid (LVAL) and frame valid (FVAL) are also sent along through the same output interface, which can run up to 100 MHz maximally. The imager can be configured to capture data in trigger mode, in which it can capture one image or multiple images (burst mode), or in continuous mode (video mode). It also includes features such as windowing, image mirroring and sub-sampling to ease the integration at the customer.

All the above configurations can be programmed through a SPI interface which can run up to 20 MHz.

8.1 Sensor architecture

8.1.1 Pixel Array Structure

Figure 5 shows the pixel array of the image sensor. The pixel core of the imager contains the pixel array along with its drivers and encoders. The pixel array is 1920x1080 pixels as active area (= Full HD), and in addition there are 64 rows of black pixels to calibrate the black color (32 at the top and 32 at the bottom). These pixels are optically black as they are shielded by on-chip metal. Additional transparent dummy pixels (8 rows and 8 columns) are added to improve image uniformity within the active area. A guard ring/barrier concludes the pixel array.

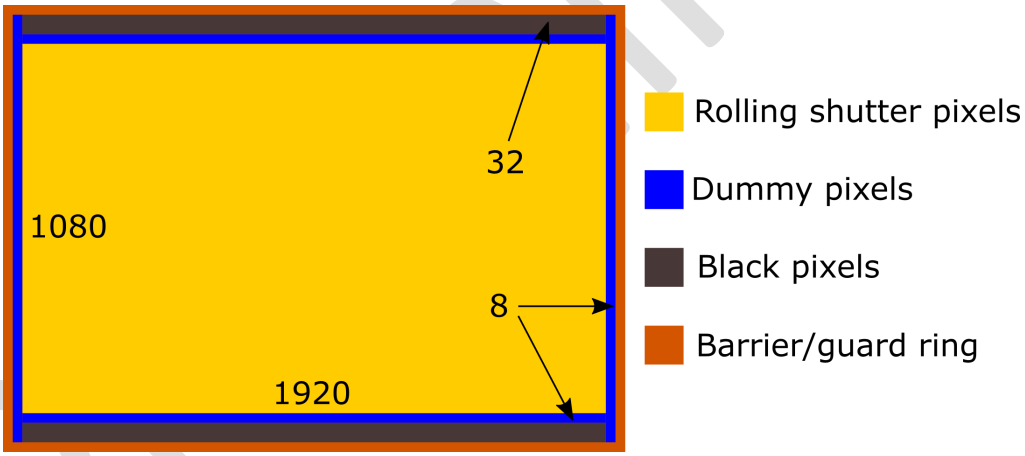

Figure 5: Pixel Array core

8.1.2 Monochrome vs. color

To improve the efficiency of the pixel, there are micro-lenses (MLA) deposited on each pixel, centered around the photodiode. These micro-lenses are present on both the monochrome as on the color version. The difference between the monochrome version and the color version is the addition of a color filter array (CFA) in the case of the color sensor. This CFA is there to filter the spectrum for each pixel in order to be able to create a color image. The pattern that is used is the well-known Bayer pattern, in particular the BayerRG (RGGB). The array is pictured in Figure 6.

8.1.3 Default Readout Order

By convention, the sensor core pixel array is shown with the first addressable (logical) pixel (0,0) in the left bottom corner (see Figure 6). In the case of the color version (MAG-IMG00251-NC), red is the first pixel at (0,0), as the used

Preliminary

Bayer pattern is RGGB. This reflects the actual layout of the array on the die. Note that the (0,0) pixel is in reality a black pixel at the bottom left of the array. See Figure 5 in which both the core pixels and the black pixels are addressable.

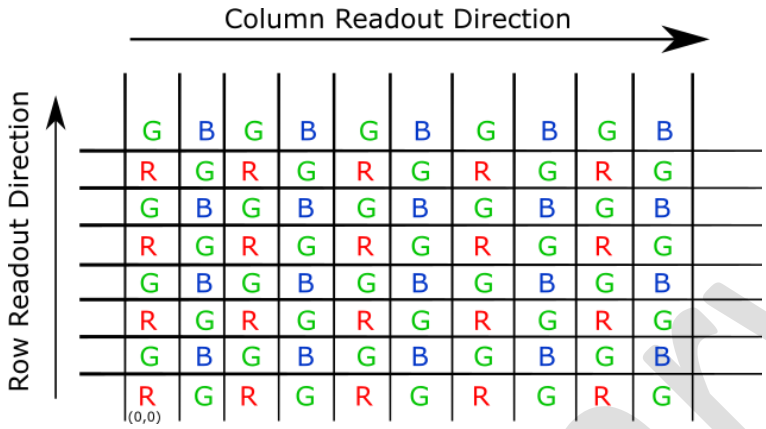

Figure 6: Pixel color pattern detail

8.1.4 Output data interface

8.1.4.1 Output Data Format

The MAG-IMG002X1-NC image data is progressively scanned. Valid image data is surrounded by horizontal and vertical blanking (see Figure 7). Line valid (LVAL) is high during the shaded region of Figure 7.

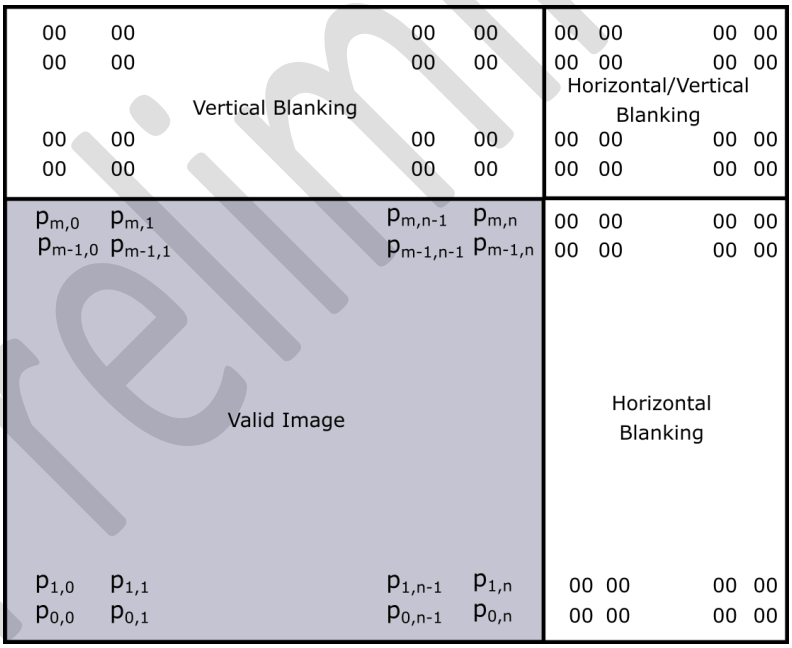

Figure 7: Spatial Illustration of Image Readout

8.1.4.2 Parallel Output Data Timing

The output images are divided into frames, which are further divided into lines. By default, in HD mode without the black pixels enabled, the sensor produces 720 rows of 1280 columns each. The frame valid (FVAL) and line valid (LVAL) signals indicate the boundaries between frames and lines, respectively. PIXCLK can be used as a clock to latch the data. For each PIXCLK cycle, with respect to the falling edge, one 10/12−bit pixel data outputs on the DV_X pins. When both

Preliminary

FVAL and LVAL are asserted, the pixel is valid. PIXCLK cycles that occur when FVAL is de−asserted are called vertical blanking. PIXCLK cycles that occur when only LVAL is de−asserted are called horizontal blanking.

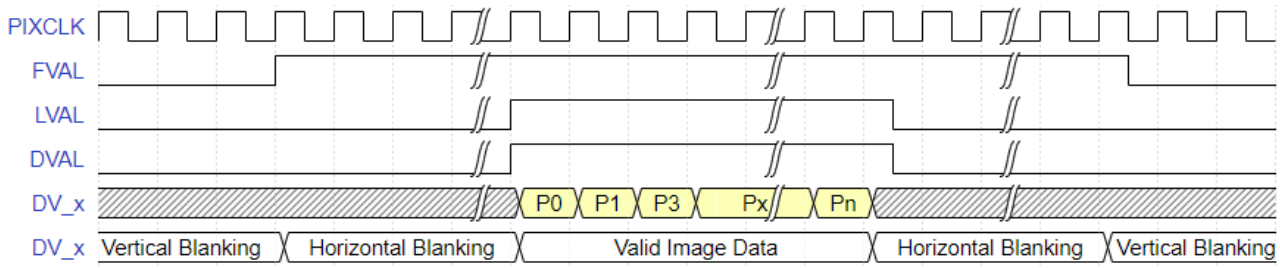

Figure 8: Pixel Output Timing

By default, The output data is synchronized to the rising edge of the PIXCLK, however this can be changed to the falling edge of the PIXCLK by writing register '*AnalogTrimming_pclk_edge'* to 3.

8.1.4.3 LVAL and FVAL

The timing of the FVAL and LVAL outputs is closely related to the row time and the frame time. FVAL will be asserted for an integral number of row times, which will normally be equal to the height of the output image. LVAL will be asserted during the valid pixels of each row. LVAL will only be asserted if FVAL is asserted as shown in Figure 9.

Figure 9: Line valid signal Frame time

The pixel clock (PIXCLK) represents the time needed to sample 1 pixel from the array. The sensor outputs data at the maximum rate of 1 pixel per PIXCLK. One row time (t_{row}) is the period from the first pixel output in a row to the first pixel output in the next row. The row time and frame time are defined in section 8.3.

Preliminary

8.2 Operating the sensor

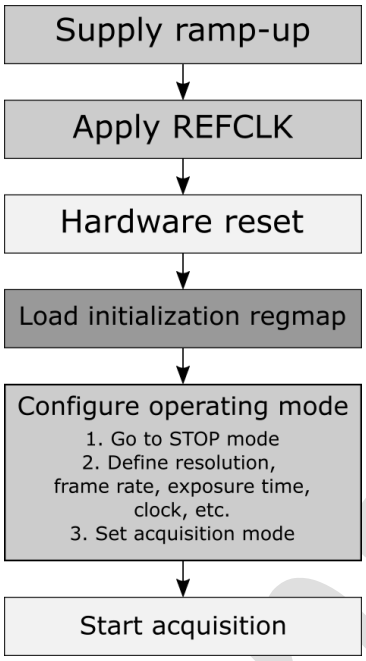

Figure 10: Imager sensor configuration flow

To initialize and operate the sensor, it is recommended to follow the flow as described in Figure 10. The supply ramp-up and reference clock booting is described in section 8.2.1. The reset sequence and the loading of the initialization register map are described in sections 8.2.2 and 8.2.3, respectively. Next, before making any changes to the configuration settings of the imager (e.g. resolution, frame rate, etc.), it is important to put the operating mode of the sensor to the STOP mode first. The different operating modes are described in section 8.2.4. Once the device is in STOP mode, the sensor can be configured to the user's needs. How to set the resolution, frame rate, exposure time, etc. is described in section 8.3. Once the device is configured according to the user's needs, the acquisition can start in triggered mode or continuous mode.

8.2.1 Supplies and start-up sequence

Before and during this start-up procedure, all clocks and inputs signals should be connected to ground. Supply voltages, ramp-up time and clock frequencies need to be in line with Table 3 to guarantee specs. The sensor should be powered in the following order to guarantee proper start-up:

1. Supply 3V3 power.
    a. If the different 3V3 supplies would be isolated, please ramp up in the following order:
        i. Supply VDDIO power
        ii. Supply VDDA power
        iii. Supply VD_RST
2. Supply 1V8 (VDDD) power
3. External reference 1.2V can be applied through VDD12BG pin (Optional)
4. Apply reference clock through REFCLK pin.

8.2.2 Reset sequence

After the start-up sequence, the sensor needs to be reset through the RSTB pin. After reset, the sensor is ready for SPI communication if needed. If the applied reference clock is 20 MHz, no further steps are needed to set internal dividers.

If the applied refence clock is different, register '*AnalogTrimming_idiv_ctrl*' needs to be set according to the register map. This will guarantee proper PLL operation (see section 8.3.8 for more information).

Preliminary

Note that there are also software resets implemented, i.e. one dedicated to the register map and one dedicated to the digital logic. The software reset for the register map is active high and can be triggered by writing a '1' in the register '*ManualSettings_software_rst*'. The software reset for the digital logic itself is active low and can be triggered by writing a '0' in the register '*ManualSettings_software_reset_asic*'.

8.2.3 Load initialization register map

The defaults of the register map are good as defaults after the start-up. If in the future this would change, Magics will share with the customer a new default register map to be loaded during the initialization process.

8.2.4 Operating modes

The device can be in three different modes of operation, defined by '*AcquisitionCommand_Value*':

- STOP mode: *AcquisitionCommand_Value = 1*
- CONTINUOUS mode: *AcquisitionCommand_Value = 8*
- MULTIFRAME mode: *AcquisitionCommand_Value = 9*

8.2.4.1 STOP mode

To enter this mode, '*AcquisitionCommand_Value'* needs to be set to 1.

The imager is not grabbing any images in this state and can be considered as an idle state. Note that for most configuration settings (except exposure times settings), it is mandatory to return to this mode before making changes.

8.2.4.2 CONTINUOUS mode

To enter this mode, '*AcquisitionCommand_Value'* needs to be set to 8.

This is a "video" mode that will continue to grab frames as long as '*AcquisitionCommand_Value'* is set in this state. It will stop doing this when STOP (=1) is written into the register. This mode is the default start-up mode after booting the imager. So, it will start sending out images after correct initialization. Before you make any changes to the imager configuration, it is mandatory to go to the STOP mode first.

8.2.4.3 MULTIFRAME mode

To enter this mode, '*AcquisitionCommand_Value'* needs to be set to 9.

A limited number of frames will be grabbed when '*AcquisitionCommand_Value'* is set to MULTIFRAME (9). The imager will reset the '*AcquisitionCommand_Value'* register back itself to STOP (1) when this sequence has been grabbed. The number of frames that will be grabbed can be defined in the '*AcquisitionFrameCount_Value'* register.

While the STOP and CONTINUOUS mode are self-explanatory and do not require additional information, the MULTIFRAME is however a bit more complex as it can be triggered in different ways, i.e. an auto trigger mode and a triggered trigger mode.

- Trigger mode auto (AUTO_TRIG): *TriggerMode_Value = 0*

In this trigger mode the register '*TriggerMode_Value'* is set to 0, which means that when '*AcquisitionCommand_Value'* is set to MULTIFRAME mode (setting 9), it will automatically start grabbing a number of images as defined in '*AcquisitionFrameCount_Value'.* After grabbing these images, the imager will return to the STOP state. A new frame capture can be started by putting the device again in the MULTIFRAME mode.

- Trigger mode trigger (WAIT_TRIG): *TriggerMode_Value = 1*

In this trigger mode the register '*TriggerMode_Value'* is set to 1, which means that when '*AcquisitionCommand_Value'* is set to MULTIFRAME mode (setting 9) it will not automatically start grabbing a number of images, but it will await an external trigger. This external trigger can be given by pin trigger (TRIG_IN pin), or by a software trigger (register trigger), as should be defined through the '*TriggerSource_Value'* register bit. Also note that the number of frames to be captured is given by the register '*TriggerAdditionalParameter_Value'*, which is different from the AUTO_TRIG mode.

Preliminary

How to select these two WAIT_TRIG trigger modes is explained below:

Table 7: Trigger source options in WAIT_TRIG mode

Setting	PIN trigger	Software trigger
AcquisitionCommand_Value	MULTIFRAME = 9	MULTIFRAME = 9
TriggerMode_Value	WAIT_TRIG = 1	WAIT_TRIG = 1
TriggerSource_Value	120	64
TriggerAdditionalParameter_Value	> 0	> 0
TRIGGER	Rising edge on TRIG_PIN	Write 1 to *SoftwareTrigger_Value*

After grabbing these images, the imager will return to the STOP state. A new frame capture can be started by putting the device again in the MULTIFRAME mode after which you can give the hardware of software trigger.

8.3 Sensor configuration and features

In the next subsections the different sensor configuration settings and additional features are described. These configurations and features are required to put the sensor in one of its supported modes, as are described in section 9.5.

8.3.1 Image windowing

The maximum sensor resolution is Full HD (1920x1080). However, it can be programmed for lower resolution, for windowing and for usage of higher frame rates.

This can be achieved by choosing the image width through '*ImageSize_Width*' register and image height through '*ImageSize_Height*' register. The offsets in x and y directions can be specified through '*ImageSize_OffsetX*' and '*ImageSize_OffsetY*' registers, respectively. In this way any part on the Full-HD array can be selected to be read. In the case of the color sensor, it is important to take into account to select even numbers to make sure that the color information due to the Bayer pattern is still in place. The black pixels/rows can be used in combination with this feature as well, but also note that the black rows (see Figure 5) are included in the full addressable range! The first addressable row is a black row. As a result, in Full HD mode, the '*ImageSize_OffsetY* ' needs to be set to 32. This is independent from the fact if the black rows are enabled or not (see section 8.3.2).

A few examples for windowing modes with corresponding register settings are given in the table below. Note that the default value at start-up is the HD mode.

Table 8: Image windowing control for specific modes.

Register control	VGA	HD	FHD
ImageSize_Height	480	720	1080
ImageSize_Width	640	1280	1920
ImageSize_OffsetX	640	320	0
ImageSize_OffsetY	332	212	32

8.3.2 Black pixels

The sensor contains two sets of black rows, i.e. 32 rows at top and 32 rows at the bottom (see Figure 5). These rows are addressable and can be read by the user. Since they are black/covered pixels, they could be used for dynamic/live black-level calibration/compensation. To allow the use of black rows, the register bit '*ManualSettings_black_row*' needs to

Preliminary

be enabled. When enabled, the imager outputs the 64 black rows in addition to the image sensor data. This means that there are 64 lines added to the amount of lines that are selected by the '*ImageSize_Height*' setting.

! Important note: please discard the first 10 outer rows of the black rows on both sides of the array, if used for black-level calibration/compensation. This is because these pixels could behave differently as a function of total ionization dose.

8.3.3 Exposure time

The exposure time of the frame can be programmed through the '*ExposureTime_Value*' register. This exposure time is expressed in microseconds. The minimum and maximum exposure times that can be achieved is governed by the following equations:

$$Exposure\ Time_{min} = \frac{1}{Frame\ Rate * No.of\ Rows}$$

$$Exposure\ Time_{max} = \frac{1}{Frame\ Rate}$$

The frame rate can be specified in the '*AcquisitionFrameRate_Value*' register. The default value for '*ExposureTime_Value*' at start-up is 10000 us (=10ms). Note that '*ExposureTime_Value*' is the only register where a change is acceptable when the '*AcquisitionCommand_Value*' is not in STOP mode.

8.3.4 Frame time

Next to the exposure time setting, also the frame time is configurable through '*AcquisitionFrameRate_Value*' in the register map. This setting allows to change the frame rate, expressed in frames per second (fps). Note that there is an upper value for this frame rate, and this is dependent on the image windowing setting (see section 8.3.1). This upper limit for the frame rate is given in section 0.

8.3.5 Pixel resolution

The on-chip ADC to convert the pixel values can be put in two modes, i.e. 10 bits and 12 bits mode. The selection is done through the GenICam register '*PixelSize_Value*'. Note that there is a tradeoff between the image window, the frame time and the pixel resolution, as it is limited by the data throughput requirements. Some default setups are given in section 0.

8.3.6 Image mirroring

The frame can be mirrored/flipped in X and/or Y direction, this can be done using '*ReverseX_Value*' and '*ReverseY_Value*' respectively. Note that flipping in the Y direction reverses the exposure order of the rows (default from bottom to top) while flipping in X direction changes only the readout order. This feature can be helpful when mirrors are used in a camera setup.

Note that there is an errata on this feature, for which it is referred to section 14.1.

8.3.7 Image sub-sampling

Sub-sampling or decimation is a technique to reduce the number of data to be send from the image sensor to the output interface by skipping rows and columns. In comparison with image windowing, with sub-sampling the area of the picture taken stays the same, but the effective resolution has reduced. The control is set by registers in the register map. The registers *'DecimationHorizontal_Value'* and *'DecimationVertical_Value'* control the sub-sampling in the X and Y direction, respectively. In the case of a sub-sampling of 2, 1 pixel out of 2 is transmitted. In the case of a sub-sampling 4, it will be 1 pixel out of 4, and so on.

However, there is a difference between a color and a monochrome sub-sampling. This is illustrated in the following figure, where a subsampling of 2 is used in the x-direction and a subsampling of 2 in the y-direction too.

Preliminary

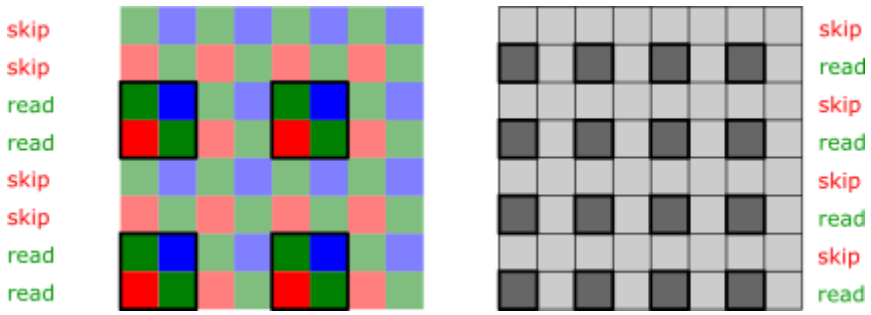

Figure 11: Sub-sampling in case of a colored or monochrome sensor.

An important remark is that the MAG-IMG002X1 product is only supporting the sub-sampling in the color mode! As such a monochrome sensor will still perform a color-mode subsampling.

8.3.8 Clocking settings

The default reference clock applied to REFCLK pin should be 20 MHz as this will allow the PLL to work at the optimum frequency of 400 MHz. If a different reference clock is available at the system, the input divider of the PLL needs to be reprogrammed through *'AnalogTrimming_idiv_ctrl'* to match the new clock according to Table 9.

Note that when the MAG-IMG is used in combination with MAG-CXP00002-NP, an accurate reference clock of 20MHz can be supplied by the MAG-CXP00002-NP chip.

Table 9: input reference clk frequency settings

AnalogTrimming_idiv_ctrl	Reference Clock Frequency (MHz)
0	10
1	20
2	30
3	40

The ADC counter clock can be programmed through the '*AnalogTrimming_cntr_clk_ctrl*' register. The default counter clock is 200MHz (setting 0).

Table 10: Counter clk frequency settings

AnalogTrimming_cntr_clk_ctrl	Counter Clock Frequency (MHz)
0	200
1	100
2	66.66
3	50
4	40
5	33.33
6	28.57
7	25

Preliminary

The required ADC clock is dependent on the resolution, the number of bits and the frame rate. The minimum required counter clock can be calculated as follows:

$$Counter_{clk} > \frac{2^{No.of\ bits-1} * 1.5 * 10^6}{(\frac{10^6}{No.of\ Rows * Frame\ Rate} - 2.6)}$$

The output data clock can be programmed through the '*AnalogTrimming_sdr_clk_ctrl*' register. The default data clock is 100MHz (setting 1).

Table 11: Output data clk frequency settings

AnalogTrimming_sdr_clk_ctrl	Counter Clock Frequency (MHz)
0	200
1	100
2	66.66
3	50
4	40
5	33.33
6	28.57
7	25

The required SDR clock is dependent on the resolution and frame rate. The minimum required SDR clock can be calculated as follows:

$$SDR_{clk} > 2 * Frame\ Rate * \left(16 + \frac{No.of\ columns}{2}\right) * No.of\ Rows$$

8.3.9 Test pattern generator

An on-chip test pattern generator is implemented so that the device can create known images, independent of the scene. The test pattern generation module will generate test images which are defined in the GenICam standard, in addition to some vendor-specific images. The images are under the control of the '*TestPattern_Value*' register of GenICam. The available test patterns are listed in the table below.

Table 12: Test patterns.

TestPattern_Value	Image type
0	No test image, image from the pixel array
1	Black test image
2	White test image
3	Grey55 test image
4	GreyAA test image
16	GrayHorizontalRamp
17	GrayVerticalRamp
48	ColorBar
49	GreyScaleChart

Preliminary

120	VendorSpecific0 test image
121	VendorSpecific1 test image
122	VendorSpecific2 test image
123	VendorSpecific3 test image
124	VendorSpecific4 test image
125	VendorSpecific5 test image

The test patterns from the standard can be found back in the standard, and their names are in principle self-descriptive.

For the VendorSpecificx patterns, an overview can be found below:

- **VendorSpecific0**: consists of 6 regions. The top starts with white (w) followed with black (b). This is followed by "wbwb".
- **VendorSpecific1**: consists of 6 regions. The top starts with black, followed by "wbwbw".
- **VendorSpecific2**: consists of 8 regions. The top starts with black followed by "wbwbwbw".
- **VendorSpecific3**: consists of 8 regions. The top starts with black followed by 6 gray values with top being most black-like and bottom being most white-like. The bottom most region is white.
- **VendorSpecific4**: starts with black and switches between black and white every two pixels.
- **VendorSpecific5**: test image is a running counter. This is a test image which is showing the number of the frame. As such it is a moving image.

In addition to the above-mentioned patterns, some other register controls are also interesting for manipulating the test images. The GenICam-compliant register entries which have effect on the generated test image are listed in Table 13.

Table 13: GenICam register controls used in the test pattern generator.

Register	Image type
TestPattern_Value	See previous table
select_endian	MSB/LSB bit order swap
test_pattern_rst_cnt	Reset of the running counter in the test image
ReverseX_Value	Image reversing in the X direction.
ReverseY_Value	Image reversing in the X direction.
col_mono_override_value	Color/Monochrome selection register and register/pin selection enable
PixelSize_Value	10 or 12 bits pixels
ImageSize_Width	Image width register
ImageSize_Height	Image width register

Preliminary

8.4 SPI interface and programming

A Serial Peripheral interface (SPI) is provided via which MAG-IMG002X1 can be fully configured using the SPI protocol, at a maximum clock frequency of 20MHz (typical is 10 MHz). The SPI interface is configured as a slave and the interface uses clock polarity 0 and clock phase 0, as shown in Figure 12. Both master and slave update data on the falling clock edge, while they both read data on the rising edge. The reset and chip select signals are both asynchronous active low signals. A SPI command is 64 bits in total and consists of the targeted memory address (31-bit), a read ('1') or write ('0') selection bit, and the actual 32-bit data transfer, as shown in Figure 12.

Programming the image sensor is done by writing the appropriate values to the on-board configuration registers. In section 12, more information can be found related to the (configuration) registers.

Note that the MISO pin of the SPI slave interface does not have a tri-state mode! This means that the driver is always on. As a result this SPI slave interface cannot be used in parallel with other SPI slave interfaces.

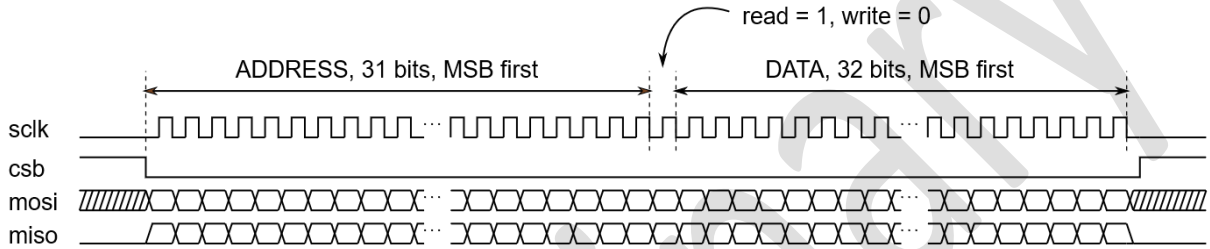

Figure 12 SPI read/write timing

Preliminary

9. Typical application

9.1 Application diagram

The basic circuit diagram of the MAG-IMG002X1 with a generic serializer is shown in Figure 13. Five different supply domains are to be powered for the imager to work properly. One of these domains requires a 1.8V supply while the others all require 3.3V supplies. These 3.3V domains can be connected to a single supply when proper decoupling is implemented. Each domain has a proposal for decoupling capacitors with their values.

For connecting the imager to a serializer or controller, three different buses are required and are listed next:

- The sensor output data bus (PIXCLK, DV_X, DVAL, LVAL, FVAL) holds all the sensor data and can be routed directly to a serializer like the MAG-CXP00002. This bus must be routed with high care due to the 100 MHz CMOS signals present on it. Due to the signal frequency, the track lengths should be matched with a max tolerance of 15mm.
- The SPI bus (S_CSB, S_SCLK, S_MOSI, S_MISO) is used to configure the imager from a serializer or controller. This bus acts a normal SPI bus and can be connected to any bus with the right frequency, bus timings and voltages.
- The control bus (TRIG_IN, RSTB, REFCLK) holds all the signals needed to control and run the imager:
  - TRIG_IN: The input that triggers a single image capture or burst capture. This pin can be connected to GND when not used.
  - RSTB: The active-low reset signal for the imager. A RC reset circuit can be used when no external reset is implemented.
  - REFCLK: The main reference clock of the imager. An oscillator with single-ended 3.3V rail-to-rail signal can be used for this purpose.

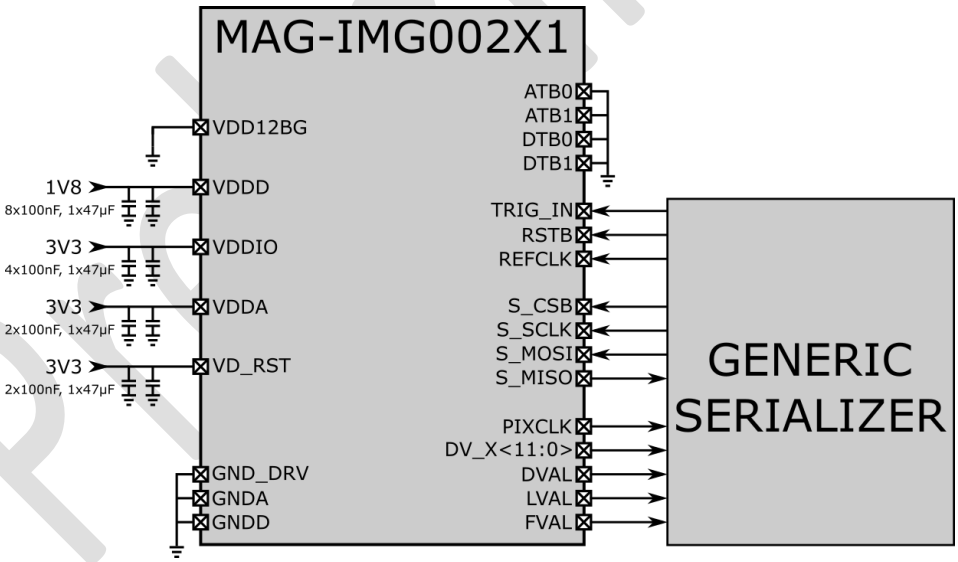

Figure 13: Typical application diagram with generic serializer

Preliminary

The intended use of the rad-hard image sensor is to use it in combination with the Magics radiation-hardened serializer MAG-CXP00002-NP. In this way a full radiation-hardened chip set solution is formed, which can capture images in a radiation harsh environment, while being able to send the imager data in a serialized way through a coax cable over lengths well above 150m. How to combine these two chips together is depicted in Figure 14. Note that the coaxial cable connection to the CXP host is not depicted in the figure.

The serializer contains a master SPI which is designed specifically to talk to the MAG-IMG002X1 imager. At the receiving side, there is a parallel input bus which captures the sensor data from the imager. Also for the control of the imager (i.e. TRIG_IN, RSTB and REFCLK pins), the serializer has dedicated output pins. The reference clock of 20 MHz is in this case supplied by the serializer, so there is no need for an external clock (the MAG-CXP requires an external crystal, though). During the initialization phase of the system, the correct reset signals are also given to the imager, while in hardware-triggered mode, the trigger can be given from the serializer.

As the products MAG-IMG002X1 and MAG-CXP00002 are designed to be used as a chip set, they are also seen as one single system from the user/host side. This means that the host side (CoaxPress host) sees both chips as one system, which virtually only contains one register map.

For more information on how the serializer needs to be powered, clocked and connected to the coax cable, it is referred to the respective datasheet of the serializer.

For more information on how to operate the imager through a CoaxPress host, it is also referred to the datasheet of the serializer.

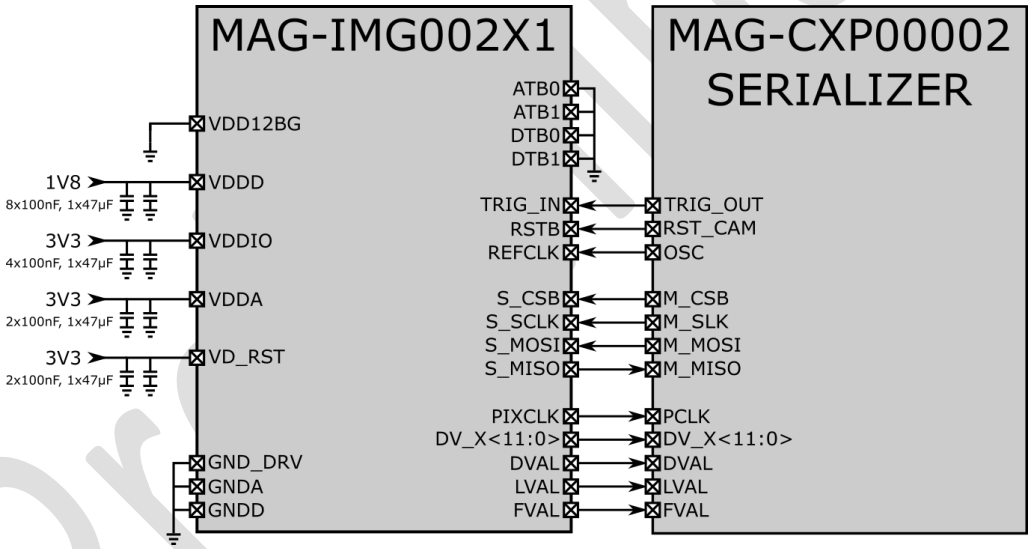

Figure 14: Typical application diagram with MAG-CXP00002 serializer

9.2 Power management

Power management is very important for this imager as the 1.8V supply can use up to almost 1A and the 3.3V up to 200mA. With these currents it is necessary to keep the connection resistance as low as possible. This can be done by using wide tracks and by keeping the tracks length short, to allow a maximum voltage drop of ~20mV. If this is not feasible it might be required to pick a strategically placed reference point close to the imager for the feedback of the power supply.

The power consumption of the sensor has a lot of dependency on the resolution, frame rate, scene brightness and scene gradient. Table 5 shows the power consumption for different modes of the sensor.

Preliminary

9.3 Thermal management

Because of the high power consumption of this imager in certain modes, it is advised to take care of the thermal management. The CLCC-104 package has a thermal pad on the back side, and it is advised to solder this thermal pad to the PCB, which contains thermal VIAs to get the heat to the other side of the PCB. Passive or active cooling at the backside of the PCB can help to reduce the on-chip's temperature.

The thermal design must be able to hold the temperature of the chip below the max value of 85 degC junction (and preferably even lower at high Total Ionization Doses (see section 9.4). Therefore, it is recommended to calculate the worst case temperature before manufacturing. The required parameters for calculating these temperatures are shown in Table 14.

Table 14: thermal parameters imager

Name	Description parameter	min	typ	max	unit
Rjg	Heat resistance die attach glue		0.080		K/W
Rp	Heat resistance ceramic package/heat pad		0.149		K/W
Kjg	Thermal conductivity die attach glue		3.3		W/mK
Kp	Thermal conductivity ceramic package/heat pad		18		W/mK

9.4 Recommended operating conditions in radiation environment

The main performance parameter that is impacted by the irradiation is the dark current. The result of the increased dark current, is that the image can saturate faster for long exposure times. In terms of functionality there is in principle no difference. The imager is still fully functional. Due to on-chip parameter drifts, some biasing parameters might require some re-tuning during its lifetime. In practice, this is a simple upload of a register setting through the CoaXPress link and does not require manual maintenance on the camera itself. Note that after booting, the camera anyways needs a register map upload with the correct configuration settings.

Additionally, the dark current also increases with increased temperature, and this is the case for all CMOS image sensors. The sensor's self heating is however also dependent on the dose rate it receives. So a higher dose rate means a higher temperature increase, which leads to higher dark current.

For optimal operation of the sensor, the following advises are proposed when operating the sensor at high doses and high dose rates (+1kGy/hr):

- Keep exposure time below 5ms, and preferably as low as possible.
  - The higher the exposure time, the more dark current is integrated. See the videos for our tested conditions.
  - Note that the exposure time is easily programmable through uplink CXP commands. So it can be changed on the fly!
- Keep the temperature low:
  - This is a system's engineering solution, where you could actively cool the sensor, so it will not heat up. In this case the above advise do not necessarily have to be followed.
- When the dose rate is lower (e.g. <0.5kGy/hr), the sensor temperature will not increase much, so you don't suffer much from the heating.

Preliminary

9.5 Overview of supported modes and defaults

The sensor supports a wide range of different resolutions and frame rates. However, different clock settings need to be adjusted together with the resolution and the frame rate. The adjustment of these settings is described in section 8.3. Table 15 shows the intended supported modes and their corresponding settings. HD5 mode is the default mode after start-up. However, the default mode at start-up (after reset) is not using an optimal register map – therefore it is suggested to anyways load the correct register map file. The reason is that after a reset (boot in default mode), there is a high current consumption on the 1.8V supply of close to 1A of current. Therefore, the default mode is not advised.

For all the modes defined in the table, the '*ManualSettings_black_row*' register could also be enabled.

Table 15: Overview of supported imager modes in terms of image size and speed.

Register control	HD5 (Default after startup)	HD40	FHD10	FHD25	FHD30	VGA5	VGA50	VGA100
ImageSize_Height	720	720	1080	1080	1080	480	480	480
ImageSize_Width	1280	1280	1920	1920	1920	640	640	640
ImageSize_OffsetX	320	320	0	0	0	640	640	640
ImageSize_OffsetY	212	212	32	32	32	332	332	332
ManualSettings_black_row	0/1	0/1	0/1	0/1	0/1	0/1	0/1	0/1
AcquisitionFrameRate_Value [fps]	5,00	40,00	10,00	25,00	30,00	5,00	50,00	100,00
ExposureTime_Value (min) [us]	277,78	31,89	87,41	34,97	29,14	367,65	36,76	18,38
ExposureTime_Value (max) [ms]	200,00	25,00	100,00	40,00	33,33	200,00	20,00	10,00
PixelSize_Value	10,00	10,00	10,00	10,00	10,00	10,00	10,00	10,00
Reference Clock (MHz)	20	20	20	20	20	20	20	20
AnalogTrimming_idiv_ctrl	1	1	1	1	1	1	1	1
Counter Clock (MHz)	25	66,67	28,57	66,67	100,00	25,00	50,00	100,00
AnalogTrimming_cntr_clk_ctrl	7	2	6	2	1	7	3	1
Output CMOS driver speed [MHz]	50,00	50,00	50,00	100,00	100,00	25,00	25,00	50,00
AnalogTrimming_sdr_clk_ctrl	3	3	3	1	1	7	7	3

Preliminary

10. Package and cover glass information

10.1 Package information and drawings

The package is a 104-pin ceramic LCC (CLCC). The package drawing is depicted in Figure 15. The outer dimensions are 18mm by 18mm. **For PIN-1 indications, it is referred to Figure 4 for more details!**

The imager package is sealed with a glass lid to protect from dust and other contaminating particles or objects. The glass lid is a radiation-hardened glass and is glued to the package with a rad-hard epoxy. More information on the cover glass can be found in the next subsection.

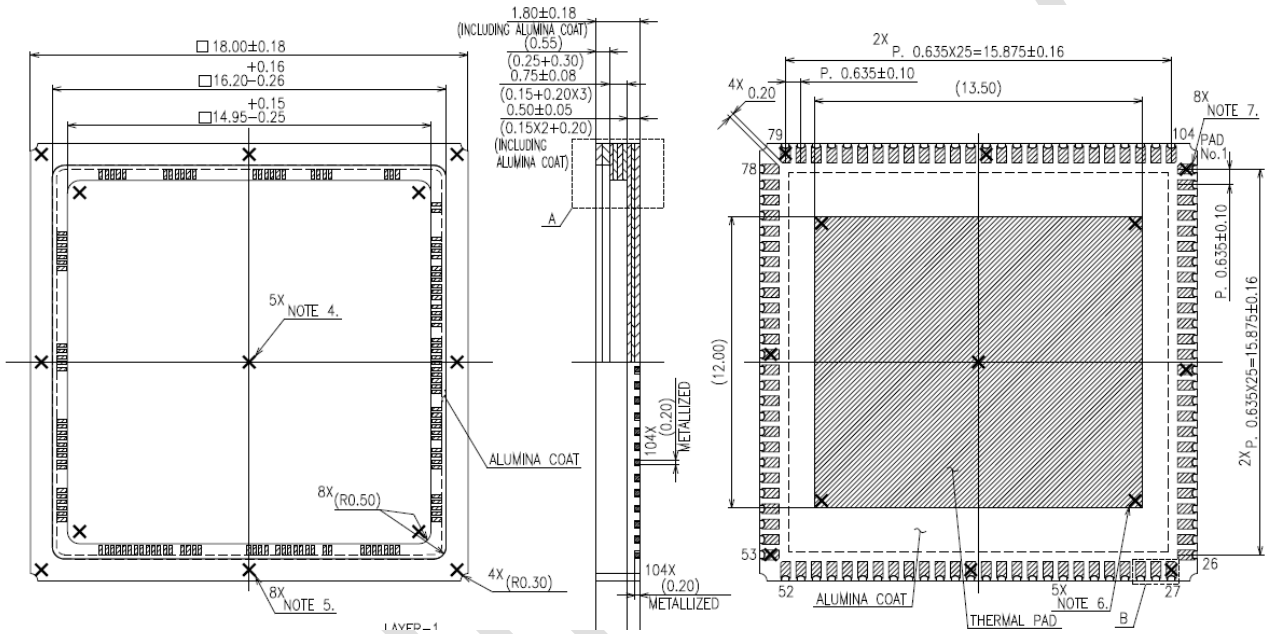

Figure 15 Package dimensions drawing. All measures are in [mm]. ***For PIN-1 indications, it is referred to Figure 4 for more details!***

10.2 Cover glass

The cover glass is of the material Corning 7980 0F and protects the image sensor. The material is in essence high purity non-crystalline silica glass, and is known for its radiation hardness, which means that it does not turn brown under high irradiation doses. The glass is able to withstand 1MGy of TID without coloring.

The cover glass has an anti-reflective coating on both sides with the following specifications: Ravg < 1.75% @ 300-800 nm, AOI 0deg.

In the next figure the transmission efficiency is shown as a function of the wavelength for 5 different samples. The transmittance is measured from 350nm to 900nm (limitation of the equipment). It shows a transmittance of >97% for all wavelengths.

Figure 17 shows the comparison of the transmittance of Glassplate nr 1 which is irradiated up to 1 MGy of TID, with its pre-irrad transmittance. It can be observed that the transmittance only decreases with maximally +1% after a total dose of 1MGy.

Copyright © Magics Technologies NV

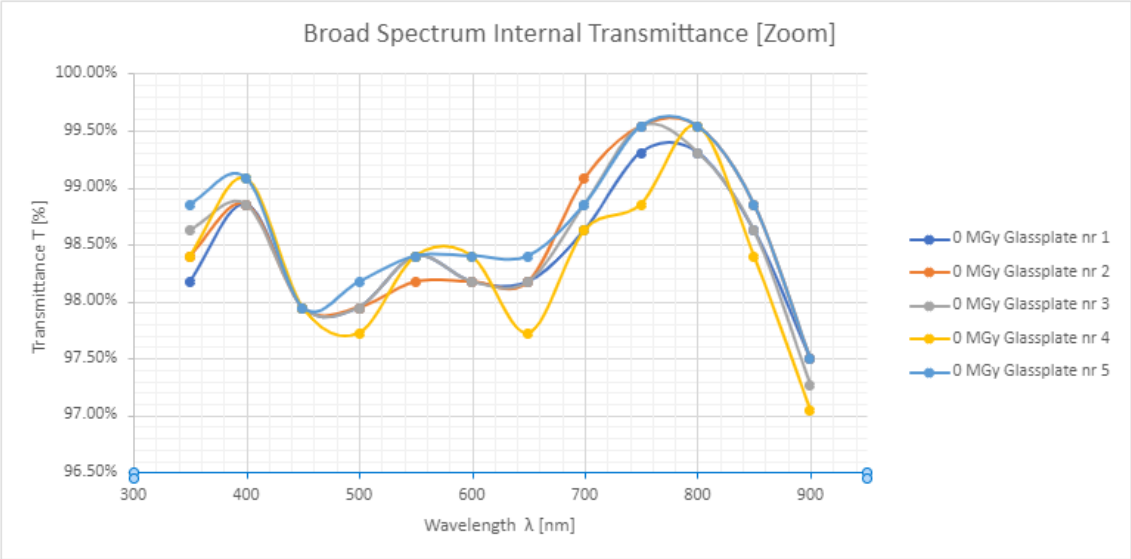

Figure 16: Transmittance [%] as a function of the wavelength for 5 different glass plates (pre-irradiation)

Figure 17: Comparison of transmittance of a Corning glass plate at 0 MGy and 1 MGy TID.

Copyright © Magics Technologies NV

10.3 Mechanical information

Figure 18 depicts the cross section of the full product, which includes the ceramic package, the image sensor die and the cover glass. The typical dimensions are given in the picture. For the inaccuracies we refer to the mechanical specifications in Table 16 and the package information and drawings in section 10.1.

Figure 18: Cross-section of the product including the ceramic package, the image sensor die and the cover glass.

The following table gives more information about the mechanical specifications.

Table 16: Mechanical specifications

Description parameter	min	typ	max	unit
Die thickness		750		um
Die size relative to seal ring edge - the dimensions after dicing will be typically larger (up to 100um larger)		13400 x 14150		um
Die placement accuracy in package	(-100)		(+100)	um
Die rotation accuracy	-1		1	deg
Die center - X offset to the center of package	(-100)	0	(+100)	um
Die center - Y offset to the center of the package	(-100)	0	(+100)	um
Die position - X tilt	-0.2		0.2	deg
Die position - Y tilt	-0.2		0.2	deg
Optical center referenced from package center (X–dir)	(-100)	-525	(+100)	um
Optical center referenced from package center (Y–dir)	(-100)	+355	(+100)	um
Optical active array size – X (excluding black pixels)		9600		um
Optical active array size – Y (excluding black pixels)		5400		um
Cover glass square size	(-100)	17900	(+100)	um
Cover glass thickness	(-100)	800	(+100)	um
Cover glass placement accuracy	-100		+100	um

Preliminary

Copyright © Magics Technologies NV

The next figure depicts the optical center of the array with respect to the package center. This information is important to reference the optical center correctly to the center of the lens.

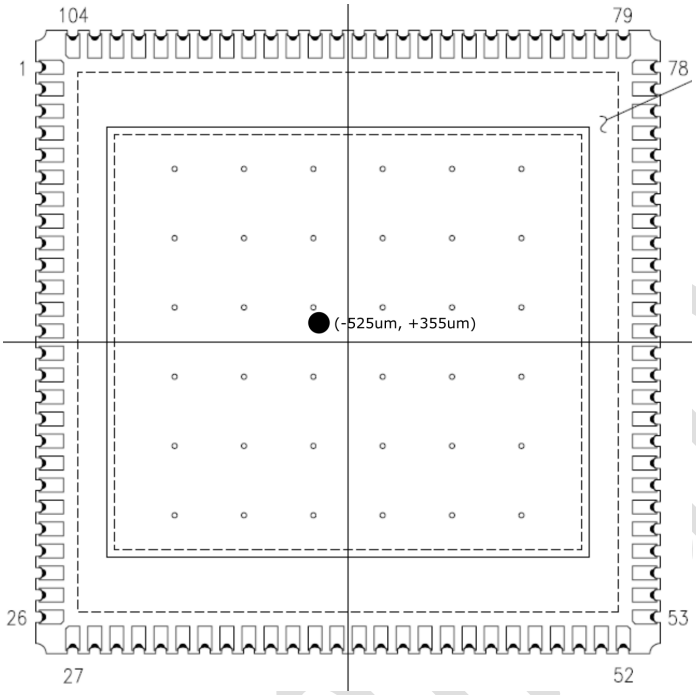

Figure 19: Graphic to indicate the respective optical center of the pixel array compared to the package center point (front view of the package).

Preliminary

11. Soldering and handling information

11.1 Soldering information

Soldering of the image sensor must be done using a low-temperature thermal reflow profile and corresponding solder paste. Figure 20 shows such a thermal profile in graphical form. It is important to keep the parameters in Table 17 within the given ranges. The specific values and other parameters depend on other components present on the PCB and on the solder paste used. Magics has however good experience with the solder paste SB58-COSMO-NH-T4 and has used the below reflow profile parameters in combination with this solder paste.

Note that it is important to keep the peak temperature lower than 200 degC to avoid introducing stress in the package.

Table 17: Soldering reflow profile parameters

Parameter	Parameter description	Min	Typ	Max	Unit
t_p	Time within 5°C of peak temperature	10	30	60	s
T_p	Peak temperature		180	200	°C
T_L	Solder melting temperature (Pb-free)	139			°C

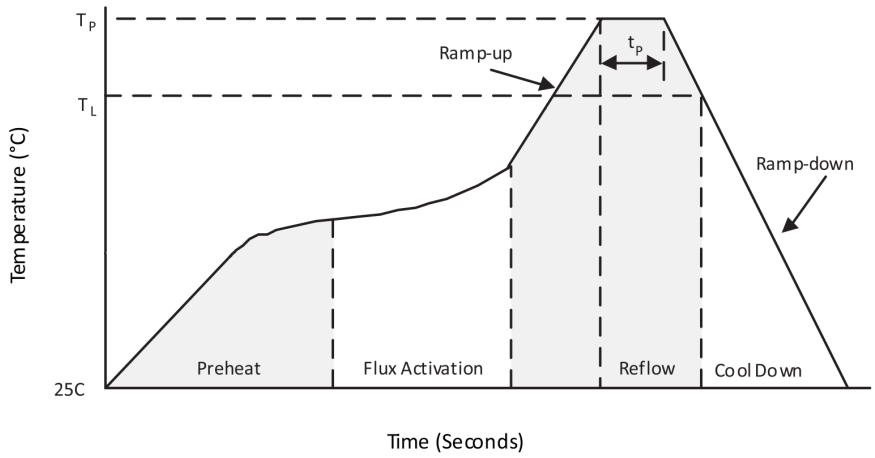

Figure 20: Reflow profile

Preliminary

11.2 Handling

11.2.1 ESD and handling

Imaging sensors must be handled in an ESD safe area. A ground strap is required when handling the sensors in a non-ESD safe area.

A few guidelines when handling image sensors:

- Please wear mouth protection (a face mask) to minimize the risk of glass lid contamination through saliva or other particles.
- Please wear clean gloves that are ESD safe. Contaminated or dirty gloves need to be changed or cleaned. Finger tips of the gloves should be tight to reduce the risk of contaminating the glass lid.
- Make sure to always handle the image sensor at the package, and avoid touching the glass lid. When delivered, a Kapton tape is protecting the glass.
- Avoid touching the glass lid in all cases. Finger grease can etch optical coatings and cause permanent damage.
- Only remove the Kapton tape from the glass at the very last stage.

11.2.2 Cover glass cleaning

If by any reason the cover glass is contaminated, it must be cleaned in an ESD-safe environment, preferably also wearing a wrist-band. Gloves and mouth protection should be worn at all times.

Loose particles on top of the cover glass can be blown off using clean nitrogen or clean ionized dry air.

Wet cleaning can be done with IPA (Isopropylalcohol) on a clean wipe. Wipe gently over the complete cover glass and avoid using the same part of the wipe again. Use a small intermediate dispenser for the IPA to avoid contamination of the IPA in the bottle. Avoid saturating the wipe as using too much IPA may leave drying stains afterwards.

Select a suitable wipe. Be aware that some ESD protective wipes easily scratch optical coatings on the cover glass. Suitable examples are Berkshire Super Polx 1200 and Berkshire Durx 670.

It is always preferred to keep the sensors clean and avoid the need for cleaning. Customers are advised to evaluate their cover glass cleaning process before implementing it on production material.

11.2.3 Storing

If stored for longer time, the devices need to be stored in a moisture-proof, vacuum-sealed and anti-static bag. It should be stored in a temperature and humidity-controlled environment. The storage temperature should not be higher than 50°C, while the humidity should be below 60%.

Preliminary

Copyright © Magics Technologies NV

12. Register bank description

The register bank is built in such a way that it supports the GenICam and IIDC2 standard when assembling it in a camera. When used as a chip set with the serializer product MAG-CXP00002-NP, a full GenICam and IIDC2 compliant product can be built. As a result of this is the register map quite elaborate. However, quite some entries are constants and read only.

Below the reader can find an overview of the full register map in section 12.1. For the more detailed register map, we refer to section 12.2 for the register settings which are configurable and to section 0 for the register bits which are constant and read only. Note that for configurable settings, such as exposure time for example, section 12.2 describes how these settings can be configured. However, typically these settings have a default value, but also a minimum and maximum value. These corresponding minimum and maximum values can be found back in the constants section in section 0. We refer to the register overview in the next section to have a full view of all settings and corresponding constants.

12.1 Register Overview

REG	SETTING	REGISTER BIT(S)
0x0000	ChipId	31 - 0
0x6000	IIDC2EntryImager_Keyword	31 - 0
0x6004	IIDC2EntryImager_SubMinorVersionNumber	7 - 0
0x6004	IIDC2EntryImager_MinorVersionNumber	15 - 8
0x6004	IIDC2EntryImager_MajorVersionNumber	23 - 16
0x6008	IIDC2EntryImager_NumberOfCategoryBlocks	15 - 0
0x6010	IIDC2EntryImager_OffsetForXmlManifestTable	31 - 0
0x6020	IIDC2EntryImager_DeviceControl	31 - 0
0x6024	IIDC2EntryImager_TransportLayerControl	31 - 0
0x6028	IIDC2EntryImager_ImageFormatControl	31 - 0
0x602c	IIDC2EntryImager_AcquisitionControl	31 - 0
0x6030	IIDC2EntryImager_LuminanceControl	31 - 0
0x6034	IIDC2EntryImager_ChromaControl	31 - 0
0x6038	IIDC2EntryImager_LUTControl	31 - 0
0x603c	IIDC2EntryImager_TriggerControl	31 - 0
0x6040	IIDC2EntryImager_UserSetControl	31 - 0
0x6044	IIDC2EntryImager_DigitalIOControl	31 - 0
0x6048	IIDC2EntryImager_CounterAndTimerControl	31 - 0
0x604c	IIDC2EntryImager_EventControl	31 - 0
0x6050	IIDC2EntryImager_ChunkControl	31 - 0
0x6054	IIDC2EntryImager_LightControl	31 - 0
0x6080	IIDC2EntryImager_VendorUniqueControl1	31 - 0
0x6084	IIDC2EntryImager_VendorUniqueControl2	31 - 0
0x6088	IIDC2EntryImager_VendorUniqueControl3	31 - 0
0x608c	IIDC2EntryImager_VendorUniqueControl4	31 - 0
0x6090	IIDC2EntryImager_VendorUniqueControl5	31 - 0
0x6094	IIDC2EntryImager_VendorUniqueControl6	31 - 0
0x6098	IIDC2EntryImager_VendorUniqueControl7	31 - 0
0x609c	IIDC2EntryImager_VendorUniqueControl8	31 - 0
0x7200	AcquisitionControl_SizeOfCategoryBlock	23 - 0
0x7200	AcquisitionControl_CategoryBlockNumber	31 - 24
0x7220	AcquisitionCommand_ValueType	23 - 16
0x7220	AcquisitionCommand_Readable	24
0x7220	AcquisitionCommand_Writable	25
0x7220	AcquisitionCommand_UserSetLoadable	26
0x7220	AcquisitionCommand_Active	30
0x7220	AcquisitionCommand_Implemented	31
0x7224	AcquisitionCommand_OffsetForExpanded	31 - 0
0x7228	AcquisitionCommand_Control	3 - 0
0x7238	AcquisitionCommand_Abort	0
0x7238	AcquisitionCommand_Stop	1
0x7238	AcquisitionCommand_Continuous	8
0x7238	AcquisitionCommand_MultiFrame	9

Copyright © Magics Technologies NV

MAG-IMG002X1-NC – Full HD CMOS rad-hard image sensor

0x7238	AcquisitionCommand_ImageBufferRead	10
0x7238	AcquisitionCommand_Retransmit	16
0x723c	AcquisitionCommand_Value	3 - 0
0x7240	AcquisitionFrameCount_ValueType	23 - 16
0x7240	AcquisitionFrameCount_Readable	24
0x7240	AcquisitionFrameCount_Writable	25
0x7240	AcquisitionFrameCount_UserSetLoadable	26
0x7240	AcquisitionFrameCount_Active	30
0x7240	AcquisitionFrameCount_Implemented	31
0x7244	AcquisitionFrameCount_OffsetForExpanded	31 - 0
0x7248	AcquisitionFrameCount_Control	31 - 0
0x7254	AcquisitionFrameCount_Min	31 - 0
0x7258	AcquisitionFrameCount_Max	31 - 0
0x725c	AcquisitionFrameCount_Value	15 - 0
0x7260	ImageBufferMode_Implemented	31
0x7280	ImageBufferFrameCount_Implemented	31
0x72a0	AcquisitionFrameRate_NoSpecifyInq	0
0x72a0	AcquisitionFrameRate_ManualInq	1
0x72a0	AcquisitionFrameRate_DefaultInq	4
0x72a0	AcquisitionFrameRate_ValueType	23 - 16
0x72a0	AcquisitionFrameRate_Readable	24
0x72a0	AcquisitionFrameRate_Writable	25
0x72a0	AcquisitionFrameRate_UserSetLoadable	26
0x72a0	AcquisitionFrameRate_Active	30
0x72a0	AcquisitionFrameRate_Implemented	31
0x72a4	AcquisitionFrameRate_OffsetForExpanded	31 - 0
0x72a8	AcquisitionFrameRate_Control	3 - 0
0x72ac	AcquisitionFrameRate_Mult	31 - 0
0x72b0	AcquisitionFrameRate_Div	31 - 0
0x72b4	AcquisitionFrameRate_Min	31 - 0
0x72b8	AcquisitionFrameRate_Max	31 - 0
0x72bc	AcquisitionFrameRate_Value	8 - 0
0x72c0	AcquisitionFrameInterval_Implemented	31
0x7300	ImageFormatControl_SizeOfCategoryBlock	23 - 0
0x7300	ImageFormatControl_CategoryBlockNumber	31 - 24
0x7320	ImageFormatSelector_Implemented	31
0x7340	ApplyImageFormat_Implemented	31
0x7360	ImageSize_NoSpecifyInq	0
0x7360	ImageSize_ManualInq	1
0x7360	ImageSize_AutoInq	2
0x7360	ImageSize_AutoOnceInq	3
0x7360	ImageSize_DefaultInq	4
0x7360	ImageSize_ValueType	23 - 16
0x7360	ImageSize_Readable	24
0x7360	ImageSize_Writable	25
0x7360	ImageSize_UserSetLoadable	26
0x7360	ImageSize_Active	30
0x7360	ImageSize_Implemented	31
0x7364	ImageSize_OffsetForExpanded	31 - 0
0x7368	ImageSize_Control	3 - 0
0x736c	ImageSize_MinOffsetX	31 - 0
0x7370	ImageSize_IncOffsetX	31 - 0
0x7374	ImageSize_MinWidth	31 - 0
0x7378	ImageSize_IncWidth	31 - 0
0x737c	ImageSize_TotalSizeX	31 - 0
0x7380	ImageSize_MinOffsetY	31 - 0
0x7388	ImageSize_MinHeight	31 - 0
0x7390	ImageSize_TotalSizeY	31 - 0
0x7394	ImageSize_OffsetX	10 - 0
0x7398	ImageSize_Width	10 - 0
0x739c	ImageSize_OffsetY	10 - 0
0x73a0	ImageSize_Height	10 - 0
0x73c0	PixelCoding_NoSpecifyInq	0
0x73c0	PixelCoding_ManualInq	1

Copyright © Magics Technologies NV

MAG-IMG002X1-NC – Full HD CMOS rad-hard image sensor

0x73c0	PixelCoding_AutoInq	2
0x73c0	PixelCoding_AutoOnceInq	3
0x73c0	PixelCoding_DefaultInq	4
0x73c0	PixelCoding_ValueType	23 - 16
0x73c0	PixelCoding_Readable	24
0x73c0	PixelCoding_Writable	25
0x73c0	PixelCoding_UserSetLoadable	26
0x73c0	PixelCoding_Active	30
0x73c0	PixelCoding_Implemented	31
0x73c4	PixelCoding_OffsetForExpanded	31 - 0
0x73c8	PixelCoding_Control	3 - 0
0x73cc	PixelCoding_BayerGRPacked	3
0x73cc	PixelCoding_BayerRGPacked	6
0x73cc	PixelCoding_BayerGBPacked	9
0x73cc	PixelCoding_BayerBGPacked	12
0x73d0	PixelCoding_YUV411Packed	4
0x73d0	PixelCoding_YUV422Packed	12
0x73d0	PixelCoding_YUV444Packed	20
0x73d4	PixelCoding_RGBPacked	2
0x73d4	PixelCoding_BGRPacked	10
0x73d8	PixelCoding_Mono	0
0x73d8	PixelCoding_MonoSigned	1
0x73d8	PixelCoding_MonoPacked	2
0x73e0	PixelSize_NoSpecifyInq	0
0x73e0	PixelSize_ManualInq	1
0x73e0	PixelSize_AutoInq	2
0x73e0	PixelSize_AutoOnceInq	3
0x73e0	PixelSize_DefaultInq	4
0x73e0	PixelSize_ValueType	23 - 16
0x73e0	PixelSize_Readable	24
0x73e0	PixelSize_Writable	25
0x73e0	PixelSize_UserSetLoadable	26
0x73e0	PixelSize_Active	30
0x73e0	PixelSize_Implemented	31
0x73e4	PixelSize_OffsetForExpanded	31 - 0
0x73e8	PixelSize_Control	3 - 0
0x73f4	PixelSize_Bpp48	16
0x73f8	PixelSize_Bpp8	8
0x73f8	PixelSize_Bpp10	10
0x73f8	PixelSize_Bpp12	12
0x73f8	PixelSize_Bpp14	14
0x73f8	PixelSize_Bpp16	16
0x73f8	PixelSize_Bpp24	24
0x73fc	PixelSize_Value	3 - 0
0x7400	PixelEndian_Implemented	31
0x7420	BinningHorizontal_Implemented	31
0x7440	BinningVertical_Implemented	31
0x7460	DecimationHorizontal_NoSpecifyInq	0
0x7460	DecimationHorizontal_ManualInq	1
0x7460	DecimationHorizontal_AutoInq	2
0x7460	DecimationHorizontal_AutoOnceInq	3
0x7460	DecimationHorizontal_DefaultInq	4
0x7460	DecimationHorizontal_ValueType	23 - 16
0x7460	DecimationHorizontal_Readable	24
0x7460	DecimationHorizontal_Writable	25
0x7460	DecimationHorizontal_UserSetLoadable	26
0x7460	DecimationHorizontal_Active	30
0x7460	DecimationHorizontal_Implemented	31
0x7464	DecimationHorizontal_OffsetForExpanded	31 - 0
0x7468	DecimationHorizontal_Control	3 - 0
0x746c	DecimationHorizontal_Mult	31 - 0
0x7470	DecimationHorizontal_Div	31 - 0
0x7474	DecimationHorizontal_Min	31 - 0
0x7478	DecimationHorizontal_Max	31 - 0

Copyright © Magics Technologies NV

MAG-IMG002X1-NC – Full HD CMOS rad-hard image sensor

0x747c	DecimationHorizontal_Value	1 - 0
0x7480	DecimationVertical_NoSpecifyInq	0
0x7480	DecimationVertical_ManualInq	1
0x7480	DecimationVertical_AutoInq	2
0x7480	DecimationVertical_AutoOnceInq	3
0x7480	DecimationVertical_DefaultInq	4
0x7480	DecimationVertical_ValueType	23 - 16
0x7480	DecimationVertical_Readable	24
0x7480	DecimationVertical_Writable	25
0x7480	DecimationVertical_UserSetLoadable	26
0x7480	DecimationVertical_Active	30
0x7480	DecimationVertical_Implemented	31
0x7484	DecimationVertical_OffsetForExpanded	31 - 0
0x7488	DecimationVertical_Control	3 - 0
0x748c	DecimationVertical_Mult	31 - 0
0x7490	DecimationVertical_Div	31 - 0
0x7494	DecimationVertical_Min	31 - 0
0x7498	DecimationVertical_Max	31 - 0
0x749c	DecimationVertical_Value	1 - 0
0x74a0	ReverseX_NoSpecifyInq	0
0x74a0	ReverseX_ManualInq	1
0x74a0	ReverseX_AutoInq	2
0x74a0	ReverseX_AutoOnceInq	3
0x74a0	ReverseX_DefaultInq	4
0x74a0	ReverseX_ValueType	23 - 16
0x74a0	ReverseX_Readable	24
0x74a0	ReverseX_Writable	25
0x74a0	ReverseX_UserSetLoadable	26
0x74a0	ReverseX_Active	30
0x74a0	ReverseX_Implemented	31
0x74a4	ReverseX_OffsetForExpanded	31 - 0
0x74a8	ReverseX_Control	3 - 0
0x74ac	ReverseX_BitWritable	0
0x74b0	ReverseX_Value	0
0x74c0	ReverseY_NoSpecifyInq	0
0x74c0	ReverseY_ManualInq	1
0x74c0	ReverseY_AutoInq	2
0x74c0	ReverseY_AutoOnceInq	3
0x74c0	ReverseY_DefaultInq	4
0x74c0	ReverseY_ValueType	23 - 16
0x74c0	ReverseY_Readable	24
0x74c0	ReverseY_Writable	25
0x74c0	ReverseY_UserSetLoadable	26
0x74c0	ReverseY_Active	30
0x74c0	ReverseY_Implemented	31
0x74c4	ReverseY_OffsetForExpanded	31 - 0
0x74c8	ReverseY_Control	3 - 0
0x74cc	ReverseY_BitWritable	0
0x74d0	ReverseY_Value	0
0x74e0	TestPattern_NoSpecifyInq	0
0x74e0	TestPattern_ManualInq	1
0x74e0	TestPattern_AutoInq	2
0x74e0	TestPattern_AutoOnceInq	3
0x74e0	TestPattern_DefaultInq	4
0x74e0	TestPattern_ValueType	23 - 16
0x74e0	TestPattern_Readable	24
0x74e0	TestPattern_Writable	25
0x74e0	TestPattern_UserSetLoadable	26
0x74e0	TestPattern_Active	30
0x74e0	TestPattern_Implemented	31
0x74e4	TestPattern_OffsetForExpanded	31 - 0
0x74e8	TestPattern_Control	3 - 0
0x74ec	TestPattern_VendorSpecific0	24
0x74ec	TestPattern_VendorSpecific1	25

Copyright © Magics Technologies NV

MAG-IMG002X1-NC – Full HD CMOS rad-hard image sensor

0x74ec	TestPattern_VendorSpecific2	26
0x74ec	TestPattern_VendorSpecific3	27
0x74ec	TestPattern_VendorSpecific4	28
0x74ec	TestPattern_VendorSpecific5	29
0x74ec	TestPattern_VendorSpecific6	30
0x74ec	TestPattern_VendorSpecific7	31
0x74f4	TestPattern_GreyHorizontalRampMoving	0
0x74f4	TestPattern_GreyVerticalRampMoving	1
0x74f4	TestPattern_HorizontalMoving	8
0x74f4	TestPattern_VerticalLineMoving	9
0x74f4	TestPattern_GreyScaleChart	17
0x74f8	TestPattern_Off	0
0x74f8	TestPattern_Black	1
0x74f8	TestPattern_White	2
0x74f8	TestPattern_Grey55	3
0x74f8	TestPattern_GreyAA	4
0x74f8	TestPattern_GreyHorizontalRamp	16
0x74f8	TestPattern_GreyVerticalRamp	17
0x74f8	TestPattern_StraightCounter	24
0x74fc	TestPattern_Value	31 - 0
0x7500	LuminanceControl_SizeOfCategoryBlock	23 - 0
0x7500	LuminanceControl_CategoryBlockNumber	31 - 24
0x7520	ExposureTime_NoSpecifyInq	0
0x7520	ExposureTime_ManualInq	1
0x7520	ExposureTime_AutoInq	2
0x7520	ExposureTime_AutoOnceInq	3
0x7520	ExposureTime_DefaultInq	4
0x7520	ExposureTime_ValueType	23 - 16
0x7520	ExposureTime_Readable	24
0x7520	ExposureTime_Writable	25
0x7520	ExposureTime_UserSetLoadable	26
0x7520	ExposureTime_Active	30
0x7520	ExposureTime_Implemented	31
0x7524	ExposureTime_OffsetForExpanded	31 - 0
0x7528	ExposureTime_Control	3 - 0
0x753c	ExposureTime_Value	17 - 0
0x7540	BlackLevel_Implemented	31
0x7560	Gain_Implemented	31
0x7580	Gamma_Implemented	31
0x75a0	Sharpness_Implemented	31
0x75c0	ALCLevel_Implemented	31
0x7800	TriggerControl_SizeOfCategoryBlock	23 - 0
0x7800	TriggerControl_CategoryBlockNumber	31 - 24
0x7820	TriggerMode_ManualInq	1
0x7820	TriggerMode_DefaultInq	4
0x7820	TriggerMode_ValueType	23 - 16
0x7820	TriggerMode_Readable	24
0x7820	TriggerMode_Writable	25
0x7820	TriggerMode_UserSetLoadable	26
0x7820	TriggerMode_Active	30
0x7820	TriggerMode_Implemented	31
0x7824	TriggerMode_OffsetForExpanded	31 - 0
0x7828	TriggerMode_Control	3 - 0
0x782c	TriggerMode_VendorSpecific0	24
0x782c	TriggerMode_VendorSpecific1	25
0x782c	TriggerMode_VendorSpecific2	26
0x782c	TriggerMode_VendorSpecific3	27
0x782c	TriggerMode_VendorSpecific4	28
0x782c	TriggerMode_VendorSpecific5	29
0x782c	TriggerMode_VendorSpecific6	30
0x782c	TriggerMode_VendorSpecific7	31
0x7838	TriggerMode_Off	0
0x7838	TriggerMode_On	1
0x783c	TriggerMode_Value	0

Copyright © Magics Technologies NV

MAG-IMG002X1-NC – Full HD CMOS rad-hard image sensor

0x7840	TriggerSequence_ManualInq	1
0x7840	TriggerSequence_DefaultInq	4
0x7840	TriggerSequence_ValueType	23 - 16
0x7840	TriggerSequence_Readable	24
0x7840	TriggerSequence_Writable	25
0x7840	TriggerSequence_UserSetLoadable	26
0x7840	TriggerSequence_Active	30
0x7840	TriggerSequence_Implemented	31
0x7844	TriggerSequence_OffsetForExpanded	31 - 0
0x7848	TriggerSequence_Control	3 - 0
0x784c	TriggerSequence_VendorSpecific0	24
0x784c	TriggerSequence_VendorSpecific1	25
0x784c	TriggerSequence_VendorSpecific2	26
0x784c	TriggerSequence_VendorSpecific3	27
0x784c	TriggerSequence_VendorSpecific4	28
0x784c	TriggerSequence_VendorSpecific5	29
0x784c	TriggerSequence_VendorSpecific6	30
0x784c	TriggerSequence_VendorSpecific7	31
0x7858	TriggerSequence_TriggerSequence0	0
0x7858	TriggerSequence_TriggerSequence1	1
0x7858	TriggerSequence_TriggerSequence2	2
0x7858	TriggerSequence_TriggerSequence3	3
0x7858	TriggerSequence_TriggerSequence4	4
0x7858	TriggerSequence_TriggerSequence5	5
0x7858	TriggerSequence_TriggerSequence6	6
0x785c	TriggerSequence_Value	31 - 0
0x7860	TriggerSource_ManualInq	1
0x7860	TriggerSource_DefaultInq	4
0x7860	TriggerSource_ValueType	23 - 16
0x7860	TriggerSource_Readable	24
0x7860	TriggerSource_Writable	25
0x7860	TriggerSource_UserSetLoadable	26
0x7860	TriggerSource_Active	30
0x7860	TriggerSource_Implemented	31
0x7864	TriggerSource_OffsetForExpanded	31 - 0
0x7868	TriggerSource_Control	3 - 0
0x786c	TriggerSource_VendorSpecific0	24
0x7870	TriggerSource_SoftwareTrigger	0
0x787c	TriggerSource_Value	6 - 0
0x7880	TriggerAdditionalParameter_ManualInq	1
0x7880	TriggerAdditionalParameter_DefaultInq	4
0x7880	TriggerAdditionalParameter_ValueType	23 - 16
0x7880	TriggerAdditionalParameter_Readable	24
0x7880	TriggerAdditionalParameter_Writable	25
0x7880	TriggerAdditionalParameter_UserSetLoadable	26
0x7880	TriggerAdditionalParameter_Active	30
0x7880	TriggerAdditionalParameter_Implemented	31
0x7884	TriggerAdditionalParameter_OffsetForExpanded	31 - 0
0x7888	TriggerAdditionalParameter_Control	3 - 0
0x788c	TriggerAdditionalParameter_Mult	31 - 0
0x7890	TriggerAdditionalParameter_Div	31 - 0
0x7894	TriggerAdditionalParameter_Min	31 - 0
0x7898	TriggerAdditionalParameter_Max	31 - 0
0x789c	TriggerAdditionalParameter_Value	15 - 0
0x78a0	TriggerDelay_Implemented	31
0x78c0	SoftwareTrigger_ManualInq	1
0x78c0	SoftwareTrigger_DefaultInq	4
0x78c0	SoftwareTrigger_ValueType	23 - 16
0x78c0	SoftwareTrigger_Readable	24
0x78c0	SoftwareTrigger_Writable	25
0x78c0	SoftwareTrigger_UserSetLoadable	26
0x78c0	SoftwareTrigger_Active	30
0x78c0	SoftwareTrigger_Implemented	31
0x78c4	SoftwareTrigger_OffsetForExpanded	31 - 0

Copyright © Magics Technologies NV

MAG-IMG002X1-NC – Full HD CMOS rad-hard image sensor

0x78c8	SoftwareTrigger_Control	3 - 0
0x78d8	SoftwareTrigger_Inactive	0
0x78d8	SoftwareTrigger_Activetable	1
0x78dc	SoftwareTrigger_Value	0
0x8200	AnalogTrimming_SizeOfCategoryBlock	23 - 0
0x8200	AnalogTrimming_CategoryBlockNumber	31 - 24
0x8220	AnalogTrimming_NoSpecifyInq	0
0x8220	AnalogTrimming_ManualInq	1
0x8220	AnalogTrimming_AutoInq	2
0x8220	AnalogTrimming_AutoOnceInq	3
0x8220	AnalogTrimming_DefaultInq	4
0x8220	AnalogTrimming_ValueType	23 - 16
0x8220	AnalogTrimming_Readable	24
0x8220	AnalogTrimming_Writable	25
0x8220	AnalogTrimming_UserSetLoadable	26
0x8220	AnalogTrimming_Active	30
0x8220	AnalogTrimming_Implemented	31
0x8224	AnalogTrimming_OffsetForExpanded	31 - 0
0x8228	AnalogTrimming_Control	3 - 0
0x822c	AnalogTrimming_NumberOfElements	30 - 0
0x822c	AnalogTrimming_MoreDimension	31
0x8234	AnalogTrimming_idiv_ctrl	4 - 3
0x8234	AnalogTrimming_sdr_clk_ctrl	27 - 25
0x8234	AnalogTrimming_cntr_clk_ctrl	31 - 29
0x825c	AnalogTrimming_pclk_edge	6 - 5
0x8300	ManualSettings_SizeOfCategoryBlock	23 - 0
0x8300	ManualSettings_CategoryBlockNumber	31 - 24
0x8320	ManualSettings_NoSpecifyInq	0
0x8320	ManualSettings_ManualInq	1
0x8320	ManualSettings_AutoInq	2
0x8320	ManualSettings_AutoOnceInq	3
0x8320	ManualSettings_DefaultInq	4
0x8320	ManualSettings_ValueType	23 - 16
0x8320	ManualSettings_Readable	24
0x8320	ManualSettings_Writable	25
0x8320	ManualSettings_UserSetLoadable	26
0x8320	ManualSettings_Active	30
0x8320	ManualSettings_Implemented	31
0x8324	ManualSettings_OffsetForExpanded	31 - 0
0x8328	ManualSettings_Control	3 - 0
0x832c	ManualSettings_NumberOfElements	30 - 0
0x832c	ManualSettings_MoreDimension	31
0x8344	ManualSettings_software_rst	0
0x8344	ManualSettings_soft_reset_asic	1
0x8400	WordGenerator_SizeOfCategoryBlock	23 - 0
0x8400	WordGenerator_CategoryBlockNumber	31 - 24
0x8420	WordGenerator_NoSpecifyInq	0
0x8420	WordGenerator_ManualInq	1
0x8420	WordGenerator_AutoInq	2
0x8420	WordGenerator_AutoOnceInq	3
0x8420	WordGenerator_DefaultInq	4
0x8420	WordGenerator_ValueType	23 - 16
0x8420	WordGenerator_Readable	24
0x8420	WordGenerator_Writable	25
0x8420	WordGenerator_UserSetLoadable	26
0x8420	WordGenerator_Active	30
0x8420	WordGenerator_Implemented	31
0x8424	WordGenerator_OffsetForExpanded	31 - 0
0x8428	WordGenerator_Control	3 - 0
0x842c	WordGenerator_NumberOfElements	30 - 0
0x842c	WordGenerator_MoreDimension	31

Copyright © Magics Technologies NV

12.2 Detailed Register Map : configuration registers

12.2.1 Register (Address 0x723c) type: State

#	Setting		Register 32bit	
0	AcquisitionCommand_Value			3 - 0
#	Default Value	Logic	Info	
0	0b1000		1: Stop 8: Continuous 9: MultiFrame	

12.2.2 Register (Address 0x725c) type: Configuration

#	Setting		Register 32bit	
0	AcquisitionFrameCount_Value			15 - 0
#	Default Value	Logic	Info	
0	0b0000000000000001		Default number of frames in MultiFrame (burst) mode	

12.2.3 Register (Address 0x72bc) type: Configuration

#	Setting		Register 32bit	
0	AcquisitionFrameRate_Value			8 - 0
#	Default Value	Logic	Info	
0	0b000000101		Default frame rate at start up	

12.2.4 Register (Address 0x7394) type: Configuration

#	Setting		Register 32bit	
0	ImageSize_OffsetX			10 - 0
#	Default Value	Logic	Info	
0	0b00101000000	Active_High	Offset in the x direction	

12.2.5 Register (Address 0x7398) type: Configuration

#	Setting		Register 32bit	
0	ImageSize_Width			10 - 0
#	Default Value	Logic	Info	
0	0b10100000000	Active_High	Width of the image	

Preliminary / Confidential

12.2.6 Register (Address 0x739c) type: Configuration

#	Setting		Register 32bit	
0	ImageSize_OffsetY			10 - 0
#	Default Value	Logic	Info	
0	0b00011010100	Active_High	Offset in the Y direction	

12.2.7 Register (Address 0x73a0) type: Configuration

#	Setting		Register 32bit	
0	ImageSize_Height			10 - 0
#	Default Value	Logic	Info	
0	0b01011010000	Active_High	Height of the image	

12.2.8 Register (Address 0x73fc) type: Configuration

#	Setting		Register 32bit	
0	PixelSize_Value			3 - 0
#	Default Value	Logic	Info	
0	0b1010	Active_High	8: represents that the imager is outputting 8-bit 10: represents that the imager is outputting 10-bit 12: represents that the imager is outputting 12-bit	

12.2.9 Register (Address 0x747c) type: Configuration

#	Setting		Register 32bit	
0	DecimationHorizontal_Value			1 - 0
#	Default Value	Logic	Info	
0	0b00		Current sub sampling rate, default "0" --> Subsampling off	

12.2.10 Register (Address 0x749c) type: Configuration

#	Setting		Register 32bit	
0	DecimationVertical_Value			1 - 0
#	Default Value	Logic	Info	
0	0b00		Current sub sampling rate, default "0" --> Subsampling off	

Preliminary

12.2.11 Register (Address 0x74b0) type: Configuration

#	Setting		Register 32bit	
0	ReverseX_Value			0
#	**Default Value**	**Logic**	**Info**	
0	0b0		0: No reverse in X direction (default) 1: Reverse in X direction	

12.2.12 Register (Address 0x74d0) type: Configuration

#	Setting		Register 32bit	
0	ReverseY_Value			0
#	**Default Value**	**Logic**	**Info**	
0	0b0		0: No reverse in Y direction (default) 1: Reverse in Y direction	

12.2.13 Register (Address 0x74fc) type: Configuration

#	Setting		Register 32bit
0	TestPattern_Value		31 - 0
#	**Default Value**	**Logic**	**Info**
0	0b00000000000000000000000000000000		0: Image from the pixel array (default) 1: Black test image 2: White test image 3: Grey55 test image 4: GreyAA test image 16: GrayHorizontalRamp 17: GrayVerticalRamp 48: ColorBar 49: GreyScaleChart 120: VendorSpecific0 test image 121: VendorSpecific1 test image 122: VendorSpecific2 test image 123: VendorSpecific3 test image 124: VendorSpecific4 test image 125: VendorSpecific5 test image

Preliminary

12.2.14 Register (Address 0x753c) type: Configuration

#	Setting		Register 32bit	
0	ExposureTime_Value			17 - 0
#	Default Value	Logic	Info	
0	0b000010011100010000	Active_High	Default is 10ms after startup	

12.2.15 Register (Address 0x783c) type: Configuration

#	Setting		Register 32bit	
0	TriggerMode_Value			0
#	Default Value	Logic	Info	
0	0b0		Default "0": off, "1" trigger enabled	

12.2.16 Register (Address 0x787c) type: Configuration

#	Setting		Register 32bit	
0	TriggerSource_Value			6 - 0
#	Default Value	Logic	Info	
0	0b1111000		64: Software trigger 120: External pin as trigger	

12.2.17 Register (Address 0x789c) type: Configuration

#	Setting		Register 32bit	
0	TriggerAdditionalParameter_Value			15 - 0
#	Default Value	Logic	Info	
0	0b0000000000000001		Default 1 frame at trigger	

12.2.18 Register (Address 0x78dc) type: Trigger_register

#	Setting		Register 32bit	
0	SoftwareTrigger_Value			0
#	Default Value	Logic	Info	
0	0b0		0: Software trigger inactive 1: Software trigger active	

Preliminary/Confidential

12.2.19 Register (Address 0x8234) type: Configuration

#	Setting		Register 32bit
0	AnalogTrimming_idiv_ctrl		4 - 3
1	AnalogTrimming_sdr_clk_ctrl		27 - 25
2	AnalogTrimming_cntr_clk_ctrl		31 - 29
#	**Default Value**	**Logic**	**Info**
0	0b01	Active_High	Controls input divider division ratio
1	0b000	Active_High	Controls output data clock frequency
2	0b000	Active_High	Controls counter clock frequency

12.2.20 Register (Address 0x825c) type: Configuration

#	Setting		Register 32bit
0	AnalogTrimming_pclk_edge		6 - 5
#	**Default Value**	**Logic**	**Info**
0	0b00	Active_High	Invert synchronization between PIXCLK and output data 0: Sync on positive edge 1:Sync on negative edge

12.2.21 Register (Address 0x8344) type: -

#	Setting		Register 32bit
0	ManualSettings_software_rst		0
1	ManualSettings_soft_reset_asic		1
#	**Default Value**	**Logic**	**Info**
0	0b0	Active_High	Soft reset for the registers
1	0b1	Active_High	Soft reset for the digital blocks

Preliminary/Confidential

12.3 Detailed register map: constant registers

Constants MAG-IMG002X1					
0x0000	ChipId	31 - 0	0b00000000000000000000000010010010	Active_High	Chip ID
0x6000	IIDC2EntryImager_Keyword	31 - 0	0b01001001010010010100010001000011	Active_High	This indicates the start of the IIDC2Entry with the keyword ("IIDC") in ASCI
0x6004	IIDC2EntryImager_SubMinorVersionNumber	7 - 0	0b00000000	Active_High	Indicates the version of IIDC specification
0x6004	IIDC2EntryImager_MinorVersionNumber	15 - 8	0b00000010	Active_High	Indicates the version of IIDC specification
0x6004	IIDC2EntryImager_MajorVersionNumber	23 - 16	0b00010000	Active_High	Indicates the version of IIDC specification
0x6008	IIDC2EntryImager_NumberOfCategoryBlocks	15 - 0	0b0000000001000001	Active_High	Indicates the number of CategoryBlock a device has. It includes reserved space.
0x6010	IIDC2EntryImager_OffsetForXmlManifestTable	31 - 0	0b00000000000000000000000000000000	Active_High	Indicates offset address of XML Manifest table, if transport layer has no XML. (CxP does)
0x6020	IIDC2EntryImager_DeviceControl	31 - 0	0b00000000000000000000000000000000	Active_High	CategoryBlockN (N=0-31) starts at IIDC2Entry address + OffsetForCategoryBlockN value
0x6024	IIDC2EntryImager_TransportLayerControl	31 - 0	0b00000000000000000000000000000000	Active_High	CategoryBlockN (N=0-31) starts at IIDC2Entry address + OffsetForCategoryBlockN value
0x6028	IIDC2EntryImager_ImageFormatControl	31 - 0	0b00000000000000000111001100000000	Active_High	CategoryBlockN (N=0-31) starts at IIDC2Entry address + OffsetForCategoryBlockN value
0x602c	IIDC2EntryImager_AcquisitionControl	31 - 0	0b00000000000000000111001000000000	Active_High	CategoryBlockN (N=0-31) starts at IIDC2Entry address + OffsetForCategoryBlockN value
0x6030	IIDC2EntryImager_LuminanceControl	31 - 0	0b00000000000000000111010100000000	Active_High	CategoryBlockN (N=0-31) starts at IIDC2Entry address + OffsetForCategoryBlockN value
0x6034	IIDC2EntryImager_ChromaControl	31 - 0	0b00000000000000000000000000000000	Active_High	CategoryBlockN (N=0-31) starts at IIDC2Entry address + OffsetForCategoryBlockN value
0x6038	IIDC2EntryImager_LUTControl	31 - 0	0b00000000000000000000000000000000	Active_High	CategoryBlockN (N=0-31) starts at IIDC2Entry address + OffsetForCategoryBlockN value
0x603c	IIDC2EntryImager_TriggerControl	31 - 0	0b00000000000000000111100000000000	Active_High	CategoryBlockN (N=0-31) starts at IIDC2Entry address + OffsetForCategoryBlockN value
0x6040	IIDC2EntryImager_UserSetControl	31 - 0	0b00000000000000000000000000000000	Active_High	CategoryBlockN (N=0-31) starts at IIDC2Entry address + OffsetForCategoryBlockN value
0x6044	IIDC2EntryImager_DigitalIOControl	31 - 0	0b00000000000000000000000000000000	Active_High	CategoryBlockN (N=0-31) starts at IIDC2Entry address + OffsetForCategoryBlockN value
0x6048	IIDC2EntryImager_CounterAndTimerControl	31 - 0	0b00000000000000000000000000000000	Active_High	CategoryBlockN (N=0-31) starts at IIDC2Entry address + OffsetForCategoryBlockN value
0x604c	IIDC2EntryImager_EventControl	31 - 0	0b00000000000000000000000000000000	Active_High	CategoryBlockN (N=0-31) starts at IIDC2Entry address + OffsetForCategoryBlockN value
0x6050	IIDC2EntryImager_ChunkControl	31 - 0	0b00000000000000000000000000000000	Active_High	CategoryBlockN (N=0-31) starts at IIDC2Entry address + OffsetForCategoryBlockN value
0x6054	IIDC2EntryImager_LightControl	31 - 0	0b00000000000000000000000000000000	Active_High	CategoryBlockN (N=0-31) starts at IIDC2Entry address + OffsetForCategoryBlockN value
0x6080	IIDC2EntryImager_VendorUniqueControl1	31 - 0	0b00000000000000001000001000000000	Active_High	CategoryBlockN (N=0-31) starts at IIDC2Entry address + OffsetForCategoryBlockN value
0x6084	IIDC2EntryImager_VendorUniqueControl2	31 - 0	0b00000000000000001000001100000000	Active_High	CategoryBlockN (N=0-31) starts at IIDC2Entry address + OffsetForCategoryBlockN value
0x6088	IIDC2EntryImager_VendorUniqueControl3	31 - 0	0b00000000000000001000010000000000	Active_High	CategoryBlockN (N=0-31) starts at IIDC2Entry address + OffsetForCategoryBlockN value
0x608c	IIDC2EntryImager_VendorUniqueControl4	31 - 0	0b00000000000000000000000000000000	Active_High	CategoryBlockN (N=0-31) starts at IIDC2Entry address + OffsetForCategoryBlockN value
0x6090	IIDC2EntryImager_VendorUniqueControl5	31 - 0	0b00000000000000000000000000000000	Active_High	CategoryBlockN (N=0-31) starts at IIDC2Entry address + OffsetForCategoryBlockN value
0x6094	IIDC2EntryImager_VendorUniqueControl6	31 - 0	0b00000000000000000000000000000000	Active_High	CategoryBlockN (N=0-31) starts at IIDC2Entry address + OffsetForCategoryBlockN value
0x6098	IIDC2EntryImager_VendorUniqueControl7	31 - 0	0b00000000000000000000000000000000	Active_High	CategoryBlockN (N=0-31) starts at IIDC2Entry address + OffsetForCategoryBlockN value
0x609c	IIDC2EntryImager_VendorUniqueControl8	31 - 0	0b00000000000000000000000000000000	Active_High	CategoryBlockN (N=0-31) starts at IIDC2Entry address + OffsetForCategoryBlockN value
0x7200	AcquisitionControl_SizeOfCategoryBlock	23 - 0	0b000000000000000011100000	Active_High	Indicates the total size of the Category including the header
0x7200	AcquisitionControl_CategoryBlockNumber	31 - 24	0b00000011	Active_High	Indicates the CategoryNumber
0x7220	AcquisitionCommand_ValueType	23 - 16	0b00000011		ValueType is an Enumeration
0x7220	AcquisitionCommand_Readable	24 - 24	0b1		BasicCSR is readable
0x7220	AcquisitionCommand_Writable	25 - 25	0b1		BasicCSR is writable
0x7220	AcquisitionCommand_UserSetLoadable	26 - 26	0b0		-
0x7220	AcquisitionCommand_Active	30 - 30	0b1		Feature is active
0x7220	AcquisitionCommand_Implemented	31 - 31	0b1	Active_High	BasicCSR is implemented

Copyright © Magics Technologies NV

MAG-IMG002X1-NC – Full HD CMOS rad-hard image sensor

0x7224	AcquisitionCommand_OffsetForExpanded	31 - 0	0b00000000000000000000000000000000		-
0x7228	AcquisitionCommand_Control	3 - 0	0b0001		Manual control is selected
0x7238	AcquisitionCommand_Abort	0 - 0	0b0		Isn't supported
0x7238	AcquisitionCommand_Stop	1 - 1	0b1		Stop capturing and transferring data after current transmitting frame is finished
0x7238	AcquisitionCommand_Continuous	8 - 8	0b1		Start capturing and transferring data continuously
0x7238	AcquisitionCommand_MultiFrame	9 - 9	0b1		Start capturing and transferring multiple frames. The number of capturing / transferring frames are defined by AcquisitionFrameCount. After transmission is finished, this field turns to Stop
0x7238	AcquisitionCommand_ImageBufferRead	10 - 10	0b0		Isn't supported
0x7238	AcquisitionCommand_Retransmit	16 - 16	0b0		Isn't supported
0x7240	AcquisitionFrameCount_ValueType	23 - 16	0b00110000		Integer32
0x7240	AcquisitionFrameCount_Readable	24 - 24	0b1		BasicCSR is readable
0x7240	AcquisitionFrameCount_Writable	25 - 25	0b1		BasicCSR is writable
0x7240	AcquisitionFrameCount_UserSetLoadable	26 - 26	0b0		-
0x7240	AcquisitionFrameCount_Active	30 - 30	0b1		Feature is active
0x7240	AcquisitionFrameCount_Implemented	31 - 31	0b1	Active_High	BasicCSR is implemented
0x7244	AcquisitionFrameCount_OffsetForExpanded	31 - 0	0b00000000000000000000000000000000		-
0x7248	AcquisitionFrameCount_Control	31 - 0	0b00000000000000000000000000000001		Manual control is selected
0x7254	AcquisitionFrameCount_Min	31 - 0	0b00000000000000000000000000000001		Minimum frame count
0x7258	AcquisitionFrameCount_Max	31 - 0	0b00000000000000001111111111111111		Maximum frame count
0x7260	ImageBufferMode_Implemented	31 - 31	0b0	Active_High	BasicCSR is not implemented
0x7280	ImageBufferFrameCount_Implemented	31 - 31	0b0	Active_High	BasicCSR is not implemented
0x72a0	AcquisitionFrameRate_NoSpecifyInq	0 - 0	0b0		Device can't set the value to device specific values
0x72a0	AcquisitionFrameRate_ManualInq	1 - 1	0b1		Manual control is supported
0x72a0	AcquisitionFrameRate_DefaultInq	4 - 4	0b0		Loading the default value in the register again isn't possible
0x72a0	AcquisitionFrameRate_ValueType	23 - 16	0b00110000		Integer32
0x72a0	AcquisitionFrameRate_Readable	24 - 24	0b1		BasicCSR is readable
0x72a0	AcquisitionFrameRate_Writable	25 - 25	0b1		BasicCSR is writable
0x72a0	AcquisitionFrameRate_UserSetLoadable	26 - 26	0b0		-
0x72a0	AcquisitionFrameRate_Active	30 - 30	0b1		Feature is active
0x72a0	AcquisitionFrameRate_Implemented	31 - 31	0b1	Active_High	BasicCSR is implemented
0x72a4	AcquisitionFrameRate_OffsetForExpanded	31 - 0	0b00000000000000000000000000000000		-
0x72a8	AcquisitionFrameRate_Control	3 - 0	0b0001		Manual control is selected
0x72ac	AcquisitionFrameRate_Mult	31 - 0	0b00000000000000000000000000000001		Frame rate step
0x72b0	AcquisitionFrameRate_Div	31 - 0	0b00000000000000000000000000000001		Frame rate step
0x72b4	AcquisitionFrameRate_Min	31 - 0	0b00000000000000000000000000000101		Minimum frame rate
0x72b8	AcquisitionFrameRate_Max	31 - 0	0b00000000000000000000000100101100		Maximum Frame Rate
0x72c0	AcquisitionFrameInterval_Implemented	31 - 31	0b0	Active_High	BasicCSR is not implemented
0x7300	ImageFormatControl_SizeOfCategoryBlock	23 - 0	0b000000000000001000000000	Active_High	Indicates the total size of the Category including the header
0x7300	ImageFormatControl_CategoryBlockNumber	31 - 24	0b00000010	Active_High	Indicates the CategoryNumber
0x7320	ImageFormatSelector_Implemented	31 - 31	0b0	Active_High	BasicCSR is not implemented

Copyright © Magics Technologies NV

MAG-IMG002X1-NC – Full HD CMOS rad-hard image sensor

0x7340	ApplyImageFormat_Implemented	31 - 31	0b0	Active_High	BasicCSR is not implemented
0x7360	ImageSize_NoSpecifyInq	0 - 0	0b0	Active_High	Device can't set the value to device specific values
0x7360	ImageSize_ManualInq	1 - 1	0b1	Active_High	Manual control is supported
0x7360	ImageSize_AutoInq	2 - 2	0b0	Active_High	Auto adjustment by the device isn't possible
0x7360	ImageSize_AutoOnceInq	3 - 3	0b0	Active_High	Auto adjustment by the device only once isn't possible
0x7360	ImageSize_DefaultInq	4 - 4	0b0	Active_High	Loading the default value in the register again isn't possible
0x7360	ImageSize_ValueType	23 - 16	0b00110101	Active_High	ValueType is an Rectangle32
0x7360	ImageSize_Readable	24 - 24	0b1	Active_High	BasicCSR is readable
0x7360	ImageSize_Writable	25 - 25	0b1	Active_High	BasicCSR is writable
0x7360	ImageSize_UserSetLoadable	26 - 26	0b0	Active_High	-
0x7360	ImageSize_Active	30 - 30	0b1	Active_High	Feature is active
0x7360	ImageSize_Implemented	31 - 31	0b1	Active_High	BasicCSR is implemented
0x7364	ImageSize_OffsetForExpanded	31 - 0	0b00000000000000000000000000000000	Active_High	-
0x7368	ImageSize_Control	3 - 0	0b0001	Active_High	Manual control is selected
0x736c	ImageSize_MinOffsetX	31 - 0	0b00000000000000000000000000000000	Active_High	The minimum offset is 0
0x7370	ImageSize_IncOffsetX	31 - 0	0b00000000000000000000000000000010	Active_High	This is always 2, inheretant to the design of the ASIC
0x7374	ImageSize_MinWidth	31 - 0	0b00000000000000000000001010000000	Active_High	Minimum image width
0x7378	ImageSize_IncWidth	31 - 0	0b00000000000000000000000000000010	Active_High	This is always 2, inheretant to the design of the ASIC
0x737c	ImageSize_TotalSizeX	31 - 0	0b00000000000000000000011110000000	Active_High	The max size in X direction / width is 1920
0x7380	ImageSize_MinOffsetY	31 - 0	0b00000000000000000000000000000000	Active_High	The minimum offset is 0
0x7388	ImageSize_MinHeight	31 - 0	0b00000000000000000000000111100000	Active_High	Minimum image Height
0x7390	ImageSize_TotalSizeY	31 - 0	0b00000000000000000000010001111000	Active_High	Total Y / Height is normal pixels + black pixels: 1080 + 32 + 32 = 1144
0x73c0	PixelCoding_NoSpecifyInq	0 - 0	0b0	Active_High	Device can't set the value to device specific values
0x73c0	PixelCoding_ManualInq	1 - 1	0b1	Active_High	Manual control is supported
0x73c0	PixelCoding_AutoInq	2 - 2	0b0	Active_High	Auto adjustment by the device isn't possible
0x73c0	PixelCoding_AutoOnceInq	3 - 3	0b0	Active_High	Auto adjustment by the device only once isn't possible
0x73c0	PixelCoding_DefaultInq	4 - 4	0b0	Active_High	Loading the default value in the register again isn't possible
0x73c0	PixelCoding_ValueType	23 - 16	0b00000011	Active_High	ValueType is an Enumeration
0x73c0	PixelCoding_Readable	24 - 24	0b1	Active_High	BasicCSR is readable
0x73c0	PixelCoding_Writable	25 - 25	0b1	Active_High	BasicCSR is writable
0x73c0	PixelCoding_UserSetLoadable	26 - 26	0b0	Active_High	-
0x73c0	PixelCoding_Active	30 - 30	0b1	Active_High	BasicCSR is active
0x73c0	PixelCoding_Implemented	31 - 31	0b1	Active_High	BasicCSR is implemented
0x73c4	PixelCoding_OffsetForExpanded	31 - 0	0b00000000000000000000000000000000	Active_High	-
0x73c8	PixelCoding_Control	3 - 0	0b0001	Active_High	Manual control is selected
0x73cc	PixelCoding_BayerGRPacked	3 - 3	0b0	Active_High	Isn't supported
0x73cc	PixelCoding_BayerRGPacked	6 - 6	0b0	Active_High	Isn't supported
0x73cc	PixelCoding_BayerGBPacked	9 - 9	0b0	Active_High	Isn't supported
0x73cc	PixelCoding_BayerBGPacked	12 - 12	0b0	Active_High	Isn't supported
0x73d0	PixelCoding_YUV411Packed	4 - 4	0b0	Active_High	Isn't supported
0x73d0	PixelCoding_YUV422Packed	12 - 12	0b0	Active_High	Isn't supported

Copyright © Magics Technologies NV

MAG-IMG002X1-NC – Full HD CMOS rad-hard image sensor

0x73d0	PixelCoding_YUV444Packed	20 - 20	0b0	Active_High	Isn't supported
0x73d4	PixelCoding_RGBPacked	2 - 2	0b0	Active_High	Isn't supported
0x73d4	PixelCoding_BGRPacked	10 - 10	0b0	Active_High	Isn't supported
0x73d8	PixelCoding_Mono	0 - 0	0b1	Active_High	Is supported
0x73d8	PixelCoding_MonoSigned	1 - 1	0b0	Active_High	Isn't supported
0x73d8	PixelCoding_MonoPacked	2 - 2	0b0	Active_High	Isn't supported
0x73e0	PixelSize_NoSpecifyInq	0 - 0	0b0	Active_High	Device can't set the value to device specific values
0x73e0	PixelSize_ManualInq	1 - 1	0b1	Active_High	Manual control is supported
0x73e0	PixelSize_AutoInq	2 - 2	0b0	Active_High	Auto adjustment by the device isn't possible
0x73e0	PixelSize_AutoOnceInq	3 - 3	0b0	Active_High	Auto adjustment by the device only once isn't possible
0x73e0	PixelSize_DefaultInq	4 - 4	0b0	Active_High	Loading the default value in the register again isn't possible
0x73e0	PixelSize_ValueType	23 - 16	0b00000011	Active_High	ValueType is an Enumeration
0x73e0	PixelSize_Readable	24 - 24	0b1	Active_High	BasicCSR is readable
0x73e0	PixelSize_Writable	25 - 25	0b1	Active_High	BasicCSR is writable
0x73e0	PixelSize_UserSetLoadable	26 - 26	0b0	Active_High	-
0x73e0	PixelSize_Active	30 - 30	0b1	Active_High	Feature is active
0x73e0	PixelSize_Implemented	31 - 31	0b1	Active_High	BasicCSR is implemented
0x73e4	PixelSize_OffsetForExpanded	31 - 0	0b00000000000000000000000000000000	Active_High	-
0x73e8	PixelSize_Control	3 - 0	0b0001	Active_High	Manual control is selected
0x73f4	PixelSize_Bpp48	16 - 16	0b0	Active_High	48-bit output isn't supported
0x73f8	PixelSize_Bpp8	8 - 8	0b1	Active_High	8-bit output is supported
0x73f8	PixelSize_Bpp10	10 - 10	0b1	Active_High	10-bit output is supported
0x73f8	PixelSize_Bpp12	12 - 12	0b1	Active_High	12-bit output is supported
0x73f8	PixelSize_Bpp14	14 - 14	0b0	Active_High	14-bit output isn't supported
0x73f8	PixelSize_Bpp16	16 - 16	0b0	Active_High	16-bit output isn't supported
0x73f8	PixelSize_Bpp24	24 - 24	0b0	Active_High	24-bit output isn't supported
0x7400	PixelEndian_Implemented	31 - 31	0b0	Active_High	BasicCSR is not implemented
0x7420	BinningHorizontal_Implemented	31 - 31	0b0	Active_High	BasicCSR is not implemented
0x7440	BinningVertical_Implemented	31 - 31	0b0	Active_High	BasicCSR is not implemented
0x7460	DecimationHorizontal_NoSpecifyInq	0 - 0	0b0		Device can't set the value to device specific values
0x7460	DecimationHorizontal_ManualInq	1 - 1	0b1		Manual control is supported
0x7460	DecimationHorizontal_AutoInq	2 - 2	0b0		Auto adjustment by the device isn't possible
0x7460	DecimationHorizontal_AutoOnceInq	3 - 3	0b0		Auto adjustment by the device only once isn't possible
0x7460	DecimationHorizontal_DefaultInq	4 - 4	0b0		Loading the default value in the register again isn't possible
0x7460	DecimationHorizontal_ValueType	23 - 16	0b00110000		Integer32
0x7460	DecimationHorizontal_Readable	24 - 24	0b1		BasicCSR is readable
0x7460	DecimationHorizontal_Writable	25 - 25	0b1		BasicCSR is writable
0x7460	DecimationHorizontal_UserSetLoadable	26 - 26	0b0		-
0x7460	DecimationHorizontal_Active	30 - 30	0b1		Feature is active
0x7460	DecimationHorizontal_Implemented	31 - 31	0b1	Active_High	BasicCSR is implemented
0x7464	DecimationHorizontal_OffsetForExpanded	31 - 0	0b00000000000000000000000000000000		-

Copyright © Magics Technologies NV

MAG-IMG002X1-NC – Full HD CMOS rad-hard image sensor

0x7468	DecimationHorizontal_Control	3 - 0	0b0001		Manual control is selected
0x746c	DecimationHorizontal_Mult	31 - 0	0b00000000000000000000000000000010		In steps of 2 pixels at a time, depending on colo_mono pad
0x7470	DecimationHorizontal_Div	31 - 0	0b00000000000000000000000000000010		In steps of 2 pixels at a time, depending on colo_mono pad
0x7474	DecimationHorizontal_Min	31 - 0	0b00000000000000000000000000000000		Minimum subsampling rate, 0 (sub sampling off)
0x7478	DecimationHorizontal_Max	31 - 0	0b00000000000000000000000000001000		Maximum sub sampling rate that will be supported is 8 (2 bits)
0x7480	DecimationVertical_NoSpecifyInq	0 - 0	0b0		Device can't set the value to device specific values
0x7480	DecimationVertical_ManualInq	1 - 1	0b1		Manual control is supported
0x7480	DecimationVertical_AutoInq	2 - 2	0b0		Auto adjustment by the device isn't possible
0x7480	DecimationVertical_AutoOnceInq	3 - 3	0b0		Auto adjustment by the device only once isn't possible
0x7480	DecimationVertical_DefaultInq	4 - 4	0b0		Loading the default value in the register again isn't possible
0x7480	DecimationVertical_ValueType	23 - 16	0b00110000		Integer32
0x7480	DecimationVertical_Readable	24 - 24	0b1		BasicCSR is readable
0x7480	DecimationVertical_Writable	25 - 25	0b1		BasicCSR is writable
0x7480	DecimationVertical_UserSetLoadable	26 - 26	0b0		-
0x7480	DecimationVertical_Active	30 - 30	0b1		Feature is active
0x7480	DecimationVertical_Implemented	31 - 31	0b1	Active_High	BasicCSR is implemented
0x7484	DecimationVertical_OffsetForExpanded	31 - 0	0b00000000000000000000000000000000		-
0x7488	DecimationVertical_Control	3 - 0	0b0001		Manual control is selected
0x748c	DecimationVertical_Mult	31 - 0	0b00000000000000000000000000000010		In steps of 2 pixels at a time, depending on colo_mono pad
0x7490	DecimationVertical_Div	31 - 0	0b00000000000000000000000000000010		In steps of 2 pixels at a time, depending on colo_mono pad
0x7494	DecimationVertical_Min	31 - 0	0b00000000000000000000000000000000		Minimum subsampling rate, 0 (sub sampling off)
0x7498	DecimationVertical_Max	31 - 0	0b00000000000000000000000000001000		Maximum sub sampling rate that will be supported is 8 (2 bits)
0x74a0	ReverseX_NoSpecifyInq	0 - 0	0b0		Device can't set the value to device specific values
0x74a0	ReverseX_ManualInq	1 - 1	0b1		Manual control is supported
0x74a0	ReverseX_AutoInq	2 - 2	0b0		Auto adjustment by the device isn't possible
0x74a0	ReverseX_AutoOnceInq	3 - 3	0b0		Auto adjustment by the device only once isn't possible
0x74a0	ReverseX_DefaultInq	4 - 4	0b0		Loading the default value in the register again isn't possible
0x74a0	ReverseX_ValueType	23 - 16	0b00110100		BulkBoolean32
0x74a0	ReverseX_Readable	24 - 24	0b1		BasicCSR is readable
0x74a0	ReverseX_Writable	25 - 25	0b1		BasicCSR is writable
0x74a0	ReverseX_UserSetLoadable	26 - 26	0b0		-
0x74a0	ReverseX_Active	30 - 30	0b1		Feature is active
0x74a0	ReverseX_Implemented	31 - 31	0b1	Active_High	BasicCSR is implemented
0x74a4	ReverseX_OffsetForExpanded	31 - 0	0b00000000000000000000000000000000		-
0x74a8	ReverseX_Control	3 - 0	0b0001		Manual control is selected
0x74ac	ReverseX_BitWritable	0 - 0	0b1		Indicates that ReverseX is writable
0x74c0	ReverseY_NoSpecifyInq	0 - 0	0b0		Device can't set the value to device specific values
0x74c0	ReverseY_ManualInq	1 - 1	0b1		Manual control is supported
0x74c0	ReverseY_AutoInq	2 - 2	0b0		Auto adjustment by the device isn't possible
0x74c0	ReverseY_AutoOnceInq	3 - 3	0b0		Auto adjustment by the device only once isn't possible
0x74c0	ReverseY_DefaultInq	4 - 4	0b0		Loading the default value in the register again isn't possible

Copyright © Magics Technologies NV

MAG-IMG002X1-NC – Full HD CMOS rad-hard image sensor

0x74c0	ReverseY_ValueType	23 - 16	0b00110100		BulkBoolean32
0x74c0	ReverseY_Readable	24 - 24	0b1		BasicCSR is readable
0x74c0	ReverseY_Writable	25 - 25	0b1		BasicCSR is writable
0x74c0	ReverseY_UserSetLoadable	26 - 26	0b0		-
0x74c0	ReverseY_Active	30 - 30	0b1		Feature is active
0x74c0	ReverseY_Implemented	31 - 31	0b1	Active_High	BasicCSR is implemented
0x74c4	ReverseY_OffsetForExpanded	31 - 0	0b00000000000000000000000000000000		-
0x74c8	ReverseY_Control	3 - 0	0b0001		Manual control is selected
0x74cc	ReverseY_BitWritable	0 - 0	0b1		Indicates that ReverseY is writable
0x74e0	TestPattern_NoSpecifyInq	0 - 0	0b0		Device can't set the value to device specific values
0x74e0	TestPattern_ManualInq	1 - 1	0b1		Manual control is supported
0x74e0	TestPattern_AutoInq	2 - 2	0b0		Auto adjustment by the device isn't possible
0x74e0	TestPattern_AutoOnceInq	3 - 3	0b0		Auto adjustment by the device only once isn't possible
0x74e0	TestPattern_DefaultInq	4 - 4	0b0		Loading the default value in the register again isn't possible
0x74e0	TestPattern_ValueType	23 - 16	0b00000011		ValueType is an Enumeration
0x74e0	TestPattern_Readable	24 - 24	0b1		BasicCSR is readable
0x74e0	TestPattern_Writable	25 - 25	0b1		BasicCSR is writable
0x74e0	TestPattern_UserSetLoadable	26 - 26	0b0		-
0x74e0	TestPattern_Active	30 - 30	0b1		Feature is active
0x74e0	TestPattern_Implemented	31 - 31	0b1	Active_High	BasicCSR is implemented
0x74e4	TestPattern_OffsetForExpanded	31 - 0	0b00000000000000000000000000000000		-
0x74e8	TestPattern_Control	3 - 0	0b0001		Manual control is selected
0x74ec	TestPattern_VendorSpecific0	24 - 24	0b1		
0x74ec	TestPattern_VendorSpecific1	25 - 25	0b1		
0x74ec	TestPattern_VendorSpecific2	26 - 26	0b1		
0x74ec	TestPattern_VendorSpecific3	27 - 27	0b1		
0x74ec	TestPattern_VendorSpecific4	28 - 28	0b1		
0x74ec	TestPattern_VendorSpecific5	29 - 29	0b1		Supported
0x74ec	TestPattern_VendorSpecific6	30 - 30	0b0		Isn't supported
0x74ec	TestPattern_VendorSpecific7	31 - 31	0b0		Isn't supported
0x74f4	TestPattern_GreyHorizontalRampMoving	0 - 0	0b0		Isn't supported by device
0x74f4	TestPattern_GreyVerticalRampMoving	1 - 1	0b0		Isn't supported by device
0x74f4	TestPattern_HorizontalMoving	8 - 8	0b0		Isn't supported by device
0x74f4	TestPattern_VerticalLineMoving	9 - 9	0b0		Isn't supported
0x74f4	TestPattern_GreyScaleChart	17 - 17	0b1		Indicates that the imager can send a GreyScaleChart test image
0x74f8	TestPattern_Off	0 - 0	0b1		Indicates that the imager can send real life images
0x74f8	TestPattern_Black	1 - 1	0b1		Indicates that the imager can send a Black test image
0x74f8	TestPattern_White	2 - 2	0b1		Indicates that the imager can send a White test image
0x74f8	TestPattern_Grey55	3 - 3	0b1		Indicates that the imager can send a Grey55 test image
0x74f8	TestPattern_GreyAA	4 - 4	0b1		Indicates that the imager can send a GreyAA test image
0x74f8	TestPattern_GreyHorizontalRamp	16 - 16	0b1		Indicates that the imager can send a GreyHorizontalRamp test image

Copyright © Magics Technologies NV

MAG-IMG002X1-NC – Full HD CMOS rad-hard image sensor

0x74f8	TestPattern_GreyVerticalRamp	17 - 17	0b1		Indicates that the imager can send a GreyVerticalRamp test image
0x74f8	TestPattern_StraightCounter	24 - 24	0b0		Isn't supported by device
0x7500	LuminanceControl_SizeOfCategoryBlock	23 - 0	0b000000000000000000011100000	Active_High	Indicates the total size of the Category including the header
0x7500	LuminanceControl_CategoryBlockNumber	31 - 24	0b00000100	Active_High	Indicates the CategoryNumber
0x7520	ExposureTime_NoSpecifyInq	0 - 0	0b0	Active_High	Device can't set the value to device specific values
0x7520	ExposureTime_ManualInq	1 - 1	0b1	Active_High	Manual control is supported
0x7520	ExposureTime_AutoInq	2 - 2	0b0	Active_High	Auto adjustment by the device isn't possible
0x7520	ExposureTime_AutoOnceInq	3 - 3	0b0	Active_High	Auto adjustment by the device only once isn't possible
0x7520	ExposureTime_DefaultInq	4 - 4	0b0	Active_High	Loading the default value in the register again isn't possible
0x7520	ExposureTime_ValueType	23 - 16	0b00110000	Active_High	BasicCSR is from the type "Integer32"
0x7520	ExposureTime_Readable	24 - 24	0b1	Active_High	BasicCSR is readable
0x7520	ExposureTime_Writable	25 - 25	0b1	Active_High	BasicCSR is writable
0x7520	ExposureTime_UserSetLoadable	26 - 26	0b0	Active_High	-
0x7520	ExposureTime_Active	30 - 30	0b1	Active_High	BasicCSR is active
0x7520	ExposureTime_Implemented	31 - 31	0b1	Active_High	BasicCSR is implemented
0x7524	ExposureTime_OffsetForExpanded	31 - 0	0b00000000000000000000000000000000	Active_High	-
0x7528	ExposureTime_Control	3 - 0	0b0001	Active_High	Manual control is selected
0x7540	BlackLevel_Implemented	31 - 31	0b0	Active_High	BasicCSR is not implemented
0x7560	Gain_Implemented	31 - 31	0b0	Active_High	BasicCSR is not implemented
0x7580	Gamma_Implemented	31 - 31	0b0	Active_High	BasicCSR is not implemented
0x75a0	Sharpness_Implemented	31 - 31	0b0	Active_High	BasicCSR is not implemented
0x75c0	ALCLevel_Implemented	31 - 31	0b0	Active_High	BasicCSR is not implemented
0x7800	TriggerControl_SizeOfCategoryBlock	23 - 0	0b000000000000000000011100000	Active_High	Indicates the total size of the Category including the header
0x7800	TriggerControl_CategoryBlockNumber	31 - 24	0b00000111	Active_High	Indicates the CategoryNumber
0x7820	TriggerMode_ManualInq	1 - 1	0b1		Manual control is supported
0x7820	TriggerMode_DefaultInq	4 - 4	0b0		Loading the default value in the register again isn't possible
0x7820	TriggerMode_ValueType	23 - 16	0b00000011		ValueType is an Enumeration
0x7820	TriggerMode_Readable	24 - 24	0b1		BasicCSR is readable
0x7820	TriggerMode_Writable	25 - 25	0b1		BasicCSR is writable
0x7820	TriggerMode_UserSetLoadable	26 - 26	0b0		-
0x7820	TriggerMode_Active	30 - 30	0b1		Feature is active
0x7820	TriggerMode_Implemented	31 - 31	0b1	Active_High	BasicCSR is implemented
0x7824	TriggerMode_OffsetForExpanded	31 - 0	0b00000000000000000000000000000000		-
0x7828	TriggerMode_Control	3 - 0	0b0001		Manual control is selected
0x782c	TriggerMode_VendorSpecific0	24 - 24	0b0		Not supported by device
0x782c	TriggerMode_VendorSpecific1	25 - 25	0b0		Not supported by device
0x782c	TriggerMode_VendorSpecific2	26 - 26	0b0		Not supported by device
0x782c	TriggerMode_VendorSpecific3	27 - 27	0b0		Not supported by device
0x782c	TriggerMode_VendorSpecific4	28 - 28	0b0		Not supported by device
0x782c	TriggerMode_VendorSpecific5	29 - 29	0b0		Not supported by device
0x782c	TriggerMode_VendorSpecific6	30 - 30	0b0		Not supported by device

Copyright © Magics Technologies NV

MAG-IMG002X1-NC – Full HD CMOS rad-hard image sensor

0x782c	TriggerMode_VendorSpecific7	31 - 31	0b0		Not supported by device
0x7838	TriggerMode_Off	0 - 0	0b1		Supported by device
0x7838	TriggerMode_On	1 - 1	0b1		Supported by device
0x7840	TriggerSequence_ManualInq	1 - 1	0b1		Manual control is supported
0x7840	TriggerSequence_DefaultInq	4 - 4	0b0		Loading the default value in the register again isn't possible
0x7840	TriggerSequence_ValueType	23 - 16	0b00000011		ValueType is an Enumeration
0x7840	TriggerSequence_Readable	24 - 24	0b1		BasicCSR is read-only
0x7840	TriggerSequence_Writable	25 - 25	0b0		Not writable
0x7840	TriggerSequence_UserSetLoadable	26 - 26	0b0		-
0x7840	TriggerSequence_Active	30 - 30	0b1		Feature is active
0x7840	TriggerSequence_Implemented	31 - 31	0b1	Active_High	BasicCSR is implemented
0x7844	TriggerSequence_OffsetForExpanded	31 - 0	0b00000000000000000000000000000000		-
0x7848	TriggerSequence_Control	3 - 0	0b0001		Manual control is selected
0x784c	TriggerSequence_VendorSpecific0	24 - 24	0b0		Not supported by device
0x784c	TriggerSequence_VendorSpecific1	25 - 25	0b0		Not supported by device
0x784c	TriggerSequence_VendorSpecific2	26 - 26	0b0		Not supported by device
0x784c	TriggerSequence_VendorSpecific3	27 - 27	0b0		Not supported by device
0x784c	TriggerSequence_VendorSpecific4	28 - 28	0b0		Not supported by device
0x784c	TriggerSequence_VendorSpecific5	29 - 29	0b0		Not supported by device
0x784c	TriggerSequence_VendorSpecific6	30 - 30	0b0		Not supported by device
0x784c	TriggerSequence_VendorSpecific7	31 - 31	0b0		Not supported by device
0x7858	TriggerSequence_TriggerSequence0	0 - 0	0b0		Not supported by device
0x7858	TriggerSequence_TriggerSequence1	1 - 1	0b0		Not supported by device
0x7858	TriggerSequence_TriggerSequence2	2 - 2	0b0		Not supported by device
0x7858	TriggerSequence_TriggerSequence3	3 - 3	0b0		Not supported by device
0x7858	TriggerSequence_TriggerSequence4	4 - 4	0b0		Not supported by device
0x7858	TriggerSequence_TriggerSequence5	5 - 5	0b0		Not supported by device
0x7858	TriggerSequence_TriggerSequence6	6 - 6	0b1		Burst mode
0x785c	TriggerSequence_Value	31 - 0	0b00000000000000000000000000000110		default value
0x7860	TriggerSource_ManualInq	1 - 1	0b1		Manual control is supported
0x7860	TriggerSource_DefaultInq	4 - 4	0b0		Loading the default value in the register again isn't possible
0x7860	TriggerSource_ValueType	23 - 16	0b00000011		Enumeration
0x7860	TriggerSource_Readable	24 - 24	0b1		BasicCSR is readable
0x7860	TriggerSource_Writable	25 - 25	0b1		BasicCSR is writable
0x7860	TriggerSource_UserSetLoadable	26 - 26	0b0		-
0x7860	TriggerSource_Active	30 - 30	0b1		Feature is active
0x7860	TriggerSource_Implemented	31 - 31	0b1	Active_High	BasicCSR isn't implemented
0x7864	TriggerSource_OffsetForExpanded	31 - 0	0b00000000000000000000000000000000		-
0x7868	TriggerSource_Control	3 - 0	0b0001		Manual control is selected
0x786c	TriggerSource_VendorSpecific0	24 - 24	0b1		External pin as trigger is supported
0x7870	TriggerSource_SoftwareTrigger	0 - 0	0b1		Software trigger is supported

Copyright © Magics Technologies NV

MAG-IMG002X1-NC – Full HD CMOS rad-hard image sensor

0x7880	TriggerAdditionalParameter_ManualInq	1 - 1	0b1		Manual control is supported
0x7880	TriggerAdditionalParameter_DefaultInq	4 - 4	0b0		Loading the default value in the register again isn't possible
0x7880	TriggerAdditionalParameter_ValueType	23 - 16	0b00110000		Integer32
0x7880	TriggerAdditionalParameter_Readable	24 - 24	0b1		BasicCSR is readable
0x7880	TriggerAdditionalParameter_Writable	25 - 25	0b1		BasicCSR is writable
0x7880	TriggerAdditionalParameter_UserSetLoadable	26 - 26	0b0		-
0x7880	TriggerAdditionalParameter_Active	30 - 30	0b1		Feature is active
0x7880	TriggerAdditionalParameter_Implemented	31 - 31	0b1	Active_High	BasicCSR is implemented
0x7884	TriggerAdditionalParameter_OffsetForExpanded	31 - 0	0b00000000000000000000000000000000		-
0x7888	TriggerAdditionalParameter_Control	3 - 0	0b0001		Manual control is selected
0x788c	TriggerAdditionalParameter_Mult	31 - 0	0b00000000000000000000000000000001		
0x7890	TriggerAdditionalParameter_Div	31 - 0	0b00000000000000000000000000000001		
0x7894	TriggerAdditionalParameter_Min	31 - 0	0b00000000000000000000000000000001		Min number of frames to capture at trigger
0x7898	TriggerAdditionalParameter_Max	31 - 0	0b00000000000000010000000000000000		Max number of frames to capture at trigger
0x78a0	TriggerDelay_Implemented	31 - 31	0b0	Active_High	BasicCSR isn't implemented
0x78c0	SoftwareTrigger_ManualInq	1 - 1	0b1		Manual control is supported
0x78c0	SoftwareTrigger_DefaultInq	4 - 4	0b0		Loading the default value in the register again isn't possible
0x78c0	SoftwareTrigger_ValueType	23 - 16	0b00000011		Enumeration
0x78c0	SoftwareTrigger_Readable	24 - 24	0b1		BasicCSR is readable
0x78c0	SoftwareTrigger_Writable	25 - 25	0b1		BasicCSR is writable
0x78c0	SoftwareTrigger_UserSetLoadable	26 - 26	0b0		-
0x78c0	SoftwareTrigger_Active	30 - 30	0b1		Feature is active
0x78c0	SoftwareTrigger_Implemented	31 - 31	0b1	Active_High	BasicCSR isn't implemented
0x78c4	SoftwareTrigger_OffsetForExpanded	31 - 0	0b00000000000000000000000000000000		-
0x78c8	SoftwareTrigger_Control	3 - 0	0b0001		Manual control is selected
0x78d8	SoftwareTrigger_Inactive	0 - 0	0b1		Is supported by device
0x78d8	SoftwareTrigger_Activetable	1 - 1	0b1		Is supported by device
0x8200	AnalogTrimming_SizeOfCategoryBlock	23 - 0	0b000000000000000001111000	Active_High	Indicates the total size of the Category including the header
0x8200	AnalogTrimming_CategoryBlockNumber	31 - 24	0b00011000	Active_High	Indicates the CategoryNumber
0x8220	AnalogTrimming_NoSpecifyInq	0 - 0	0b0	Active_High	Device can't set the value to device specific values
0x8220	AnalogTrimming_ManualInq	1 - 1	0b1	Active_High	Manual control is supported
0x8220	AnalogTrimming_AutoInq	2 - 2	0b0	Active_High	Auto adjustment by the device isn't possible
0x8220	AnalogTrimming_AutoOnceInq	3 - 3	0b0	Active_High	Auto adjustment by the device only once isn't possible
0x8220	AnalogTrimming_DefaultInq	4 - 4	0b0	Active_High	Loading the default value in the register again isn't possible
0x8220	AnalogTrimming_ValueType	23 - 16	0b10110001	Active_High	Array type is variable type + 0x80 so in this case: 0x31 + 0x80 = B1
0x8220	AnalogTrimming_Readable	24 - 24	0b1	Active_High	BasicCSR is readable
0x8220	AnalogTrimming_Writable	25 - 25	0b1	Active_High	BasicCSR is writable
0x8220	AnalogTrimming_UserSetLoadable	26 - 26	0b0	Active_High	-
0x8220	AnalogTrimming_Active	30 - 30	0b1	Active_High	BasicCSR is active
0x8220	AnalogTrimming_Implemented	31 - 31	0b1	Active_High	BasicCSR is implemented
0x8224	AnalogTrimming_OffsetForExpanded	31 - 0	0b00000000000000000000000000000000	Active_High	-

Copyright © Magics Technologies NV

MAG-IMG002X1-NC – Full HD CMOS rad-hard image sensor

0x8228	AnalogTrimming_Control	3 - 0	0b0001	Active_High	Manual control is selected
0x822c	AnalogTrimming_NumberOfElements	30 - 0	0b00000000000000000000000000010010	Active_High	Equal to the number of 32-bit values that need to be set in this control
0x822c	AnalogTrimming_MoreDimension	31 - 31	0b0	Active_High	To indicate it is only a 1D array
0x8300	ManualSettings_SizeOfCategoryBlock	23 - 0	0b000000000000000000001001000	Active_High	Indicates the total size of the Category including the header
0x8300	ManualSettings_CategoryBlockNumber	31 - 24	0b00011001	Active_High	Indicates the CategoryNumber
0x8320	ManualSettings_NoSpecifyInq	0 - 0	0b0	Active_High	Device can't set the value to device specific values
0x8320	ManualSettings_ManualInq	1 - 1	0b1	Active_High	Manual control is supported
0x8320	ManualSettings_AutoInq	2 - 2	0b0	Active_High	Auto adjustment by the device is possible (by the convertion blocks)
0x8320	ManualSettings_AutoOnceInq	3 - 3	0b0	Active_High	Auto adjustment by the device only once isn't possible
0x8320	ManualSettings_DefaultInq	4 - 4	0b0	Active_High	Loading the default value in the register again isn't possible
0x8320	ManualSettings_ValueType	23 - 16	0b10110001	Active_High	Array type is variable type + 0x80 so in this case: 0x31 + 0x80 = B1
0x8320	ManualSettings_Readable	24 - 24	0b1	Active_High	BasicCSR is readable
0x8320	ManualSettings_Writable	25 - 25	0b1	Active_High	BasicCSR is writable
0x8320	ManualSettings_UserSetLoadable	26 - 26	0b0	Active_High	-
0x8320	ManualSettings_Active	30 - 30	0b1	Active_High	BasicCSR is active
0x8320	ManualSettings_Implemented	31 - 31	0b1	Active_High	BasicCSR is implemented
0x8324	ManualSettings_OffsetForExpanded	31 - 0	0b00000000000000000000000000000000	Active_High	-
0x8328	ManualSettings_Control	3 - 0	0b0001	Active_High	Automatic control is selected, if this is selected the values below will be update automaticly
0x832c	ManualSettings_NumberOfElements	30 - 0	0b00000000000000000000000000000110	Active_High	Equal to the number of 32-bit values that need to be set in this control
0x832c	ManualSettings_MoreDimension	31 - 31	0b0	Active_High	To indicate it is only a 1D array
0x8400	WordGenerator_SizeOfCategoryBlock	23 - 0	0b000000000000000010010000	Active_High	Indicates the total size of the Category including the header
0x8400	WordGenerator_CategoryBlockNumber	31 - 24	0b00011010	Active_High	Indicates the CategoryNumber
0x8420	WordGenerator_NoSpecifyInq	0 - 0	0b0	Active_High	Device can't set the value to device specific values
0x8420	WordGenerator_ManualInq	1 - 1	0b1	Active_High	Manual control is supported
0x8420	WordGenerator_AutoInq	2 - 2	0b0	Active_High	Auto adjustment by the device only once isn't possible
0x8420	WordGenerator_AutoOnceInq	3 - 3	0b0	Active_High	Auto adjustment by the device only once isn't possible
0x8420	WordGenerator_DefaultInq	4 - 4	0b0	Active_High	Loading the default value in the register again isn't possible
0x8420	WordGenerator_ValueType	23 - 16	0b10110001	Active_High	Array type is variable type + 0x80 so in this case: 0x31 + 0x80 = B1
0x8420	WordGenerator_Readable	24 - 24	0b1	Active_High	BasicCSR is readable
0x8420	WordGenerator_Writable	25 - 25	0b1	Active_High	BasicCSR is writable
0x8420	WordGenerator_UserSetLoadable	26 - 26	0b0	Active_High	-
0x8420	WordGenerator_Active	30 - 30	0b1	Active_High	BasicCSR is active
0x8420	WordGenerator_Implemented	31 - 31	0b1	Active_High	BasicCSR is implemented
0x8424	WordGenerator_OffsetForExpanded	31 - 0	0b00000000000000000000000000000000	Active_High	-
0x8428	WordGenerator_Control	3 - 0	0b0001	Active_High	Always manual mode
0x842c	WordGenerator_NumberOfElements	30 - 0	0b00000000000000000000000000011000	Active_High	Equal to the number of 32-bit values that need to be set in this control
0x842c	WordGenerator_MoreDimension	31 - 31	0b0	Active_High	To indicate it is only a 1D array

Pre

Copyright © Magics Technologies NV

13. Product maturity levels

Magics uses the following product maturity levels.

Maturity	Description
PROTO	Functionality tested in typical voltage and temperature; no commitment on specification performance. Package may differ depending on availabilities. No radiation hardness guarantee.
EM	Characterization performed in typical voltage and temperature conditions. No commitment on specification performance. No radiation hardness guarantee.
EQM	Characterization performed over full voltage and temperature range. No radiation hardness guarantee.
PROD	Qualified samples, no screening. Radiation hardness guarantee.
FM	Qualified samples, screening performed. Radiation hardness guarantee.

14. Product versions and ordering information

Product code	Maturity level availability	
MAG-IMG00241-NC	**EM, EQM**	Full HD monochrome image sensor packaged in a CLCC-104 custom package.
MAG-IMG00251-NC	**EM, EQM**	Full HD color image sensor packaged in a CLCC-104 custom package.

14.1 Errata

Below a table can be found with some additional notes/errata.

Product code	Serial number	Errata
MAG-IMG00241-NC and MAG-IMG00251-NC	**ALL**	- The mirroring feature described in section 8.3.6 can be used for the Y direction, but needs to be fixed for the X direction to read from right to left. The latter is required for the correct operation of the sensor. As a result, the sensor is image should be mirrored in software/post-processing.

Preliminary/Confidential

15. Revision information

Version number	Date	Change description
2025/03-rev1.0	2025-03-31	- first release of the datasheet of MAG-IMG002X1-NC, which is the MAG-IMG001X1-NC imager die in a different package (CLCC-104). MAG-IMG001X1-NC will become obsolete. - Implemented changes w.r.t. 2024/06-rev2.0 version of datasheet of MAG-IMG001X1-NC: • Updated product name throughout the document. • Updated sections on packaging information and pinout. • Updated the maximum FPS in FULL HD mode to 30 FPS. Higher FPS are achievable in other modes. • Updated reported numbers on power consumption for the supported modes. • 85 degC of junction temperature is guaranteed at pre-irrad conditions, when the dark current is low. • Added section 9.4 Recommended operating conditions in radiation environment. • Updated section 9.3 thermal management.
2025/04-rev1.1	2025-04-25	- added additional information on the black rows: advise to not use the 10 outer pixel rows. - explicitly added that SE robustness is by design, but not yet validated/tested - updated current consumption table. - type: CLCC-102 → CLCC-104
2025/12-rev1.2	2025-12-18	- capacitors in Figure 13 and Figure 14 are changed from 4.7uF to 47uF. - pin VDDPLL is removed from Figure 13 and Figure 14. - added more information on the PIN-1 indication in Figure 4. - VDDIO minimum voltage is increased to 3.135V, similar as VDDA. - added explicitly 'No radiation hardness guarantee' for the models PROTO, EM and EQM in section 13. - updated section 9.5: removed info on 12-bit FHD25 mode, and added information on the default start-up mode. - added an important note in section 7.3. Also added a MAX number for parameter I_VDDD, with an additional footnote. - updated disclaimer.

Preliminary/Confidential

Disclaimer

Magics Technologies' products are sold by description only. Magics Technologies reserves the right to make changes in circuit design, software and/or specifications at any time without notice for products in PROTO or EM maturity status. Accordingly, the reader is cautioned to verify that datasheets are current before placing orders. Information furnished by Magics Technologies is believed to be accurate and reliable. However, no responsibility is assumed by Magics Technologies for its use; nor for any infringements of patents or other rights of third parties which may result from its use. No license is granted by implication or otherwise under any patent or patent rights of Magics Technologies.

For information regarding Magics Technologies and its products, see www.magics.tech