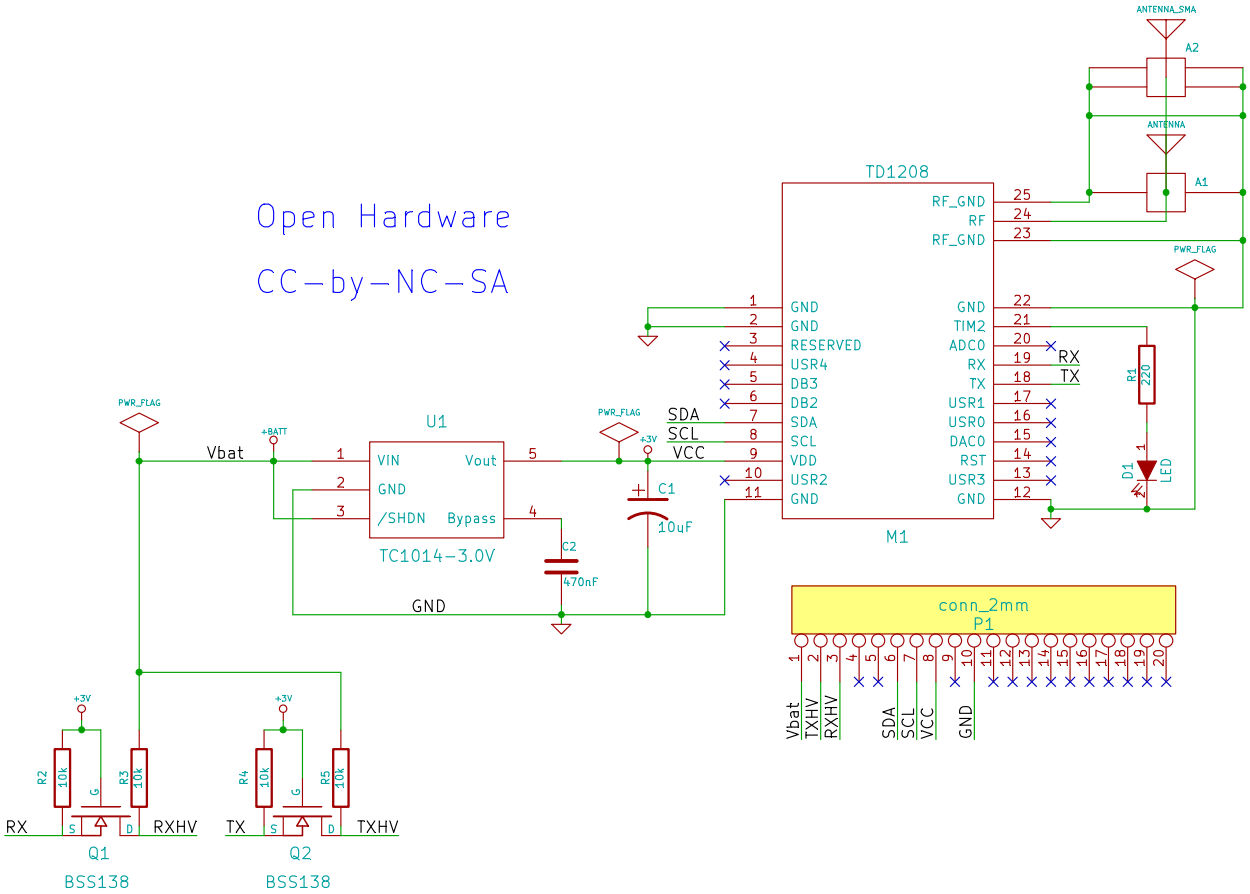

File: Sigbee-V02-2.sch Sheet: /	Author : jpb-labs	
Title:		
Size: A4	Date: 5 mar 2015	**Rev:**
KiCad E.D.A. eeschema (2013-07-07 BZR 4022)-stable		Id: 1/1