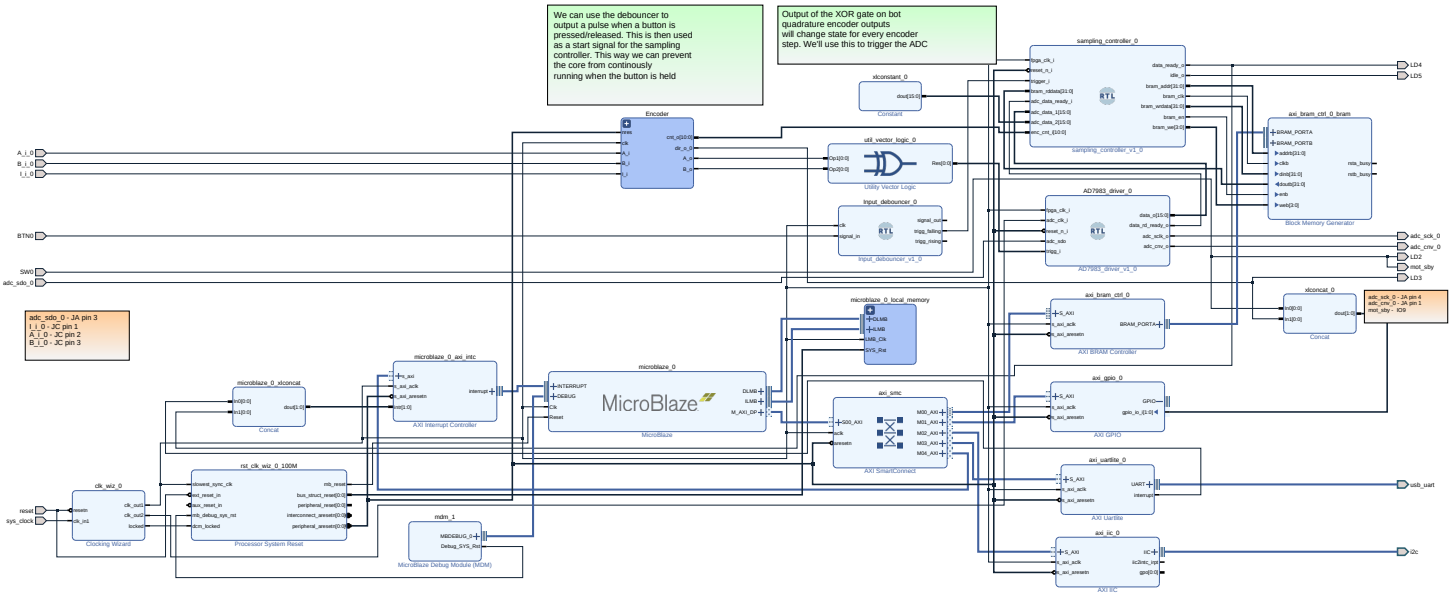
We can use the debouncer to output a pulse when a button is pressed/released. This is then used as a start signal for the sampling controller. This way we can prevent the core from continously running when the button is held
Output of the XOR gate on bot quadrature encoder outputs will change state for every encoder step. We'll use this to trigger the ADC
sampling_controller_0
sampling_controller_v1_0
xlconstant_0
Constant
Encoder
util_vector_logic_0
Utility Vector Logic
Input_debouncer_0
Input_debouncer_v1_0
AD7983_driver_0
AD7983_driver_v1_0
axi_bram_ctrl_0_bram
Block Memory Generator
axi_bram_ctrl_0
AXI BRAM Controller
xlconcat_0
Concat
microblaze_0_local_memory
microblaze_0_axi_intc
AXI Interrupt Controller
microblaze_0
MicroBlaze
axi_smc
AXI SmartConnect
axi_gpio_0
AXI GPIO
axi_uartlite_0
AXI Uartlite
axi_iic_0
AXI IIC
microblaze_0_xlconcat
Concat
clk_wiz_0
Clocking Wizard
rst_clk_wiz_0_100M
Processor System Reset
mdm_1
MicroBlaze Debug Module (MDM)
A_i_0
B_i_0
I_i_0
BTN0
SW0
adc_sdo_0
LD4
LD5
adc_sck_0
adc_cnv_0
LD2
mux_sby
LD3
usb_uart
i2c
reset
sys_clock
adc_sdo_0 - JA pin 3
I_i_0 - JC pin 1
A_i_0 - JC pin 2
B_i_0 - JC pin 3
adc_sck_0 - JA pin 4
adc_cnv_0 - JA pin 1
mux_sby - K18