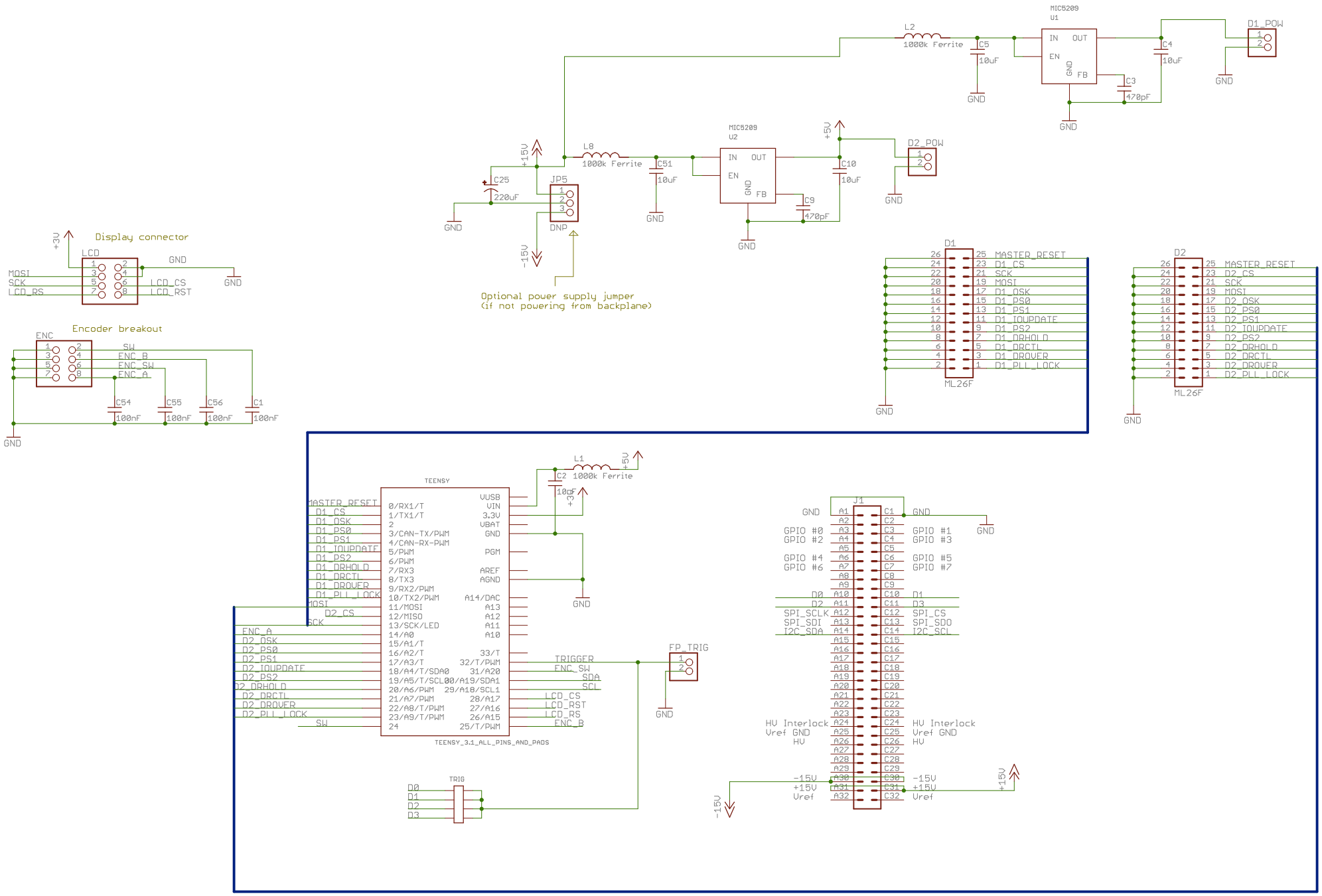
MIC5209
U1
IN
OUT
EN
GND
FB
L2
1000k Ferrite
C5
10uF
C4
10uF
C3
470pF
D1_POW
GND
MIC5209
U2
L8
1000k Ferrite
C51
10uF
C10
10uF
C9
470pF
D2_POW
+15V
-15V
+5V
C25
220uF
JP5
DNP
Optional power supply jumper
(if not powering from backplane)
Display connector
LCD
+3V
MOSI
SCK
LCD_RS
LCD_CS
LCD_RST
Encoder breakout
ENC
SW
ENC_B
ENC_SW
ENC_A
C54
100nF
C55
100nF
C56
100nF
C1
100nF
D1
MASTER_RESET
D1_CS
SCK
MOSI
D1_OSK
D1_PS0
D1_PS1
D1_IOUPDATE
D1_PS2
D1_DRHOLD
D1_DRCTL
D1_DROVER
D1_PLL_LOCK
ML26F
D2
D2_CS
D2_OSK
D2_PS0
D2_PS1
D2_IOUPDATE
D2_PS2
D2_DRHOLD
D2_DRCTL
D2_DROVER
D2_PLL_LOCK
TEENSY
L1
1000k Ferrite
C2
10uF
0/RX1/T
1/TX1/T
2
3/CAN-TX/PWM
4/CAN-RX-PWM
5/PWM
6/PWM
7/RX3
8/TX3
9/RX2/PWM
10/TX2/PWM
11/MOSI
12/MISO
13/SCK/LED
14/A0
15/A1/T
16/A2/T
17/A3/T
18/A4/T/SDA0
19/A5/T/SCL0
20/A6/PWM
21/A7/PWM
22/A8/T/PWM
23/A9/T/PWM
24
VUSB
VIN
3.3V
VBAT
GND
PGM
AREF
AGND
A14/DAC
A13
A12
A11
A10
33/T
32/T/PWM
31/A20
29/A18/SCL1
28/A17
27/A16
26/A15
25/T/PWM
TEENSY_3.1_ALL_PINS_AND_PADS
TRIGGER
FP_TRIG
TRIG
D0
D1
D2
D3
J1
GPIO #0
GPIO #1
GPIO #2
GPIO #3
GPIO #4
GPIO #5
GPIO #6
GPIO #7
SPI_SCLK
SPI_SDI
SPI_CS
SPI_SDO
I2C_SDA
I2C_SCL
HV Interlock
Vref GND
HV
Vref