# Jordan River Pink Salmon Transplant Feasibility Study

## 04.Jo.01

*Prepared with financial support of:*

**BC Hydro Bridge Coastal Fish and Wildlife Restoration Program**

*Prepared by:*

E. Guimond
**473 Leighton Ave.**
**Courtenay, BC  V9N 2Z5**
**guimonde@telus.net**

***on behalf of:***

Fisheries and Oceans Canada

**July 2005**

## EXECUTIVE SUMMARY

The Jordan River watershed has an extensive history of industrial activity including forestry, mining and hydroelectric development. Over the past three decades these activities have lead to the decimation of pink, chum and coho salmon, steelhead and sea-run cutthroat trout populations in the Jordan River. Recent testing of pink and coho salmon incubation in Jordan River, however, are providing some indications that acid mine run-off may not be imposing the serious impact that it once was thought to have on salmon populations in the river. This, along with community interest has resulted in an effort to re-establish pink salmon runs using enhancement methods.

The objective of this study was to explore the feasibility of establishing an incubation facility for pink salmon in the lower reach of the Jordan River and provide a conceptual workplan for such a facility. Two options were identified based primarily on the requirement of an adequate water supply to incubate 0.5 million eggs to the swim-up (fry) stage:

**Option 1:** establish a pink salmon incubation facility at the BC Hydro Jordan River Operations compound with water supply from the penstock.
**Option 2:** establish a pink salmon incubation facility on WFP property with water supply from an unnamed tributary of the Jordan River.

Estimated costs for equipment and set-up of a facility range from $41,000 to $60,000, excluding transport of eggs. Further research is necessary before a final decision can be made and both of these options would require final approval of a workplan and development of a formal agreement to establish a short-term incubation facility.

## TABLE OF CONTENTS

EXECUTIVE SUMMARY ..... II
TABLE OF CONTENTS ..... III
LIST OF FIGURES ..... III
LIST OF TABLES ..... IV
LIST OF PHOTOS ..... IV
LIST OF APPENDICES ..... VI
**1.0 INTRODUCTION ..... 1**
**2.0 BACKGROUND ..... 1**
**3.0 GOALS AND OBJECTIVES ..... 2**
**4.0 STUDY AREA ..... 2**
**5.0 METHODS ..... 3**
**6.0 RESULTS ..... 3**
**7.0 DISCUSSION ..... 3**
7.1 OPTION 1 – BC HYDRO JORDAN RIVER OPERATIONS COMPOUND ..... 3
7.2 OPTION 2 – TRIBUTARY OF THE JORDAN RIVER ..... 4
7.3 POTENTIAL PRODUCTION ..... 7
7.4 BROODSTOCK SOURCES ..... 7
7.5 DELIVERY OF EGGS TO SITE ..... 8
7.6 COMMUNITY INVOLVEMENT ..... 10
7.7 INCUBATION DESIGN ..... 10
7.8 ESTIMATED FABRICATION COSTS ..... 12
7.9 MONITORING/EVALUATION ..... 14
**8.0 RECOMMENDATIONS ..... 16**
**9.0 ACKNOWLEDGEMENTS ..... 17**
**10.0 REFERENCES ..... 17**

## LIST OF FIGURES

**Figure 1**. Wetsern Forest Products Limited stream classification map showing location of tributary on west side of the Jordan River, across from the BC Hydro powerplant. Approximate location of the tributary beyond the cutblock boundary (yellow) has been added. ..... 6

**Figure 2**. Daily average water temperature in the Jordan River October 2002 to February 2003 (from Wright and Guimond, 2003). ..... 9

**Figure 3.** Daily average temperature regime at the Howard English (Goldstream) Hatchery from data collected from 1991 – 2004 (from Norum and Johannes, 2004). ....10

**Figure 4.** Schematic showing plan and profile view of pink incubation facility beside BC Hydro's Jordan River Operations office building. ....12

**Figure 5.** Schematic diagram of a typical "Newbury" spawning riffle structure ....16

## LIST OF TABLES

**Table 1.** Cost estimate for plumbing materials/installation at the Jordan R. powerhouse (provided by D.A. Gorovenko, P.Eng. BC Hydro Engineering)....4

**Table 2.** Cost estimate to establish an incubation facility in the Jordan River tributary. ....5

**Table 3.** Estimated monthly average water temperatures from the penstock, measured at the Jordan River powerhouse....9

**Table 4.** Estimated fabrication costs for the main components of a pink salmon incubation facility.. ....13

**Table 5.** Relative water levels measured approximately 400 m downstream of the tailrace during flow reductions associated with normal plant shut-down operations at Jordan River. ....16

## LIST OF PHOTOS

**Photo 1.** Proposed location for a pink salmon incubation facility at the BC Hydro Jordan River Operations compound. ....19

**Photo 2.** Example of Atkin eyeing boxes to accommodate pink salmon eggs from fertilization to the eyed stage. ....19

**Photo 3.** Example of a circular incubator to accommodate pink salmon eggs from the eyed stage to swim-up stage. ....20

**Photo 4.** Typical habitat in the Jordan River upstream of the tailrace. Spawning gravel presently consists of small pockets in relation to boulders....20

**Photo 5.** Mouth of the Jordan River at low tide and zero generation, looking downstream from HWY 14 (04/26/05 10:00). ....21

**Photo 6.** Jordan River at low tide and zero generation, looking upstream from HWY 14 (04/26/05 10:00). ....21

**Photo 7.** Lower Jordan River during low tide and low flow, looking downstream from the tailrace (800 m from mouth) at zero generation. The area in the foreground was identified as having potential to strand fry/adults during generator shutdown (04/26/05 11:00).....22

**Photo 8**. Lower Jordan River during low tide and low flow, looking upstream, 350 m from the mouth, at zero generation. The area in the foreground was identified as having potential to strand fry/adults during generator shutdown (04/26/05 11:10). .....22

**Photo 9.** Lower Jordan River during low tide and low flow, looking downstream at the tailrace at zero generation (04/26/05 11:30).....23

**Photo 10.** Lower Jordan River during low tide and low flow, looking downstream at the tailrace at 75% generation, or 130 MW (04/26/05 11:50).....23

**Photo 11.** Lower Jordan River during low tide and low flow, looking upstream, 350 m from the mouth (Photo 8), at 75% generation (130 MW). The river is flowing at approximately 50 cms; staff gauge reading is 0.5 m (04/26/05 12:02).....24

**Photo 12.** Lower Jordan River, 350 m from the mouth, looking from right to left bank, during normal plant shutdown operations. Staff gauge reading is 0.41 m (04/26/05 12:10). .....24

**Photo 13.** Lower Jordan River, 350 m from the mouth, looking upstream, during normal plant shutdown operations. Staff gauge reading is 0.29 m (04/26/05 12:14).....25

**Photo 14**. Lower Jordan River, 350 m from the mouth, looking from right to left bank, during normal plant shutdown operations. Staff gauge reading is 0.29 m (04/26/05 12:14). .....25

**Photo 15.** Lower Jordan River, 350 m from the mouth, looking upstream, during normal plant shutdown operations. Staff gauge reading is 0.19 m (04/26/05 12:18).....26

**Photo 16.** Lower Jordan River, 350 m from the mouth, looking from right to left bank, during normal plant shutdown operations. Staff gauge reading is 0.19 m (04/26/05 12:18). .....26

**Photo 17.** Lower Jordan River, 350 m from the mouth, looking upstream, during normal plant shutdown operations. Staff gauge reading is 0.09 m (04/26/05 12:26).....27

**Photo 18.** Lower Jordan River, 350 m from the mouth, looking from right to left bank, during normal plant shutdown operations. Staff gauge reading is 0.09 m (04/26/05 12:26). .....27

**Photo 19**. Lower Jordan River, 350 m from the mouth, looking upstream, during normal plant shutdown operations. Staff gauge reading is 0.04 m (04/26/05 12:34). ..... 28

**Photo 20.** Lower Jordan River, 350 m from the mouth, looking from right to left bank, during normal plant shutdown operations. Staff gauge reading is 0.04 m (04/26/05 12:34). ..... 28

## LIST OF APPENDICES

**Appendix A** Circular incubator design for pink salmon, Fisheries and Oceans Canada dwg 4-6-356.

**Appendix B** BCRP Financial Statement

# 1.0 INTRODUCTION

The lower accessible reach of the Jordan River has historically supported a variety of fish including pink, chum and coho salmon, steelhead and sea-run cutthroat trout. However, over the past three decades anadromous fish populations have declined due to industrial activities (forestry, mining, hydroelectric development) in the watershed. Presently, there are no self-sustaining anadromous populations in the lower river (RRL Recreation Resources Ltd., 2001).

During the Jordan River Water Use Planning (WUP) Process (2000-2001), a bioassay was conducted to test the suitability of habitat in the lower Jordan River for coho salmon egg incubation. Results from this study indicated that the habitat in the lower river (between the tailrace and the boulder obstruction 400 m upstream) was capable of supporting the incubation of coho salmon eggs (DFO 2001 unpublished report). The study was repeated in 2002 with pink salmon eggs since it was recognized that pink salmon would likely suffer little from the copper contamination and rearing habitat constraints because they leave fresh water immediately after emerging from the gravel. Results from the incubation study, bioassay and sea water challenge were also encouraging (Wright and Guimond 2003).

The Comptroller of Water Rights has recently signed off the Jordan WUP Consultative Committee (CC) Report, which recommended a minimum flow release of 0.25 cms (8.7 cfs) for the Jordan River. Though the decision for this release was specifically to address resident fish populations in the lower river, ancillary benefits for anadromous fish were acknowledged by the CC. This additional flow will improve conditions for incubating eggs and may provide a dilution of the current sources of copper. Local residents have expressed interest in re-establishing a pink salmon run in order to enjoy fish in the Jordan River and, to initiate a sport fishery at the mouth of the river. Re-establishing a pink salmon run will provide social and economic benefits in the Jordan River and throughout southern Vancouver Island.

# 2.0 BACKGROUND

Hydroelectric development in the Jordan River watershed commenced in 1909 and operated continuously between 1912 and 1969 (BC Hydro, 2002). During this period, flows passing through the powerhouse discharged into a 500 m long man-made tailrace before emptying into the river estuary. This tailrace sustained the majority of the pink and chum spawning in the lower river until the hydro facility was redeveloped in 1971. Anecdotal evidence and the DFO Annual Stream Survey data estimate peak numbers of pink and chum salmon in the 1950's and 60's between 5000 and 10,000. Following redevelopment, flows down the mainstem were diverted at Elliott Dam through a penstock, leaving only minor tributary flow to wet the lower Jordan River through the

summer and early fall. The tailrace of the old generating station was decommissioned and dewatered. The new powerplant and tailrace now situated on the opposite (west) side of the river, empties directly into the lower Jordan River approximately 800 m upstream of the estuary. The location of the new tailrace scours old spawning beds and creates extreme fluctuations of flow in the section of river downstream. In addition, three dams (Elliot, Diversion and Bear) have blocked the recruitment of gravel from the upper watershed, reducing the available spawning area to a few small pockets. Elders from T'Sou-ke Nation recall large areas of good quality gravel in this reach historically (RRL Recreation Resources Ltd., 2001).

Mining activities in the Jordan River occurred between the early 1900's and the 1980's. Abandoned mine shafts and seepages continue to deliver copper contaminated water at various points along the east bank and through a large mine tailings, which periodically slumps and erodes into the river. Mine tailings were also deposited to the inshore shelf in the Jordan River estuary between 1960 and 1974. Failures in the pipeline during this period resulted in tailings being deposited closer to shore.

Logging activity in the watershed dates back to the 1880's. Western Forest Products Limited (WFP) have managed logging operations and conducted booming and towing operations in the lower Jordan River since 1934. The present Site of the log sort activities at the river mouth was once a salt marsh that was infilled with materials from a mining slump.

Decommissioning of the old powerhouse and tailrace, an altered flow regime below Elliot Dam, copper contamination, and logging related impacts have eliminated anadromous fish production in the lower Jordan River.

## 3.0 GOALS AND OBJECTIVES

The goal of the Jordan River Pink Salmon Transplant Feasibility Study is to determine a strategy for re-establishing a pink salmon run in the Jordan River. Key objectives of the study are to assess available options for a suitable water supply and location for an incubation facility for 0.5 million pink salmon eggs in the lower river.

## 4.0 STUDY AREA

The Jordan River is located along the southwest coast of Vancouver Island approximately 50 km west of Victoria. It flows southwesterly between the Sooke Hills and the Seymour Mountain Range and drains into the Juan de Fuca Strait. The total drainage area is approximately 165 $km^2$. A series of boulder obstructions located 1.2 km above the mouth restricts anadromous fish production to this lower reach.

# 5.0 METHODS

The information presented in this report was assembled from a variety of sources including published and unpublished documents, discussions with various agency and industry staff, and data collected during two on-site visits to the Jordan River – December 1, 2004 and April 26, 2005. In addition, the author was able to provide some general comment through knowledge gained during a previous project on the river (Wright and Guimond, 2003).

# 6.0 RESULTS

One of the key elements for the re-establishment of a pink salmon run in the Jordan River is an adequate water supply to incubate 0.5 million eggs to the swim-up (fry) stage. During a site reconnaissance of the Jordan River and BC Hydro Operations, two options for establishing a pink salmon incubation facility were identified:

**Option 1:** establish a pink salmon incubation facility at the BC Hydro Jordan River Operations compound with water supply from the penstock.

**Option 2:** establish a pink salmon incubation facility on WFP property with water supply from an unnamed tributary of the Jordan River.

# 7.0 DISCUSSION

## 7.1 Option 1 – BC Hydro Jordan River Operations Compound

A meeting with BC Hydro and staff at the Jordan River powerhouse was held in early December to discuss the feasibility of constructing a pink salmon incubation facility on BC Hydro property within the Jordan River Operations compound. The objective of this meeting was to determine whether utilizing penstock water was a practical option, and whether support for such a project could be acquired.

Locating an incubation facility within the compound would provide a greater level of security, as the compound is surrounded by a chain link fence and is staffed during the day (except weekends). That being said, once established, a pink salmon incubation facility is relatively low maintenance, requiring few site visits from DFO fisheries technicians.

The proposal was met with great interest, both from the BC Hydro Natural Resource Specialist and staff at the Jordan River facility, although it is recognized that any project proposed for this site would require approval from the Plant Manager. The project

would provide an opportunity for local staff involvement in and support for environmental programs. It would also build interagency relationships.

Some concerns raised by BC Hydro revolved around issues of liability, future operations and expectations. An agreement between BC Hydro and DFO would be required addressing these concerns.

***Water Supply***

A pink salmon incubation facility could be located adjacent the office building at the Jordan River powerhouse compound (Photo 1). It would utilize water from the penstock through an abandoned system that was in place for domestic supply to the local village. Table 1 provides a preliminary list of plumbing materials and estimated cost for connecting to the water supply at the powerhouse.

**Table 1. Cost estimate for plumbing materials/installation at the Jordan R. powerhouse (provided by David A. Gorovenko, P.Eng. BC Hydro Engineering).**

| **Description** | **Estimated Cost** |
|---|---|
| One 2" fisher-type regulating valve with pressure controller. The size (and therefore cost) is quite dependent on required flows. | ~ $22,000 |
| Two 2" ball valves, class 300, carbon steel body & stainless ball | $1,800 |
| Install tee at raw water header, provide and install piping to Fisher valve and isolating valves, mount Fisher valve on wall, provide and install short downstream steel section prior to plastic piping. Provide and install compressed air supply to Fisher valve (assumes existing DW takeoff can be used). | ~ $15,000 |
| Suggest using buried 2" HDPE piping (SDR 11 wall thickness) from powerhouse to point of delivery. (25 m) | $ 100 |
| Coring through the Powerhouse wall, sealing pipe penetration, trenching and laying pipe. | ~$500 |
| **Total** | **$ 39,400** |

## 7.2 Option 2 – Tributary of the Jordan River

A site reconnaissance on a small tributary to the Jordan River was conducted to determine its potential for supporting a pink salmon incubation facility. The area was assessed for access, security, water flow, and proximity to the Jordan River for seaward migration of pink fry.

### *Location*

The tributary is located on the east side of the Jordan River and flows south westerly, entering the mainstem directly across from the BC Hydro Powerhouse. It is classed as an S5 stream on Western Forest Products Limited (WFP) maps, and flows through a recently harvested cutblock in the upper reaches. Access to the site is through WFP land on an existing logging road (Figure 1). Unlike other tributaries on this side of the mainstem further to the north, this tributary does not flow through the old mine tailings, thus is not contaminated with high copper concentrations.

A site reconnaissance of the tributary was conducted in early December. Two steep falls are located in the lower surveyed section of stream. The first is about 20 m high, just downstream from the logging road; the second, about 50 m high, just before its confluence with the Jordan River. The area identified to be favorable for an incubation facility is between these two waterfalls where road access is available. Permission was granted to allow the establishment of a small pink salmon incubation facility on this tributary if necessary, and to access the site as required throughout the duration of the program. Flow in the tributary was measured at 0.02 $m^3/s$ (0.71 cfs) using a Swoffer Current Meter during the reconnaissance visit while dissolved oxygen was 12.1 mg/l and temperature was 7.4 $^oC$ (Oxyguard Oxygen Meter). A more detailed annual temperature regime for this tributary has not yet been collected.

Water flow in the tributary was observed during the winter 2004/05 by BC Hydro staff at the Jordan River powerhouse. The tributary can be easily seen from the compound where it drops over the second waterfalls before entering the Jordan River. During a period of low winter flows in the watershed (mid-February 2005), the tributary was observed to flow continuously at this location. Further assessment of the tributary would be required if this site is selected to accommodate a pink incubation facility. Below is an estimate of plumbing/pipe and installation costs for this site (Table 2).

**Table 2. Cost estimate to establish an incubation facility in the Jordan River tributary.**

| **Description** | **Estimated Cost** |
|---|---|
| Intake | $ 3000 |
| Pipeline | $ 1500 |
| Plumbing | $ 1500 |
| Excavation | $ 3500 |
| Supervision | $ 2500 |
| Labour | $ 2000 |
| Security fence 30 x 20 feet | $ 6500 |
| **Total** | **$20,500.00** |

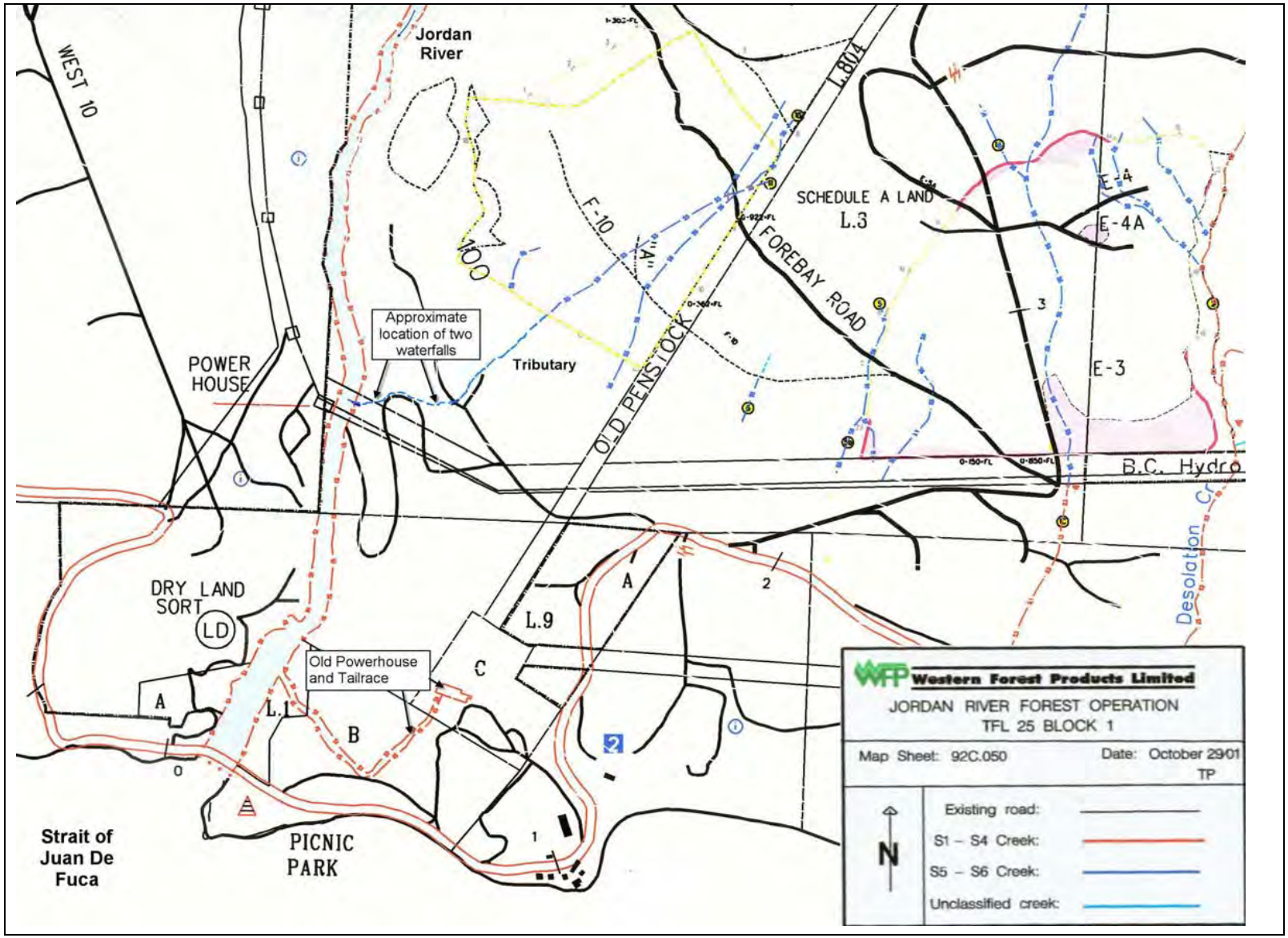


**Figure 1. Wetsern Forest Products Limited stream classification map showing location of tributary on west side of the Jordan River, across from the BC Hydro powerplant. Approximate location of the tributary beyond the cutblock boundary (yellow) has been added.**

## 7.3 Potential Production

Spawning habitat for pink salmon in the lower Jordan River is limited to the reach upstream of the tailrace to the boulder obstruction, or approximately 400 m length. This reach is dominated by cobble and boulders with isolated patches of spawning substrate dispersed amongst large boulders (Photo 4). The amount of suitable spawning habitat currently remaining in this reach has not yet been quantified.

For a return of 5000 adults (2500 pairs), using a biostandard of 1.2 $m^2$ of spawning habitat per pair, the requirement would be 3000 $m^2$ of spawning habitat, or approximately 8 $m^2$ per metre of river length in this reach. Fry production from this return is calculated to be 1 million (2500 x 2000 eggs per female), with instream survival to the fry stage estimated at 20%.

## 7.4 Broodstock Sources

Approval from the Fish Introductions and Transfers Committee for transplanting approximately 0.5 million pink salmon eggs to the Jordan River must be obtained prior to the construction of an incubation facility in the watershed. Possible broodstock sources of pink salmon are:

### *1. Quinsam River*

This stock is presently the main pink salmon transplant stock for Vancouver Island. Although the population is strong, there may be a risk of adults straying back to Quinsam en route to Jordan. It may be desirable to use more than one donor stock (possibly 250K each of Quinsam and a lower Fraser stock).

### *2. Lower Fraser Stock*

A lower Fraser stock, being across a transplant boundary, would require a disease screen, a fairly straightforward procedure. The stock of choice for lower Fraser transplants is usually Weaver Creek. Weaver Creek pinks are an odd year stock and are often used for brood for transfers in the lower mainland area and may be suitable as a stock whose migration pattern is to turn east to spawning streams (probably desirable for Jordan River). Another alternative may be Indian River (population in good shape) or Squamish (Indian River transplants, uncertain population strength in Squamish). A variable proportion (possibly a majority) of Fraser Pink migrate by Juan de Fuca Strait. So, a Weaver Creek transplant should have a reasonable chance of homing to Jordan en route to the Fraser (G. Bonnell, *pers. comm.*). The Chehalis River Hatchery has agreed to incubate up to 0.5 million Weaver Ck. pink eggs to the eyed stage at a cost of between $2-3K. Even year pinks would need to come from elsewhere, likely Quinsam River (M. Sheng, *pers. comm.*).

### *3. Washington State*

This was suggested as a potential donor stock because of the likelihood of more genetic similarity to west Vancouver Island stocks, and the migration route of returning adults is adjacent the Jordan R. watershed.

> "The even-year pink salmon populations nearest to the Snohomish River, WA appear to spawn in Vancouver Island rivers at least 130-150 km away (and perhaps considerably further), possibly in the lower Fraser River (T. Beacham), along Stuart Channel in the western Strait of Georgia, or between Sooke Inlet and Port San Juan on southwestern Vancouver Island (Aro and Shepard 1967). These areas also support the odd-year populations that appear to be nearest to Washington pink salmon populations (Aro and Shepard 1967)."[1]

This option is not practical due to the difficulties in obtaining fish health clearance from Fisheries and Oceans Canada Science Branch. An international transplant requires sign off from the Deputy Minister in Ottawa, eggs must come from a certified facility and must be quarantined for a specified period. It was recommended that Canadian sources be exhausted before contemplating an international transplant (Brian Anderson, *pers. comm.*)

## 7.5 Delivery of eggs to site

How and when eggs are delivered to the site will be determined by a variety of factors such as the location of the donor site (distance from Jordan River) and its capacity to incubate pink eggs to the eyed stage when transport is less risky. If the donor site does not have the capacity to incubate 0.5 million pink eggs to the eyed stage, then the green eggs and milt can be transported to a transitional site where they can be incubated to the eyed stage and then delivered to the Jordan River facility. The driving distance from Quinsam hatchery to Jordan River is approx. 3.5 – 4 hrs. If eggs are to be fertilized on-site at Jordan River, then transport will require cooling of the gametes and oxygen supplementation. Green eggs from Chehalis R. Hatchery (Weaver Creek stock) would need to be flown to either the Jordan River site or the Goldstream Hatchery (transition site). However eyed eggs can be driven from Chehalis R. Hatchery to Jordan R. in about 5 hours.

The Goldstream Hatchery, operated by the Goldstream Volunteer Salmon Enhancement Association (GVSEA), has agreed to be a transitional location where pink eggs can be incubated to the eyed stage. They have capacity to incubate all 0.5 million eggs. This would reduce driving time by one hour for eggs being transported

[1] from *Status Review of Pink Salmon from Washington, Oregon, and California*, J.J. Hard, R.G. Kope, W.S. Grant, F.W. Waknitz, L.T. Parker, and R.S. Waples.

from Quinsam Hatchery in Campbell River. A mean daily temperature regime for the Goldstream Hatchery (Figure 2) is provided for comparison with penstock water supply at the Jordan River (Table 3), and river temperature collected between October 2002 and February 2003 (Figure 3).

**Table 3. Estimated monthly average water temperatures from the penstock, measured at the Jordan River powerhouse.**

| Month | Average Penstock Water Temperature ($^{o}$C) |
|---|---|
| Oct | 4.5 |
| Nov | 1.2 |
| Dec | 2.0 |
| Jan | 3.2 |
| Feb | 3.5 |
| Mar | 4.5 |
| Apr | 6.0 |

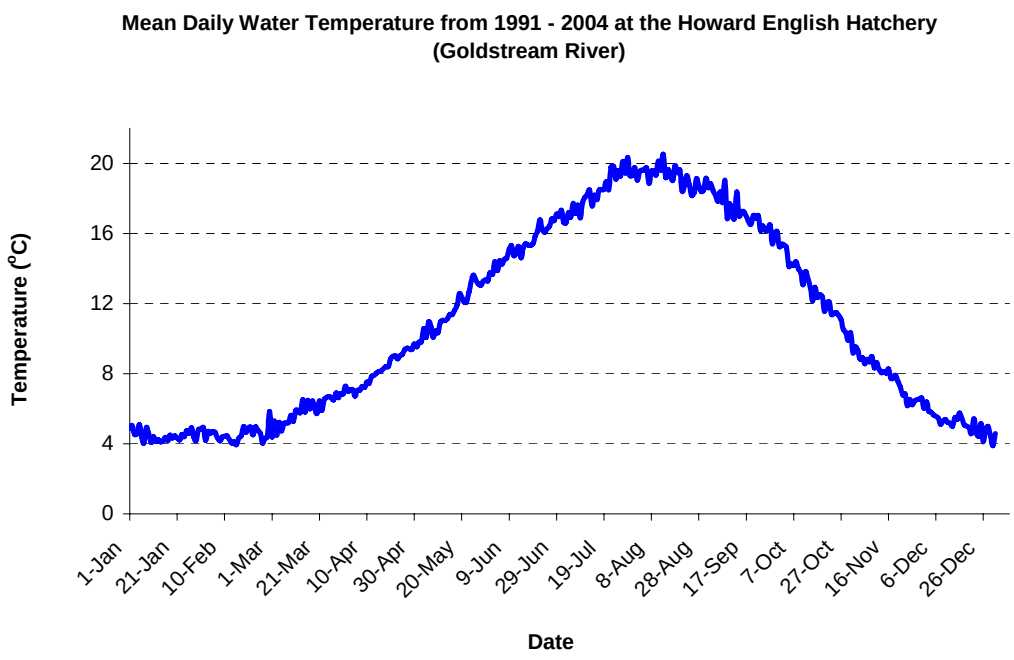


**Figure 2. Daily average temperature regime at the Howard English (Goldstream) Hatchery from data collected from 1991 – 2004 (from Norum and Johannes, 2004).**

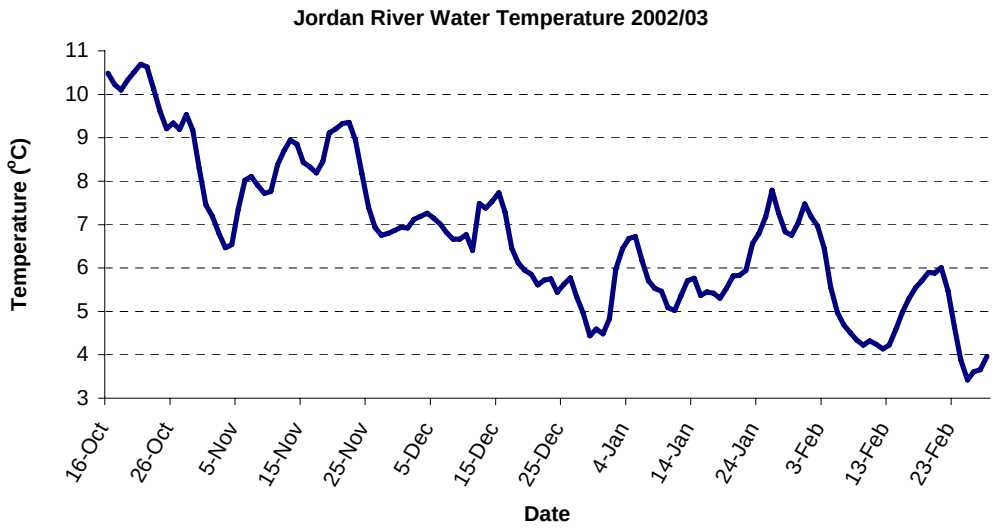


**Figure 3. Daily average water temperature in the Jordan River October 2002 to February 2003 (from Wright and Guimond, 2003).**

## 7.6 Community Involvement

The local community and the Goldstream Volunteer Salmon Enhancement Association are fully supportive of a pink salmon transplant into the Jordan River and re-establishment of a pink run. Members of the GVSEA have expressed an interest in assisting with this project. Their participation would be limited to providing technical assistance during egg acquisition at the donor facility and transporting eggs/milt to the receiving facility (either the Goldstream Hatchery or directly to a facility at the Jordan River). If the Goldstream Hatchery is used as a transitional site, they would care for the eggs until the eyed stage, and deliver to the incubation facility at Jordan River. If Option 2 is adopted, using the tributary as a water supply, involvement of the GVSEA would continue throughout the incubation period. However, if an incubation facility is constructed at the BC Hydro Jordan River Operations compound (Option 1), once the eggs are delivered to the site, day to day monitoring during the incubation period could be conducted by BC Hydro staff on-site and would consist of periodic checks to ensure adequate water supply and delivery to the incubators. Opportunities for further community participation would occur during the monitoring/evaluation stage of the program.

## 7.7 Incubation Design

Immediately following fertilization, pink salmon eggs are placed in Atkin eyeing boxes and reared until the eyed stage (Photo 2). These units provide an upwelling flow of water to the eggs, and can incubate large numbers of eggs in a small space. If eyed

eggs are transported to an incubation facility at Jordan River, rather than using green eggs, Atkin boxes will not be required. From the eyed stage to swim-up, pink eggs are reared in circular incubators (Appendix A; Photo 3). When the pink fry reach the swim-up stage, they will move into a collection trough that will lead to the Jordan River. No handling of the fry is required during their seaward migration. A schematic of a typical layout of the facility located at the Jordan River operations compound is provided in Figure 4. Atkin boxes are not included in this diagram.

The following incubation design is for a target fry release of 500,000 pink salmon. The number of eggs required to meet this target is approximately 555,000 eggs.

***Atkin eyeing boxes:***

- 4 cells per line
- flow 30 lpm per line
- loading per cell = 140K eggs per cell

***Incubators:***

- 3-Circular incubators upwelling area = 1 m2 (11 sq. ft.) upwelling screen area each
- Loading capacity 20K eggs per sq.ft.
- Total loading/incubator = 167K eggs/ incubator
- Flow per incubator = 90 lpm
- Total flow plus an overflow of 10 lpm = 280 lpm

***Aeration bulk box design:***

- 0.5 m x 0.5 m (18 in. x 18 in.) or 0.25 $m^2$ (324 sq. in.); (20 in dia pipe = 314 sq.in.) and 3.3 meters high (10 ft 10 in.)
- 25 mm (1 in.) – diam. pall media rings to be packed into box
- Distribution plate design 150 holes per 314 sq.in.; radius of each hole = 1/8 in. (0.25 cm)
- Box depth 3.5 m (11.5 ft)
- Distribution box depth 0.5 m (1.7 ft)
- Collection box depth = 0.5 m (1.7 ft)
- Collection box base to be 1.2 m (4 ft) above ground
- Height of incubators = 1 m (~36 in.)
- Pipeline connection =1.5 in dia pipe (cap. = 75-150 lpm)

***Flow rate versus water depth relationship for aeration box:***

| #holes | Water depth in distribution box (m) | Flow (lpm) | Flow (cfs) |
|---|---|---|---|
| 150 | 0.4 | 404 | 0.238 |
| 150 | 0.3 | 350 | 0.206 |
| 150 | 0.2 | 286 | 0.168 |
| 150 | 0.1 | 202 | 0.119 |
| 150 | 0.05 | 143 | 0.084 |

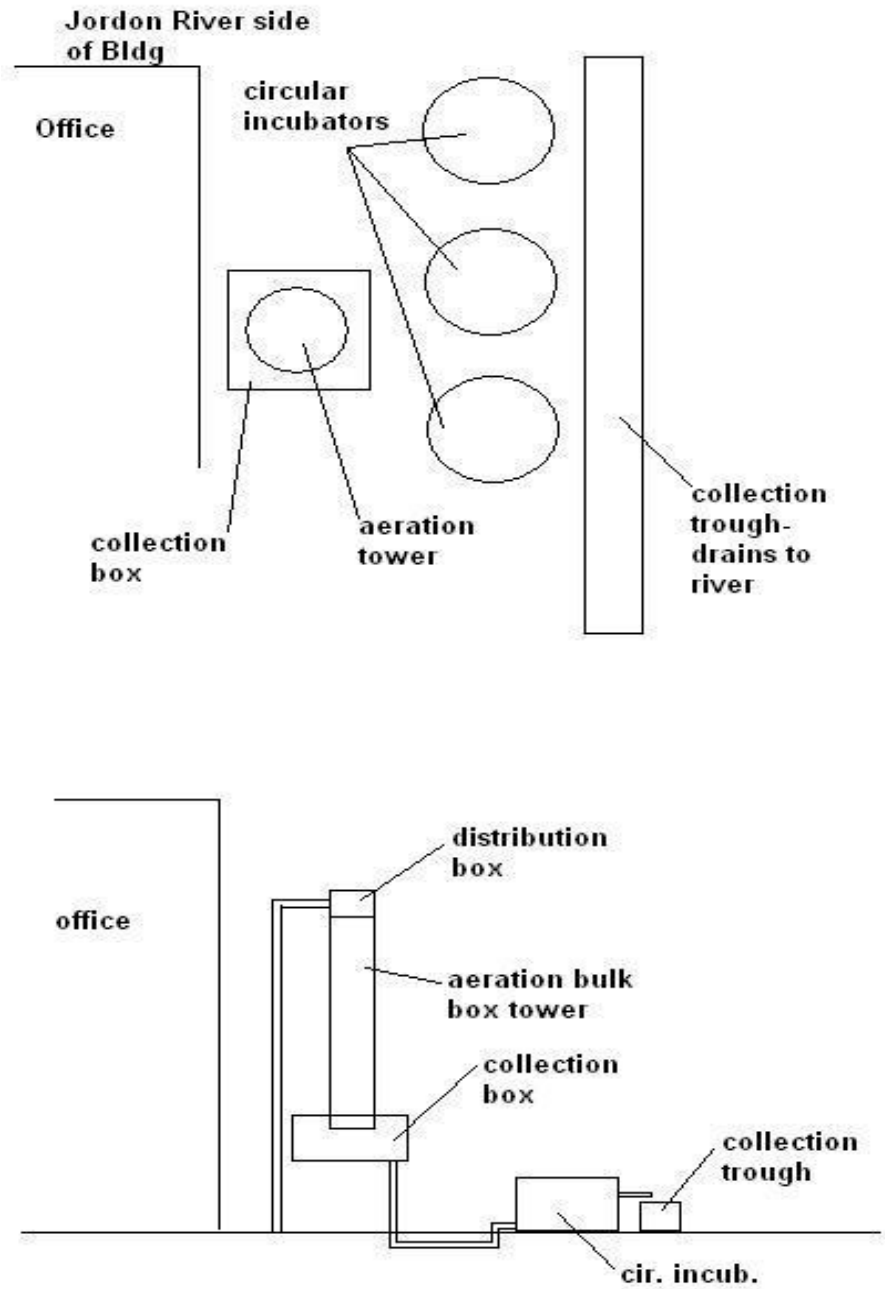


**Figure 4. Schematic showing plan and profile view of pink incubation facility beside BC Hydro's Jordan River Operations office building.**

## 7.8 Estimated Fabrication Costs

The following table provides a cost estimate for the major components of the incubation facility (Table 4). It should be noted that the components would be similar whether the facility is located in the tributary or at the Jordan Operations compound. The tributary location would not require an aeration unit, but costs for the collection trough would be higher due to the greater distance this site is from the Jordan River mainstem. Therefore, for the purpose of providing rough estimates, differences in costs have been ignored.

**Table 4. Estimated fabrication costs for the main components of a pink salmon incubation facility.**

| **Description** | **Estimated Cost** |
|---|---|
| Circular Incubators ($3000 ea.) | $ 9000 |
| Distribution Box | $ 2000 |
| Collection Box | $ 1500 |
| Atkin Cells (4 cells) | $ 2500 |
| Aeration bulk box and stand | $ 2500 |
| Media–rings (1”dia.) 23 cu.ft. | $ 1200 |
| Plumbing 11/2 PVC piping, flanges, elbows and valves | $ 500 |
| Collection trough | $ 2000 |
| **Total (*excluding applicable taxes)*** | **$21,200.00** |

## 7.9 Monitoring/Evaluation

As part of a pink salmon transplant program in the Jordan River, an associated monitoring program would be designed to evaluate the success of the introductions in the Jordan River. The following presents a brief monitoring approach that may be taken to. This monitoring program has three components:

- Through repeated stream surveys, enumerate the distribution and abundance of spawning pink salmon in the Lower Jordan River. Stream walks would be carried out by qualified fisheries technicians 2-3 times/week from the end of August to the end of September.
- Where observations of significant spawning warrants follow up, assess spawning success through in-river assessments (i.e. hydraulic sampling).
- Analyse returns to other systems in order to determine how the Jordan River escapement compares to other watersheds (a low return of adults to the Jordan River may be indicative of poor marine survival if other systems are also experiencing low returns).

If adult returns to the Jordan River are good, then rehabilitation prescriptions to improve spawning habitat for pink salmon in the reach upstream of the tailrace may be developed. Gravel placement prescriptions for this reach of the Jordan River would likely consist of smaller pockets of gravel combined with larger boulders. An anlysis of the impacts of a 1992 spill from the Terzaghi Dam on spawning habitat in the Bridge River found that the presence of large boulders upstream and within the spawning bed can provide some flood protection and provide refuge for fish (BC Hydro, 1993). The analysis, using a 2 dimensional computer modeling system, shows how large boulders create low velocity zones both upstream and downstream of the boulder, which would reduce erosion and provide resting areas for fish.

In addition to habitat restoration, a program would be developed to track the benefits of a return of pink adults on the local recreational fishery (creel census) and spin-off economic benefits in the local community.

### Assessment of Fish Stranding Potential in the lower Jordan River below the tailrace

In addition to project evaluation monitoring described above, a monitoring program would include surveys to determine the potential stranding of adults and juveniles in the river downstream of the tailrace.

The Jordan River Hydroelectric facility operates as a ‘peaking plant’, generating up to 170 MW of electricity during two peak demand periods daily. There is no ramp-down protocol included in the normal operations.

On April 26, 2005, a trial was conducted to gain information on the risk of fish stranding in the lower Jordan River below the tailrace associated with the normal operations of the power plant. The trial was conducted during typical low flows for the period, and during a low tide. The upstream limit of tidal influence in the lower Jordan River is at the tailrace. Prior to the trial, the reach below the tailrace to the WFP log sort facility was walked and two areas were identified as having potential to cause fish stranding:

- A short riffle section approximately 35 m long, 100 m downstream of the tailrace (Photo 7);
- A large (100 m long) riffle section immediately upstream of the log sort, 300 m downstream of the tailrace (Photo 8).

Once the sites were identified, the plant was started up to ~130 MW generation, and after 15 minutes of operation, the plant was shut down following normal procedures. Flow reductions in the lower river were observed at the lower-most riffle section during the shutdown procedure (Photos 9-20). The river level was measured using a temporary staff gauge every 2 minutes (Table 3). After 36 minutes, the flow in the river had returned to close to normal flows that were observed prior to start-up of the plant.

This lower riffle section was recognized as having a low to moderate risk of stranding fish, as the shallow gravel/cobble bar on the left bank becomes dewatered during plant shutdown. However, rehabilitative measures could be taken to alleviate the risk. One option is to reshape the channel in this section, such that there is a deeper thalweg along one side of the river. This would require Section 9 approval, fish salvaging and approximately 4 days with an EX200 excavator at an estimated cost of $5000 (M. Sheng, *pers. comm.*). The second option is to construct a riffle/weir at the downstream end of the riffle section in order to backwater the entire section. The weir would have typical design features as per Newbury and Gaboury, 1993, with a v-shape crest, a 4:1 upstream and a 20:1 downstream slope (Figure 5). This structure would require large quantities of large rock and is estimated to cost between $70,000 and $100,000. Also, sediment transport rates in the Jordan River would need to be determined before this project is considered due to the risk of in-filling upstream of the weir (M. Sheng, *pers. comm.*).

**Table 5. Relative water levels measured approximately 400 m downstream of the tailrace during flow reductions associated with normal plant shut-down operations at Jordan River.**

| Time | Relative water level in river (m) | Time | Relative water level in river (m) |
|---|---|---|---|
| 12:02 | .50 | 12:22 | .14 |
| 12:04 | .47 | 12:24 | .11 |
| 12:06 | .45 | 12:26 | .09 |
| 12:08 | .44 | 12:28 | .07 |
| 12:10 | .41 | 12:30 | .06 |
| 12:12 | .35 | 12:32 | .05 |
| 12:14 | .29 | 12:34 | .04 |
| 12:16 | .24 | 12:36 | .03 |
| 12:18 | .19 | 12:38 | .02 |
| 12:20 | .17 | | |

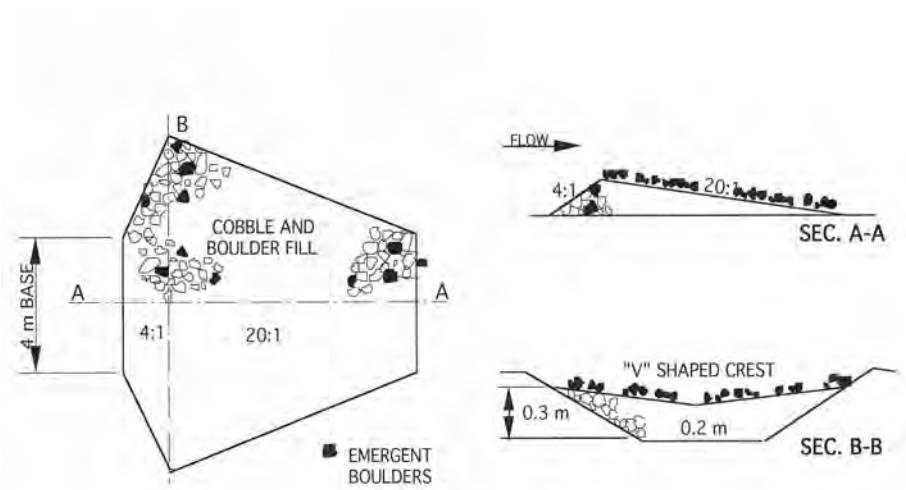


**Figure 5. Schematic diagram of a typical "Newbury" spawning riffle structure.**

## 8.0 RECOMMENDATIONS

1) From the data that has been assembled to date, the preferred option for establishing a pink salmon incubation facility at Jordan River would have the following components:

- A donor stock of 0.5 million pink salmon eggs from Weaver Creek (for odd year pinks) incubated at the Chehalis R. Hatchery to the eyed stage, then transported to Jordan River.
- Even year pinks from Quinsam Hatchery, transported by air to Jordan River (or a nearby location for aircraft landing) as eggs and milt.
- Construction of an incubation facility at the BC Hydro Jordan River Operations compound.

2) If an incubation facility at BC Hydro is not feasible, then further assessment of the tributary on the west side of the river (Option 2) will be necessary, specifically to identify sediment transport during high flows, discharge during dry periods in the winter and a more detailed temperature regime.

3) If significant numbers of pink salmon adults return to the Jordan River, a thorough habitat assessment will be conducted in the reach upstream of the tailrace and prescriptions to improve spawning habitat will be developed.

## 9.0 ACKNOWLEDGEMENTS

We are grateful for the financial support for this study from BC Hydro through the Bridge Coastal Fish and Wildlife Restoration Program, and Fisheries and Oceans Canada (Resource Restoration). We would also like to thank the following individuals for their valuable contributions: Al McLean (BC Hydro) for assistance with evaluating Option 1 and arranging fish stranding trial; Dwayne Walsh (BC Hydro JOR) for providing plumbing cost estimates; Greg Bonnell for researching broodstock sources and Western Forest Products Ltd. for property access and support for Option 2.

## 10.0 REFERENCES

BC Hydro, 1993. Bridge River Spawning Platforms. Impact of 1992 Spill and Assessment of Alternative Design Options. BC Hydro, Hydroelectric Engineering Division. Report No. H2773.

BC Hydro, 2002. Consultative Committee Report: Jordan River Water Use Plan. BC Hydro, Burnaby, B.C.

DFO, 2001. Jordan River Coho Salmon Bioassay (egg to fry stage) for Metal Toxicity Assessments. Fisheries and Oceans Canada, Nanaimo, B.C. unpublished report.

Newbury, R.W. and M.N. Gaboury. 1993. Stream Analysis and Fish Habitat Design. A Field Manual. Newbury Hydraulics Ltd., Gibsons, BC.

Norum, S. and M. Johannes. 2004. Air and Water Temperature Summary and Analysis for Goldstream River and the Howard English Hatchery, Victoria, BC. Northwest Ecosystem Institute, Lantzville, BC. 27 p.

RRL Recreation Resources Ltd. 2001. Jordan River Historical Salmonid Survey. Prepared for BC Hydro by RRL Recreation Resources Ltd., Cobble Hill, B.C.

Wright, M.C. and E. Guimond. 2003. Jordan River Pink Salmon Incubation Study. Fisheries and Oceans Canada, Nanaimo, BC. 27 p.

**Personal Communication**

| | |
|---|---|
| Brian Anderson | Fish Introductions and Transfers Committee |
| Greg Bonnell | Assessment and Support Biologist, DFO |
| M. Sheng | Restoration Biologist, DFO |

**Photo 1.** Proposed location for a pink salmon incubation facility at the BC Hydro Jordan River Operations compound.

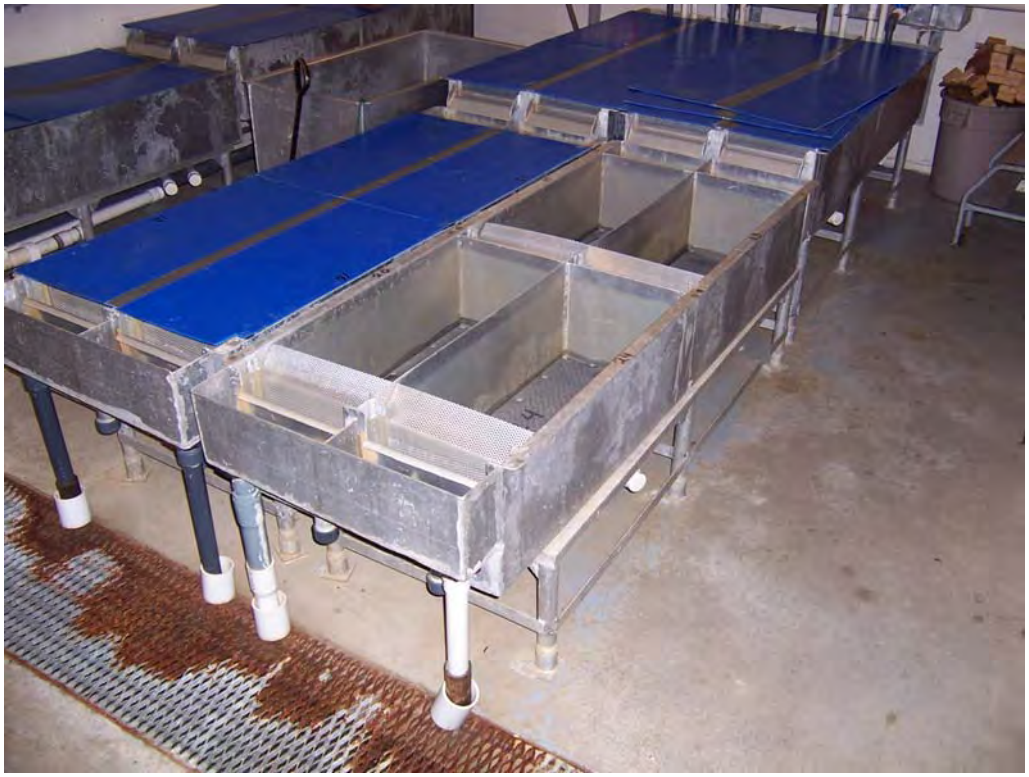

**Photo 2.** Example of Atkin eyeing boxes to accommodate pink salmon eggs from fertilization to the eyed stage.

**Photo 3.** Example of a circular incubator to accommodate pink salmon eggs from the eyed stage to swim-up stage.

**Photo 4.** Typical habitat in the Jordan River upstream of the tailrace. Spawning gravel presently consists of small pockets in relation to boulders.

**Photo 5.** Mouth of the Jordan River at low tide and zero generation, looking downstream from HWY 14 (04/26/05 10:00).

**Photo 6.** Jordan River at low tide and zero generation, looking upstream from HWY 14 (04/26/05 10:00).

**Photo 7.** Lower Jordan River during low tide and low flow, looking downstream from the tailrace (800 m from mouth) at zero generation. The area in the foreground was identified as having potential to strand fry/adults during generator shutdown (04/26/05 11:00).

**Photo 8.** Lower Jordan River during low tide and low flow, looking upstream, 350 m from the mouth, at zero generation. The area in the foreground was identified as having potential to strand fry/adults during generator shutdown (04/26/05 11:10).

**Photo 9.** Lower Jordan River during low tide and low flow, looking downstream at the tailrace at zero generation (04/26/05 11:30).

**Photo 10.** Lower Jordan River during low tide and low flow, looking downstream at the tailrace at 75% generation, or 130 MW (04/26/05 11:50).

**Photo 11.** Lower Jordan River during low tide and low flow, looking upstream, 350 m from the mouth (Photo 8), at 75% generation (130 MW). The river is flowing at approximately 50 cms; staff gauge reading is 0.5 m (04/26/05 12:02).

**Photo 12.** Lower Jordan River, 350 m from the mouth, looking from right to left bank, during normal plant shutdown operations. Staff gauge reading is 0.41 m (04/26/05 12:10).

**Photo 13.** Lower Jordan River, 350 m from the mouth, looking upstream, during normal plant shutdown operations. Staff gauge reading is 0.29 m (04/26/05 12:14).

**Photo 14.** Lower Jordan River, 350 m from the mouth, looking from right to left bank, during normal plant shutdown operations. Staff gauge reading is 0.29 m (04/26/05 12:14).

**Photo 15.** Lower Jordan River, 350 m from the mouth, looking upstream, during normal plant shutdown operations. Staff gauge reading is 0.19 m (04/26/05 12:18).

**Photo 16.** Lower Jordan River, 350 m from the mouth, looking from right to left bank, during normal plant shutdown operations. Staff gauge reading is 0.19 m (04/26/05 12:18).

**Photo 17.** Lower Jordan River, 350 m from the mouth, looking upstream, during normal plant shutdown operations. Staff gauge reading is 0.09 m (04/26/05 12:26).

**Photo 18.** Lower Jordan River, 350 m from the mouth, looking from right to left bank, during normal plant shutdown operations. Staff gauge reading is 0.09 m (04/26/05 12:26).

**Photo 19.** Lower Jordan River, 350 m from the mouth, looking upstream, during normal plant shutdown operations. Staff gauge reading is 0.04 m (04/26/05 12:34).

**Photo 20.** Lower Jordan River, 350 m from the mouth, looking from right to left bank, during normal plant shutdown operations. Staff gauge reading is 0.04 m (04/26/05 12:34).

Appendix A

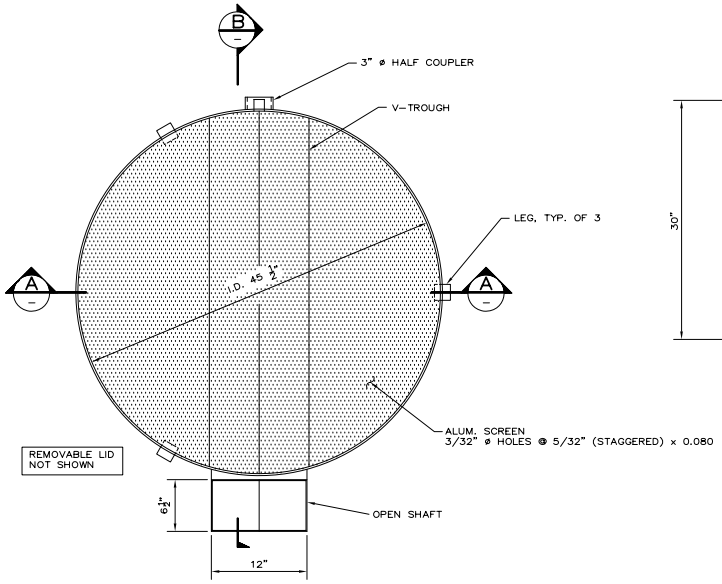


PLAN
INCUBATOR

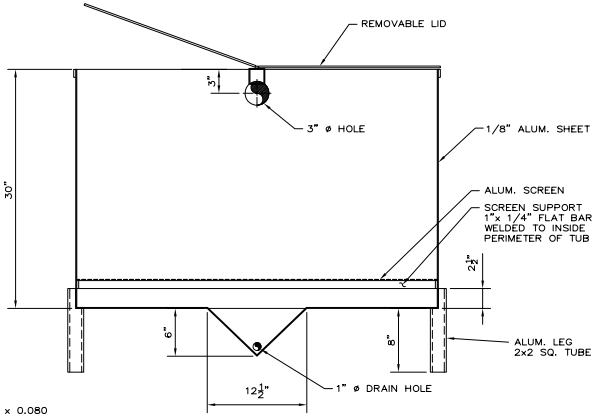


SECTION A

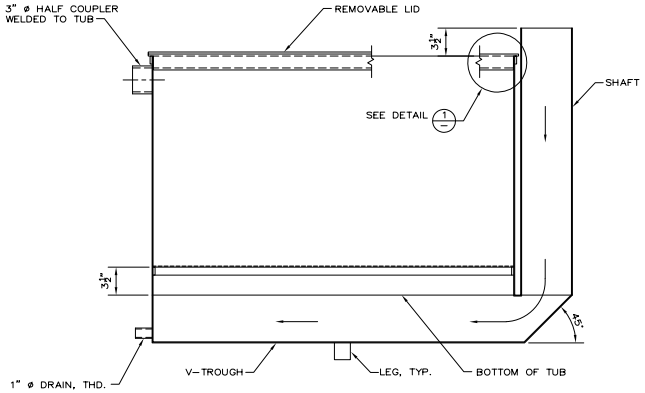


SECTION B

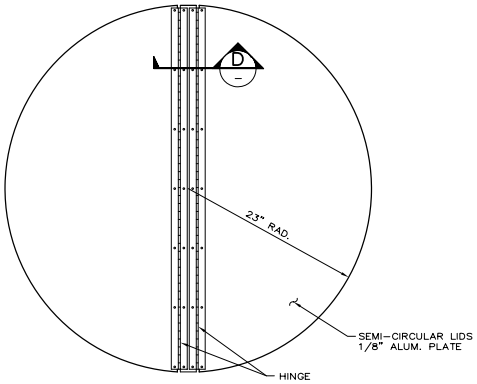


PLAN
REMOVABLE LID

NOTE: CUT LIDS TO SUIT HINGE DETAIL

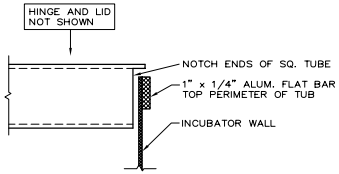


DETAIL 1
HALF SCALE

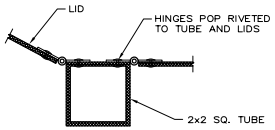


SECTION D
HALF SCALE

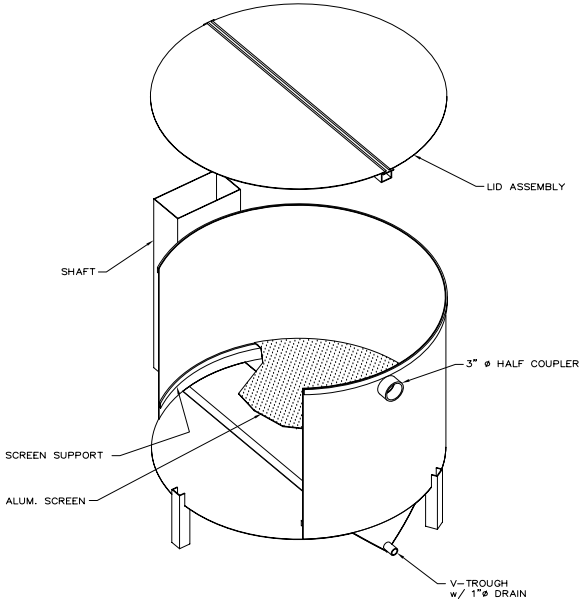


CUT-AWAY 3D VIEW
NOT TO SCALE

FISHERIES AND OCEANS CANADA
HABITAT AND ENHANCEMENT BRANCH

| DWG. NO. | REFERENCE DRAWINGS | NOTES | NO. | DATE | REVISIONS |
|---|---|---|---|---|---|
| | | | | | |

DESIGNED: RF
DRAWN: DT
CHECKED
RECOMMENDED
APPROVED
APPROVED

CIRCULAR INCUBATOR
ALUMINUM FABRICATION
PLAN, SECTION AND DETAILS

SCALE: 1 1/2"=1'-0"
DATE: AUG. 1998
DRAWING NUMBER: 4-6-356
REVISION

C:\Projects\ZZ FILES\standard drawings\4-6-356 circular Incubator - fabrication.dwg, A1, 24/03/2005 10:07:39 AM

Appendix B

**Project #** 04.Jo.01

## Financial Statement Form

| | BUDGET | | ACTUAL | |
|---|---|---|---|---|
| | **BCRP** | **Other** | **BCRP** | **Other** |
| **INCOME** | | | | |
| *Total Income by Source* | 4,760.00 | 1,640.00 | 4,760.00 | 2,100.00 |
| **Grand Total Income** **(BCRP + other)** | | 6,400.00 | | 7,203.00 |
| | | | | |
| **EXPENSES** | | | | |
| ***Project Personnel*** | | | | |
| Wages | | 1,640.00 | | 1,750.00 |
| Consultant Fees | 4,760.00 | | 4,500.00 | |
| *(List others as required)* | | | | |
| | | | | |
| | | | | |
| | | | | |
| | | | | |
| ***Materials & Equipment*** | | | | |
| Equipment Rental | | | | |
| Materials Purchased | | | | |
| Travel Expenses | | | 260.00 | 350.00 |
| Permits | | | | |
| *(List others as required)* | | | | |
| | | | | |
| | | | | |
| | | | | |
| | | | | |
| ***Administration*** | | | | |
| Office Supplies | | | | |
| Photocopies & printing | | | | |
| Postage | | | | |
| *(List others as required)* 5% Admin Fees | | | | 343.00 |
| | | | | |
| | | | | |
| | | | | |
| *Total Expenses* | 4,760.00 | 1,640.00 | 4,760.00 | 2,443.00 |
| **Grand Total Expenses** **(BCRP + other)** | | 6,400.00 | | 7,203.00 |
| | | | | |
| **BALANCE** **(Grand Total Income – Grand Total Expenses)** | *The budget balance should equal $0* | 0.00 | *The actual balance might not equal $0** | 0.00 |

* Any unspent BCRP financial contribution to be returned to: BC Hydro, BCRP
6911 Southpoint Drive (E14)
Burnaby, B.C. V3N 4X8
ATTENTION: JANICE DOANE

Appendix B

Not applicable to this study

**Project #** 04.Jo.01

## Performance Measures

Using the performance measures applicable to your project, please indicate the amount of habitat actually restored/enhanced for each of the specified areas (e.g. riparian, tributary, mainstream).

| **Performance Measures – Target Outcomes** | | | | | | | | | | | | | |
|---|---|---|---|---|---|---|---|---|---|---|---|---|---|
| **Project Type** | **Primary Habitat Benefit Targeted of Project ($m^2$)** | **Primary Target Species** | **Habitat ($m^2$)** | | | | | | | | | | |
| | | | Estuarine | In-Stream Habitat – Mainstream | In-stream Habitat – Tributary | Riparian | Reservoir Shoreline Complexes | Riverine | Lowland Deciduous | Lowland Coniferous | Upland | Wetland |
| **Impact Mitigation** | | | | | | | | | | | | | |
| Fish passage technologies | Area of habitat made available to target species | | | | | | | | | | | | |
| Drawdown zone revegetation/stabilization | Area turned into productive habitat | | | | | | | | | | | | |
| Wildlife migration improvement | Area of habitat made available to target species | | | | | | | | | | | | |
| Prevention of drowning of nests, nestlings | Area of wetland habitat created outside expected flood level (1:10 year) | | | | | | | | | | | | |
| **Habitat Conservation** | | | | | | | | | | | | | |
| Habitat conserved – general | Functional habitat conserved/replaced through acquisition and mgmt | | | | | | | | | | | | |
| | Functional habitat conserved by other measures (e.g. riprapping) | | | | | | | | | | | | |
| Designated rare/special habitat | Rare/special habitat protected | | | | | | | | | | | | |
| **Maintain or Restore Habitat forming process** | | | | | | | | | | | | | |
| Artificial gravel recruitment | Area of stream habitat improved by gravel plmt. | | | | | | | | | | | | |
| Artificial wood debris recruitment | Area of stream habitat improved by LWD plcmt | | | | | | | | | | | | |
| Small-scale complexing in existing habitats | Area increase in functional habitat through complexing | | | | | | | | | | | | |
| Prescribed burns or other upland habitat enhancement for wildlife | Functional area of habitat improved | | | | | | | | | | | | |
| **Habitat Development** | | | | | | | | | | | | | |
| New Habitat created | Functional area created | | | | | | | | | | | | |