1mA Current Source Utilizing a Widlar Current Mirror (2025)

Abdulilah, *student,* Joshua Oliveira, *student, Loyola Marymount University*

ABSTRACT: This experiment investigates the design, simulation, and implementation of a constant current source utilizing the Widlar current source configuration. The goal was to design a circuit capable of delivering a stable 1mA current, regardless of variations in load resistance. The design was evaluated through Multisim simulations and practical implementation in the laboratory, using the CA3046 NPN transistor array chip. Simulations were conducted to determine the range of load resistances for which the design specifications were met, followed by a parametric analysis to examine the relationship between load current and resistance. The experimental results confirmed the accuracy of the simulation outcomes, demonstrating the circuit's ability to maintain a consistent output within the specified load resistance range. Discrepancies between theoretical calculations and measured values were analyzed, along with the calculation of the circuit's output resistance.

I. INTRODUCTION

The design of an efficient constant current source is increasingly important in the field of electrical engineering, given its widespread use in providing stable currents for electronic components and serving as a reference for more complex systems. This work focuses on the design and analysis of a constant current source based on the Widlar configuration. The primary objective is to achieve a stable current of 1 milliampere across varying load conditions. Ensuring a consistent current supply in electronic circuits, regardless of fluctuations in the external load, underscores the significance of this study. To implement this design, the CA3046 NPN transistor array chip was used. The approach involved both theoretical design and verification through MultiSim simulations. The design's adherence to the specified parameters was thoroughly assessed through extensive simulation scenarios and experimental testing.

II. SYSTEM DESCRIPTION

The Widlar current source designed to meet the lab objectives is depicted in Fig. 1. This current source comprises two resistors: a reference resistor (R_{ref}) and an emitter resistor (R_e).

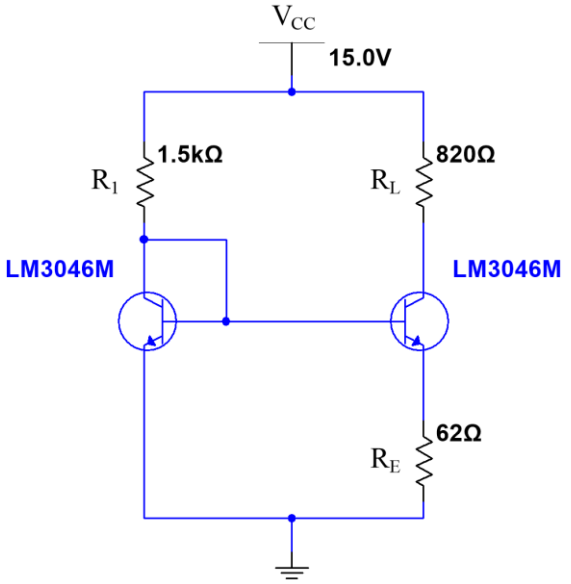

Figure 1: Final circuit diagram of the Widlar current source.

To design the circuit first the reference current (I_{REF}) was established. An I_{REF} = 10mA was chosen to meet the <20mA requirement, as well as ensure (1) was true, as to ensure accuracy and reduce the sensitivity to varying impedances, the reference current should be much greater than the resulting current of 1mA. β/β+1 is assumed to be insignificant in all calculations

$$10I_o \leq I_{REF} \quad (1)$$

A V_{CC} = 15V was chosen, allowing for a large operating range and reducing the sensitivity to varying impedances than a lower source voltage, but still low enough to maintain a manageable power. Utilizing (2) for the greatest symmetrical swing, and the constraint of an I_o = 1mA, R_E can be calculated, as seen in (3).

$$I_o R_E = V_T ln\left(\frac{I_{REF}}{I_o}\right) \quad (2)$$

$$R_E = \frac{0.026 ln\left(\frac{0.010}{0.001}\right)}{0.001} = 59.87\Omega \quad (3)$$

A value of 62Ω will be used as it is in the lab. Assuming a V_{BE} = 0.7V, utilizing (4), the R_1 value is derived as seen in (5).

$$R_1 = \frac{V_{CC} - V_{BE}}{I_{REF}} \quad (4)$$

$$R_1 = \frac{15-0.7}{0.010} = 1430\Omega \quad (5)$$

A value of 1.5kΩ will be used as it is in the lab. To determine R_C, first it must be ensured that the transistor

stays in active mode. V_B can be calculated to be 0.76 as seen in (7).

$$V_B = V_{BE} + I_o R_E = 0.7 + 0.001(59.87) = 0.76 \quad (7)$$

Utilizing a $V_{CE(sat)}$ as the same as V_{BE}, the maximum R_L can be calculated in (8).

$$R_L \leq \frac{15 - V_{CE(sat)} - I_o R_E}{I_o} = \frac{15 - 0.2 - 0.001(59.87)}{0.001} = 14{,}740\Omega \quad (8)$$

B. Verification

Using the simulated values, the constraints of the lab can be confirmed as seen in (9)-(12).

$$62 = \frac{0.026 ln\left(\frac{0.010}{I_o}\right)}{I_o} => I_o = 0.99mA \quad (9)$$

$$V_B = V_{BE} + I_o R_E = 0.7 + 0.001(62) = 0.77 \quad (10)$$

$$R_L \leq \frac{15 - V_{CE(sat)} - I_o R_E}{I_o} = \frac{15 - 0.2 - 0.001(62)}{0.001} = 14{,}738\Omega \quad (11)$$

$$62 = \frac{0.026 ln\left(\frac{I_{REF}}{0.001}\right)}{0.001} => I_{REF} = 10.6mA \quad (3)$$

III. Experimental Evaluation

A. Performance Metrics

To evaluate the performance of the Widlar current source, the load current was measured using an ammeter in a digital multimeter across various load resistors. Five RL values, all less than the maximum load resistance, were used to measure the load current when the current source was set to output 1mA. The load current was then recorded for resistors exceeding the maximum RL value. Additionally, the output resistance was determined using the current division method. If the measured load current remained close to 1mA and began to decrease only when RL exceeded its maximum value, the experiment can be deemed successful.

B. List of Materials

Hardware:

- CA3046 npn transistor array chip
- DC power supply
- Digital multimeter
- NI Educational Laboratory Virtual Instrument Suite (NI ELVIS II+)
- Alligator-banana jumper cable (2 units)
- Jumper wires
- 60Ω resistor
- 1.5kΩ resistor
- Load resistors

Software:

- Microsoft Excel

C. Experimental Procedure

The Widlar current source was initially constructed on the NI ELVIS II+ platform using the CA3046 NPN transistor array chip, as shown in the designed circuit in Figure 1. The load current was measured in series with an ammeter through various load resistors (R_L). Five values of R_L, ranging between zero and $R_{L,max}$, were selected for this measurement, and the corresponding load currents were recorded in an Excel datasheet. The load current was then measured for resistor values exceeding $R_{L,max}$, including values just above, two times, and three times $R_{L,max}$. These measurements were also entered into the Excel datasheet. To visualize the data, the load current was plotted against R_L using Excel's scatter plot function, with I_C on the y-axis and R_L on the x-axis. A separate plot was created for R_L values less than the maximum to determine the slope by adding a linear trendline and displaying its equation.

The output resistance was determined by placing R_L in parallel with R_{out}, using a shorted load to allow current division. Using the current division method, as seen in equation (5), the load current and the corresponding R_L values (chosen from the load resistors below ($R_{L,max}$) were used to measure Rout.

$$I_L = \frac{Rout}{(RL+Rout)} \times I_{short} \quad (5)$$

Once the measurement for Rout was obtained, it was recorded in the Excel datasheet.

D. Results

Table I shows the measured load currents corresponding to five different load resistor values, all of which were less than the maximum load resistance.

TABLE I: I_L Corresponding to Different Load Resistors Below $R_{L,max}$

Trial	**1**	**2**	**3**	**4**	**5**	**6**
R_L(kΩ)	1	3.9	7.5	10	11	12
I_L(mA)	1.19	1.18	1.17	1.16	1.16	1.16

Table II presents the load current for resistors greater than the maximum load resistance, with values chosen just above, two times, and three times $R_{L,max}$.

TABLE II: I_L Corresponding to Different Load Resistors Greater Than $R_{L,max}$

Trial	**1**	**2**	**3**
R_L(kΩ)	16	30	47
I_L(mA)	0.940	0.493	0.321

Table III compares the calculated and measured maximum load resistance ($R_{L,max}$).

TABLE III: Measured and Calculated $R_{L,max}$

	Measured	**Calculated**
$R_{L,max}$(kΩ)	13.5	14.7

The measured load currents were plotted against their corresponding load resistance values using Excel, as shown in Fig. 2. The y-axis represents the load current, while the x-axis corresponds to the load resistance.

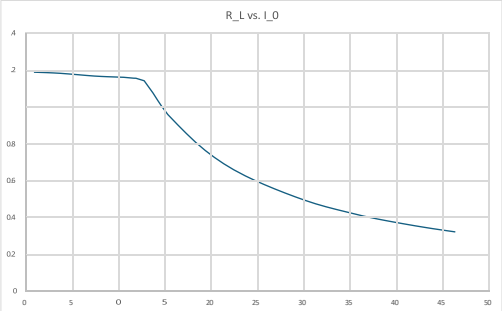

Figure 2. Plot of the measured load currents at each load resistance value.

The values corresponding to load resistances below the maximum value were also plotted to determine the slope, as shown in Figure 3.

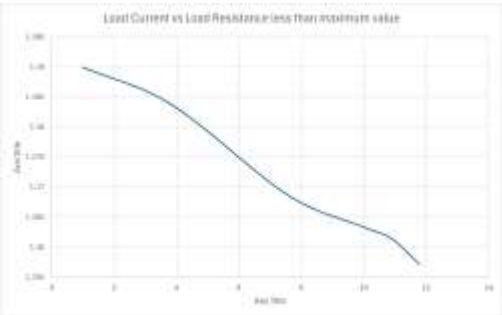

Figure 3. Plot and slope of the measured load currents at each load resistance below its maximum value.

One difference seen from the calculated load resistance values and the corresponding current is the slope of the line with the load resistances within range was greater than expected. This means that the current source was not as precise at 1mA across varying loads as expected. This could be due to a different V_T value than 0.026V as what was utilized in the calculations. As seen in this previous MultiSim simulation in Figure 3.

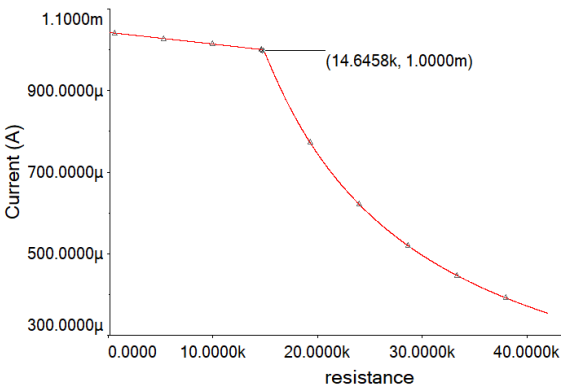

Figure 3: Simulation of current I_L

Table IV compares the calculated and measured output resistance (R_{out}).

TABLE IV: Measured and Calculated R_{out}

	Measured	**Calculated**
R_{out}(kΩ)	11.16	6.84

E. Discussion of Results

The data in Table I indicates that the Widlar current source successfully met the lab objectives. When R_L was less than the maximum load resistance, I_L remained close to 1mA, as expected. However, as shown in Table II, when R_L exceeded the maximum resistance, I_L began to decrease. This reduction is attributed to the transistor entering the saturation region at higher load resistances. The measured maximum load resistance was 11.78kΩ, slightly lower than the calculated value of 12kΩ, likely due to the unavailability of a standard resistor value closer to 12kΩ. The closest available standard resistors were 12kΩ and 13kΩ, with the 12kΩ resistor being the largest value that maintained a 1mA load current. The graph in Fig. 2 shows the expected behavior: a straight line close to 1mA with a small negative slope for RL values below the maximum. For RL values above the maximum, the slope is negative, as expected, and the current decreases, as seen in Figure 3.

The measured output resistance, 50kΩ, is significantly larger than the calculated value of 11.16kΩ, which is consistent with expectations for such a current source. The discrepancy may be due to variations in the transistor parameters, such as the value of β or ro, used in the calculation.

A. LIMITATIONS

The technical goals were achieved through a combination of theoretical study and simulation during the design phase. However, a key distinction between simulation in MultiSim and physical implementation lies in the accuracy of component values and the effects of external variables. MultiSim simulations provide an idealized environment with precise component values and no environmental disturbances, while real-world implementations can be affected by variations in component tolerances, parasitic elements, and other environmental factors, which may influence circuit performance.

II. CONCLUSIONS

In conclusion, the experiment successfully demonstrated the technical feasibility of constructing a Widlar current source. The key advantages of the design include its ability to maintain a stable output current across a wide range of load resistances, as predicted by the pre-lab calculations and confirmed through experimentation. The current source was tested in MultiSim with varying load resistors, showcasing the strengths of the proposed design. However, the experimental results also exposed some limitations, such as the design's sensitivity to component variations and its restricted ability to maintain a constant current within a practical range of load resistances. These challenges underscore the importance of careful component selection and may require adjustments to accommodate real-world variations. Overall, the experiment emphasizes the need to balance

theoretical design considerations with practical implementation challenges and provides valuable insights into the design and application of constant current sources.

REFERENCES

[1] “Constant Current Source,” Loyola Marymount University, Los Angeles, CA.

[2] N. Ula, Introduction to ARM Assembly Language programming using Raspberry Pi, Loyola Marymount University, EECE3200-Lab01Tutorial (1).pdf, 2025

[3] OpenAI, ChatGPT, Loyola Marymount University, ChatGPT, 2025