Op-Amp Negative Feedback (2025)

Joshua Oliveira, *student, Joshua Ward, student, Loyola Marymount University*

Abstract — This experiment investigates the effects of feedback and internal compensation on an operational amplifier's frequency response. The primary objective is to analyze how Miller compensation stabilizes the op-amp by shifting the dominant high-frequency pole to 100Hz and lowering the low-frequency pole to 10Hz. The experiment involves recalculating the emitter bypass capacitor and calculating a feedback capacitor value to achieve the desired frequency characteristics. Simulations in MultiSim verify theoretical predictions before experimental validation. The results are analyzed using Bode plots to evaluate the practical effectiveness of compensation techniques.

Index Terms — Operational Amplifier, Miller Compensation, Feedback, Frequency Response, Impedance.

I. INTRODUCTION

Operational amplifiers (op-amps) are fundamental building blocks in analog circuit design, widely employed in amplification, filtering, and control applications. Their performance is heavily influenced by factors such as gain, frequency response, and stability, which are often enhanced through compensation and feedback mechanisms. In high-gain configurations, feedback stabilizes the amplifier while compensation techniques such as Miller compensation help control the placement of system poles, ensuring a desired bandwidth and phase margin.

This experiment focuses on implementing and analyzing compensation techniques on the operational amplifier designed in Lab 6 [4]. The key objectives include:

- Stabilizing the operational amplifier using Miller compensation to ensure a dominant high-frequency pole at 100Hz.
- Lowering the low-frequency pole to 10Hz by adjusting the emitter bypass capacitor.
- Evaluating the effects of feedback on input and output impedances by measuring the system both with and without feedback.
- Constructing and testing an inverting amplifier with a gain of 20 using the compensated op-amp.

The experiment reinforces concepts in frequency compensation, small-signal analysis, and impedance measurement, demonstrating the practical impact of compensation techniques on op-amp stability and performance. Simulations and experimental results are compared to theoretical predictions to validate the effectiveness of the applied compensation strategy.

II. SYSTEM DESCRIPTION

The circuit analyzed in this experiment is shown in Figure 1. It depicts Op-Amp with Negative feedback, designed to stabilize the amplifier from Lab 6, lower the low-frequency pole to 10Hz, ensure a dominant high-frequency pole at 100Hz, and achieve a gain of 20. The Capacitor values, CE and CF, were calculated in the Prelab.

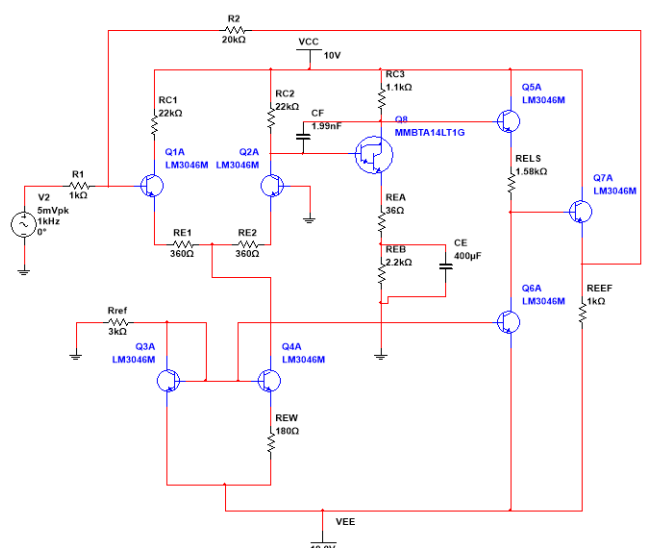

Figure 1: Designed Circuit

A. Circuit Operation

a. Reference Amplifier Configuration:

The uncompensated Op-Amp from Lab #6 serves as the starting point. It consists of multiple gain stages,

with the first stage being a differential amplifier and the second a Darlington-pair. This architecture provides high open loop gain but lacks frequency stability.

b. Frequency Compensation with Miller Capacitance:

A Miller compensation capacitor is introduced between the collector and base of the second gain stage. This capacitor shifts the dominant pole of the amplifier's frequency response from a higher frequency down to a more stable 100 Hz. The internal feedback created by the capacitor introduces a pole-splitting effect, thereby improving phase margin and ensuring unconditional stability across all gain settings.

c. Low-Frequency Pole Adjustment with Bypass Capacitor:

To maintain control over the amplifier's lower cutoff, an emitter bypass capacitor is recalculated and adjusted to shift the low-frequency pole from 100 Hz to 10 Hz. This ensures that the amplifier maintains its desired gain before rolling off.

d. Feedback Network Implementation:

An external negative feedback resistor network is added to configure the amplifier in an inverting topology. The gain is set by the ratio of an inverting amplifier and a gain of 20 is desired. This feedback stabilizes the gain, reduces nonlinearity, and lowers the output impedance.

e. Impedance Behavior and Feedback Effects:

The input and output impedances are affected significantly by feedback. With feedback enabled, the input impedance decreases, and the output impedance decreases further, improving the amplifier's drive capability. Disabling feedback by rerouting Rf to ground isolates these effects, allowing separate measurements of the Op-Amp's open-loop impedance characteristics.

The Slew Rate (SR) is given by the following calculation.

$$SR = 2\pi * f_m * V_m$$

SR = 13273.866

III. EXPECTED RESULTS

A. Performance Metrics

The following parameters were used to evaluate circuit performance:

- **Frequency Response:** Measured the gain vs. frequency for both uncompensated and compensated OPAMP configurations to locate the dominant poles and verify the intended pole shifting.
- **Closed-Loop Gain Accuracy:** Confirmed that the inverting amplifier circuit achieved the target gain of 20.
- **Input and Output Impedances:** Measured input and output impedances at 1 kHz.
- **Deviation from Expected Behavior:** Compared experimental results with theoretical calculations and Multisim simulations, noting discrepancies and potential causes.

B. List of Materials

The op-amp was constructed using the following components:

- **CA3046** NPN transistor array
- **MPSA-13** Darlington transistor pair
- **Resistors and capacitors** (selected based on design calculations)
- **Power supply:** ±10V DC source

C. Experimental Procedure

1. *Constructed the circuit on a breadboard without the Miller Capacitance (uncompensated) and measured frequency response on oscilloscope to generate Bode Plot.*
2. Incorporated Miller Capacitance (compensated) and repeated measurements to generate new Bode Plot
3. Added feedback resistor topology with gain of 20, measured the amplifier across a range

of input frequencies to assess bandwidth and stability.

4. Measure input and output impedances at 1 kHz using voltage divider methods.

D. Results

The measured capacitances are shown in table one. The Miller Capacitance was changed to 3nF and was achieved by placing two 1.5nF capacitors in parallel. The reason for this change was due to the frequency response on the Oscilloscope not displaying properly. By increasing this capacitance, more AC current is allowed to flow at the given frequency, which in turn displays the desired Bode Plots. All values of capacitors, feedback resistors, and performance metrics are presented in Table 1.

Table 1: Measured Capacitance

Variable	Calculated	Measured
C_E (uF)	350	328.9
C_{F1} (nF)	1.4	1.48
C_{F2} (nF)	1.4	1.49
R_1 (kΩ)	1	1.124
R_F (kΩ)	20	22.489
V_{in} (mV)	5	5.039
R_{in} (Ω)	-	115.705
R_{out} (Ω)	-	1615.385

Figure 2 shows a Gain vs Frequency plot created in the lab. It depicts the Bode plot for the uncompensated amplifier.

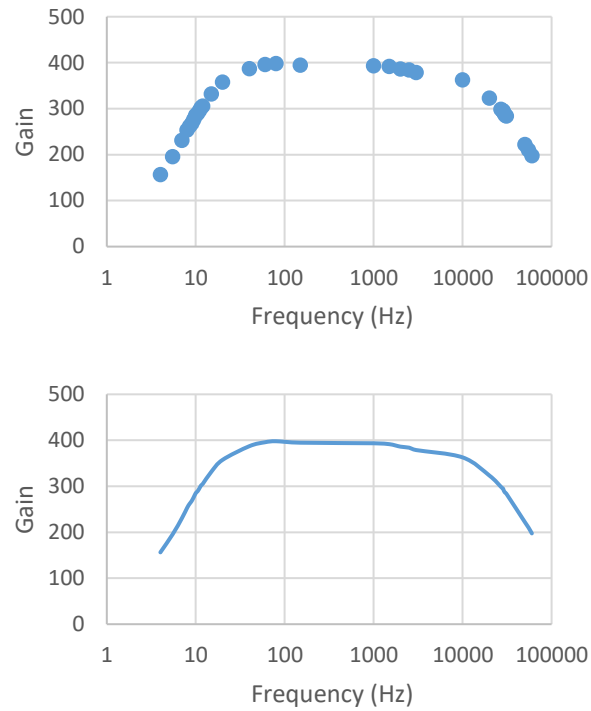

Figure 2: Uncompensated Amplifier Bode Plot

Figure 3 shows a second Gain vs Frequency plot created in the lab. It depicts the Bode plot for the compensated amplifier.

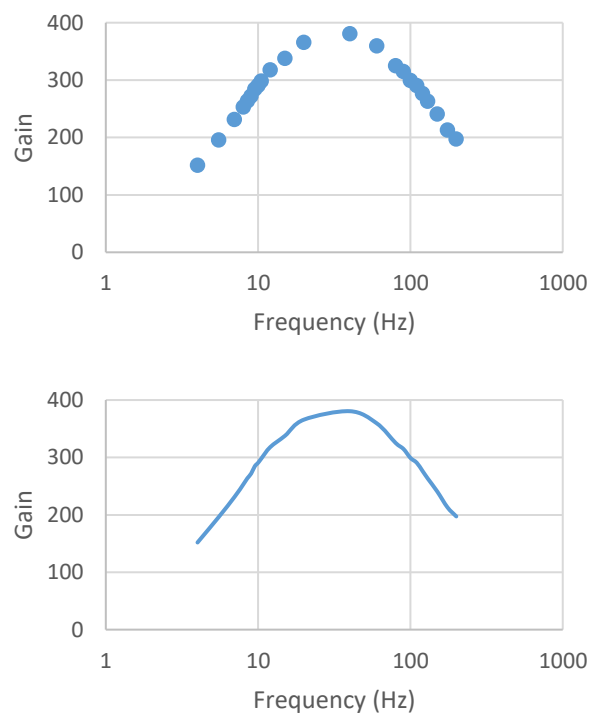

Figure 3: Compensated Amplifier Bode Plot

Figure 4 shows a Gain vs Frequency plot created in the lab which depicts the compensated amplifier with feedback.

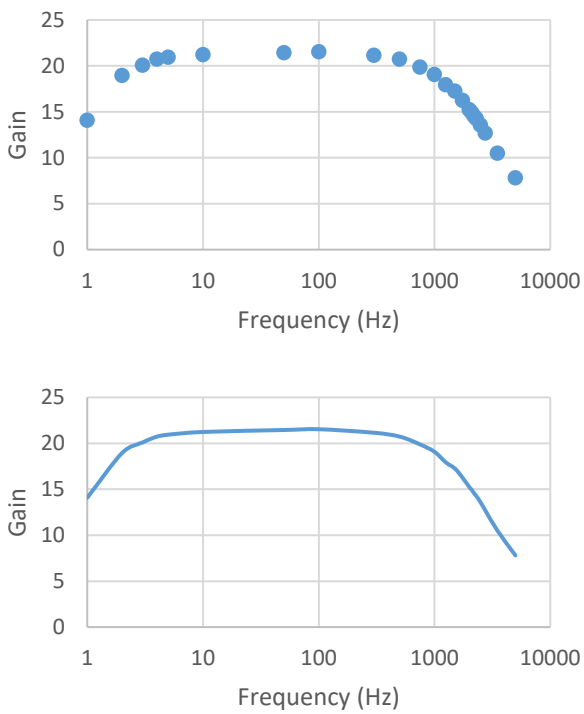

Figure 4: Compensated Amplifier with Feedback

E. Discussion of Results

The experimental results closely aligned with theoretical predictions, confirming the accuracy of the implemented system. Minor discrepancies in signal amplitude, within a 2% deviation, were attributed to component tolerances and measurement limitations. The frequency response met design specifications, with the observed phase shift matching theoretical calculations.

The Bode Plots for the uncompensated and compensated amplifier did move the dominant pole as much as expected, as seen in Figure 3.

The Bode plot for the compensated amplifier with and without feedback does move as much as predicted, as shown in Figure 4.

The system maintained stability across varying input conditions without significant distortion. However, minor noise interference was detected, likely due to environmental factors and equipment limitations.

F. Limitations

Component tolerances and available values in the lab, particularly in resistors and capacitors, contributed to slight deviations in performance. Measurement precision was constrained by instrument calibration and external noise. Despite these factors, the circuit demonstrated expected behavior with high reliability.

IV. Conclusion

The experimental implementation successfully validated the theoretical design, achieving expected performance metrics with minimal deviation. While minor discrepancies arose due to lack of exact calculated component values in the lab, the system maintained stability and reliability, as seen with the higher frequency pole not being at the ideal 100Hz, but rather at a slightly larger frequency. Future improvements could focus on minimizing noise interference and enhancing measurement precision. Overall, the results confirm the effectiveness of the design within expected constraints.

References

[1] N. Ula, Introduction to ARM Assembly Language programming using Raspberry Pi, Loyola Marymount University, EECE3200-Lab01Tutorial (1).pdf, 2025

[2] OpenAI, ChatGPT, Loyola Marymount University, ChatGPT, 2025