Date: October 13, 2024
To: Dr. Huang
From: Joshua Oliveira
Subject: Post-Lab: Power Supply Design

The objective of this experiment was to design, build, and test a regulated power supply capable of delivering a stable 9.1V DC output with a maximum ripple of 1V peak-to-peak. The design used a 14Vrms transformer, 1N4739 Zener diode, and 1N4001 rectifier diodes to regulate the voltage. The circuit's performance was evaluated by measuring the percent regulation as the current load varies between 50% and 110% of the nominal 25mA load current. Key design considerations included selecting appropriate resistor and capacitor values to ensure effective voltage regulation while maintaining component ratings within safe operating limits [1].

The designed power supply can be separated into four essential components:

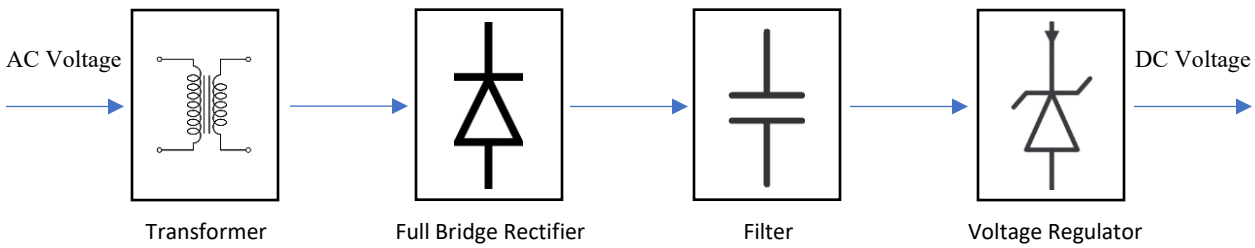

Figure 1: Block Diagram for Power Supply Circuit

Each component of the circuit broken down shown in Figure 1 achieves the following:

- **Transformer**: Reduces the high AC voltage to the $14V_{rms}$ needed.
- **Full Bridge rectifier**: Comprised of four 1N4001 diodes, converts both the two halves of the stepped-down AC voltage from the transformer into a pulsating DC voltage.
- **Filter:** A smoothing capacitor is placed after the rectifier to reduce voltage ripple, smoothing the pulsating DC into a more stable DC voltage.
- **Voltage Regulator:** A series resistor controls the current through the Zener diode, ensuring proper regulation and preventing excessive current, while the 1N4739 Zener diode clamps the voltage to 9.1V, providing a stable, regulated DC output despite variations in load current and input voltage.

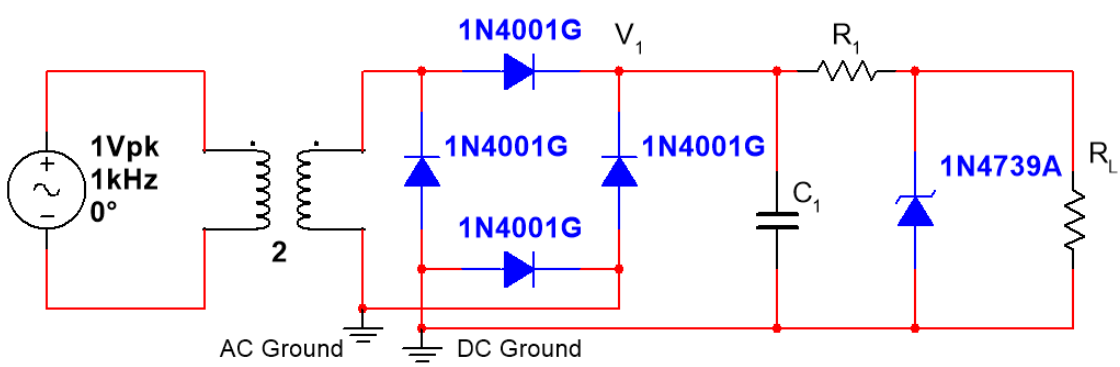

Figure 2: Power Supply Circuit Diagram (Using a Full-Wave Bridge Rectifier)

In the lab, the resistance of R_1, which had a nominal resistance of 270Ω, was measured using an Agilent DMM to ensure accuracy before assembly. Next, each stage of the circuit described in Figure 1 was individually constructed and tested in stages to ensure the process was working as expected, following the design shown in Figure 2. For R_L a resistor with a nominal resistance of 270Ω was put in series with a potentiometer to be able to achieve the three resistances needed to test the 50%, 100%, and 110% load currents. After assembly, 110Vrms at 60Hz is applied to the circuit as the input voltage source. The DC load voltage and load currents are then measured at 50%, 100%, and 110% load currents by adjusting the potentiometer. In each case, the potentiometer is removed from the circuit, and its resistance is measured with the Agilent DMM to obtain the overall R_L in all three cases. [2]

The power supply was tested to see if it performed as expected. Firstly, it was tested to see in the transformer did provide the desired stepdown voltage of $14V_{rms}$. Secondly, it was tested to see if the full bridge rectifier converted the negative AC voltages to positive ones, providing a variable DC voltage by placing a nominal 1kΩ resistor across from the V_1 port to the DC Ground as the load to the rectifier. This conversion between the transformers output AC voltage to the voltage after the full wave rectifier is captured in the graph in Figure 3.

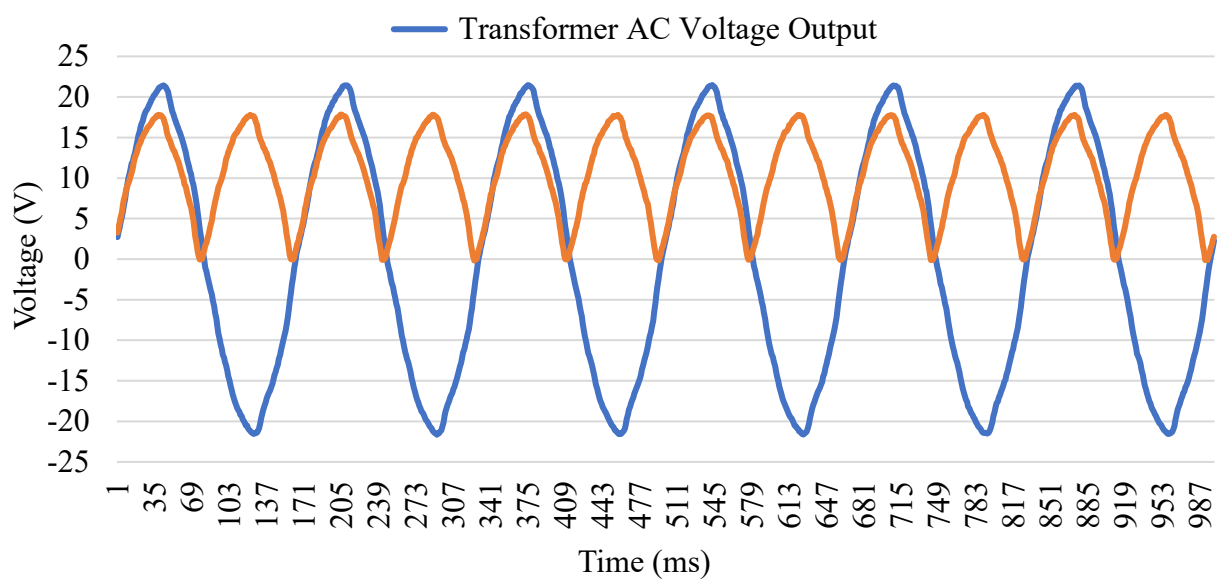

Figure 3: Transformer AC Voltage Output & Full Wave Rectifier Voltage Output

Figure 3 shows that the transformer and the full-wave rectifier worked as intended. The lower peak voltage seen for the full-wave rectifier is due to the voltage drop across the four 1N4001 diodes used in the full wave rectifier. [3] After removing the nominal 1kΩ resistor, the voltage across the 1.502 ± 0.007mF capacitor was measured to verify the reduction of the ripple voltage. As shown in Figure 4 the reduction in ripple voltage was achieved between 10.5V and 11.5V, which is <1V.

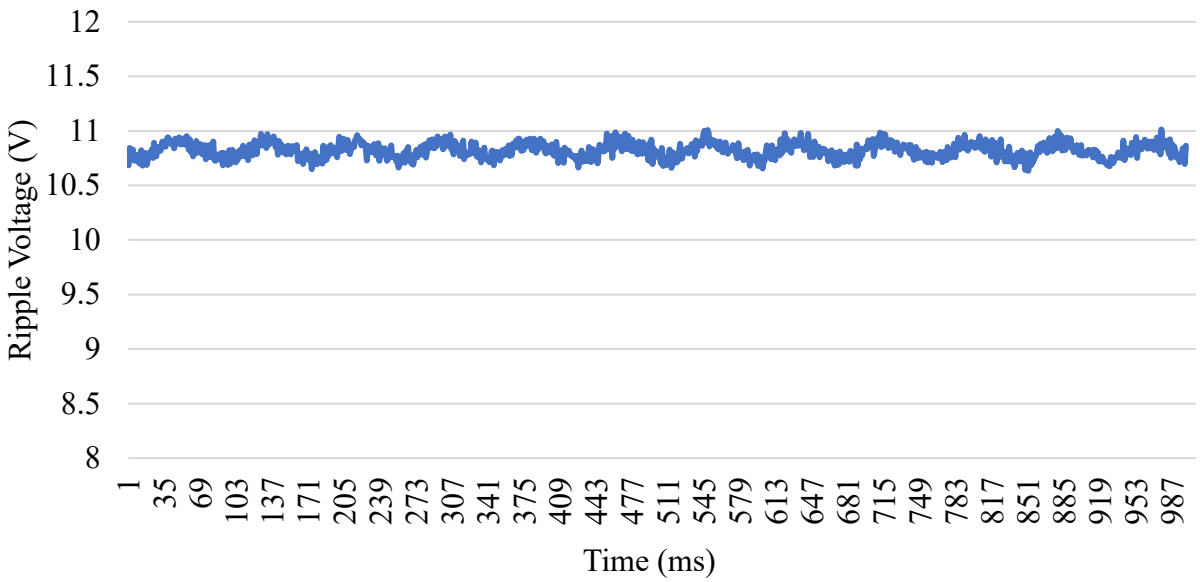

Figure 4: Voltage Across the Capacitor

Finally, the voltage across the load (R_l), was measured to determine if the circuit achieved the desired load voltage. During the lab, the circuit underperformed. The designed circuit was unable to achieve the load voltage with the values chosen. The resistance of R_1 was too large, not allowing for enough current to flow through the resistor to the voltage regulator. Due to this being a non-linear system due to the loading effect, an iterative process was necessary to determine and optimal R_1 value; each time the output voltage and output current was determined to achieve the optimal result. A final $R_l = 5.6201 \pm 0.0007\Omega$ with a nominal 5.6Ω resistance resulted in the 8.991V in Figure 5. Even with the lowering of the resistance to a smaller resistor, it was not enough to achieve the specified output voltage. This could be due to the internal resistance of the transformer, which was not accounted for.

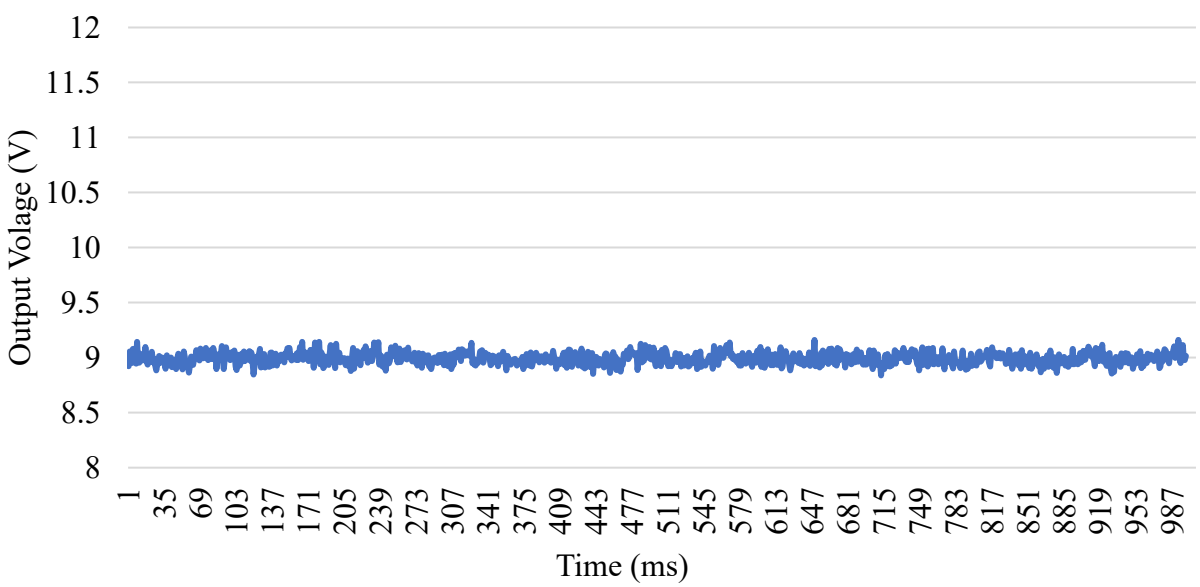

Figure 5: Voltage Over the Load

As seen in Figure 5, the ripple stays below 1V and provides a stable DC voltage, much less than 1V. However, with a V_L of 8.991 ± 0.010V falls short of achieving the 9.1V output, despite iterating through different R_1 resistances multiple times to try and achieve this. A R_1 = 5.6201 ± 0.0007Ω resulted in the output voltage 8.991V shown in Figure 5. This resistance is well outside of the range for the design, which was calculated to be 81Ω to 289Ω. This range did not account for the internal resistance of the transformer, which could contribute to the error in the calculation of the range of R_1. The final nominal and measured circuit components are listed in Table 1. This discrepancy could be due to the unideal internal resistance of the transformer, meaning the range is too high to achieve the 9.1V output. Using the 8.991V shown in Figure 5, the three different load resistances were implemented to achieve the 50%, 100%, and 110% load current. The measured values are compared to the expected in Table 2. [4]

Table 2: Nominal vs. Measured Load Values

Load		R_L (Ω)	V_L (V)	I_L (mA)
50%	Nominal	728	9.1	12.5
	Measured	728.90 ± 0.08	9.185 ± 0.004	12.601 ± 0.006
100%	Nominal	364	9.1	25
	Measured	363.632 ± 0.009	8.9900 ± 0.0019	24.723 ± 0.005
110%	Nominal	330	9.1	27.5
	Measured	330.011 ± 0.006	330.011 ± 0.006	27.16 ± 0.04

The percent regulation of the designed power supply was calculated to analyze the voltage stability under varying load conditions using (1):

$$\boldsymbol{Percent\ Load\ Regulation} = \frac{\boldsymbol{V_{L_{max}} - V_{L_{min}}}}{\boldsymbol{V_{L_{nom}}}}(\mathbf{100\%}) \tag{1}$$

The experimental power supply's percent regulation is 2.4 ± 0.2% which shows low sensitivity across the 1N4739 Zener diode, meaning that even with small variations in the Zener diode's characteristics, the performance is not highly effected, indicating moderate stability; however, the experiment was not able to achieve the nominal load voltage at 100% current.

The desired load voltage and current was not fully achieved for any of the three loads. The closest was the 50% current case. The results from the post-lab experiment revealed that the designed power supply circuit underperformed, as the nominal load voltage of 9.1V was not achieved. The actual measured load voltage was 8.991V, which was 1.009V below the specified 9.1V output despite adjusting the resistance of R_1 multiple times. The closest was the 50% current case, which resulted in a load voltage of 9.185V and a current of 12.6mA.

Some reasons for the lack of success of the experiment could be contributed to the loading effect, causing a non-linear system, as well as the internal resistance of the transformer or other circuit elements not accounted for during the design phase. The 50% case might have been the best result because it requires less input current, allowing for a more accurate result. Accounting for the internal resistance of the transformer might have provided better results.

References:

[1] L. Huang, "Power Supply Design", EECE 3100, Loyola Marymount University, Date Accessed: Oct. 14, 2024

[2] Dr. Victor Lin, Diodes and Their Applications, EECE 3100, Loyola Marymount University, Part 1 - Diodes and their applications (Revised) - Fall 2024 Electronics (EECE-3130-01) (lmu.edu), Date Accessed: Oct. 14, 2024

[3] V. Rrm and V. Rwm, "MAXIMUM RATINGS Rating Symbol 1N4001 1N4002 1N4003 1N4004 1N4005 1N4006 1N4007 Unit †Peak Repetitive Reverse Voltage Working Peak Reverse Voltage DC Blocking Voltage," 2005. https://cdn-shop.adafruit.com/datasheets/1N4001-D.PDF, Date accessed Oct. 14, 2024

[4] www.alldatasheet.com, "1N4739 datasheet(2/3 Pages) GE," Alldatasheet.com, 2024. https://www.alldatasheet.com/html-pdf/61857/GE/1N4739/45/2/1N4739.html, Date accessed Oct. 14, 2024

[5] L. Huang, Error Analysis of Oscilloscope Measurements, Loyola Marymount University, Date Accessed: Oct. 14, 2024

Attachments:

1. Oscilloscope Error Analysis

Oscilloscope Error Analysis

The random error is given by the oscilloscope datasheet, selecting the 1GHz model, 350 MHz, 5V/div, and 1 MΩ:

$$\boldsymbol{\delta_{ran} = \pm 0.0106\mathrm{V}} \tag{2}$$

The system error in mean DC voltage readings of the oscilloscope is found by (3) An example calculation for the ripple voltage is shown. [5]:

$$\begin{aligned}\boldsymbol{\delta_{sys\,V_{p-p}}} &= \boldsymbol{\pm(\text{DC Gain Accuracy} * |\text{reading}| + 0.05 * \text{div})} = \\ &= \boldsymbol{\pm(1\% * 0.3226 + 0.1 * 5) = \pm 0.0532\mathrm{V} \approx \pm 0.05\mathrm{V}}\end{aligned} \tag{3}$$

The total error is the geometric sum of the system error and the random error, shown in (4):

$$\boldsymbol{\delta_{V_{p-p}} = \pm\sqrt{\delta_{sys\,V_{p-p}}{}^2 + \delta_{ran}{}^2} = 0.0542V \approx \pm 0.05\mathrm{V}} \tag{4}$$