| ITEM NO. | PART | LENGTH (INCHES) | QTY. |
|---|---|---|---|
| 1 | 1x1x0.125" Square Aluminum Tube | 3.75 | 8 |

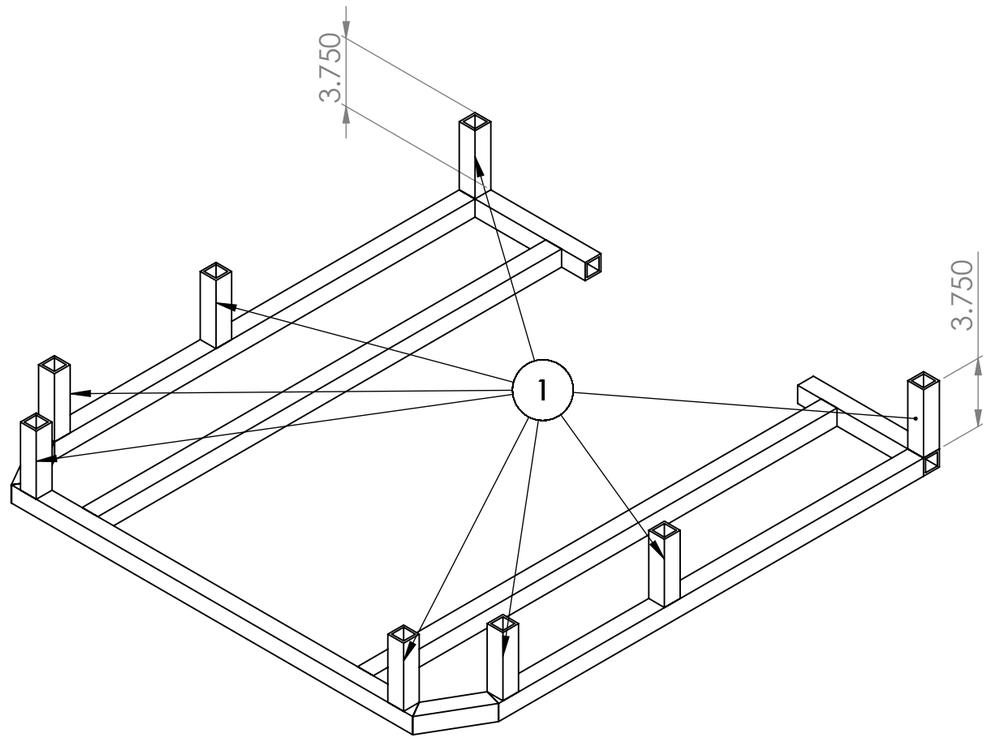


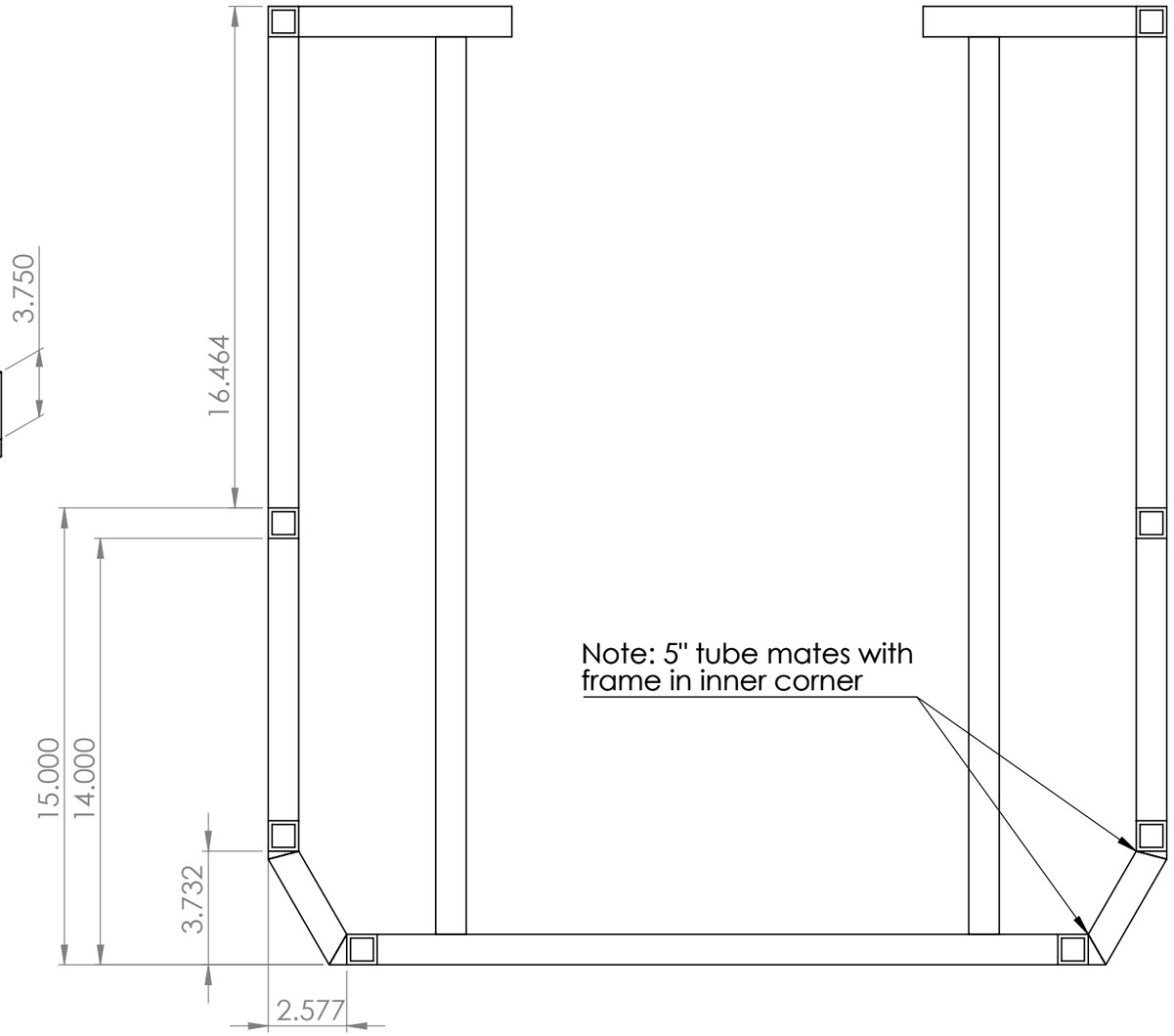


UNLESS OTHERWISE SPECIFIED:
DIMENSIONS ARE IN MILLIMETERS
SURFACE FINISH:
TOLERANCES:
LINEAR:
ANGULAR:

FINISH:

DEBURR AND BREAK SHARP EDGES

DO NOT SCALE DRAWING

REVISION

| | NAME | SIGNATURE | DATE |
|---|---|---|---|
| DRAWN | | | |
| CHK'D | | | |
| APPV'D | | | |
| MFG | | | |
| Q.A | | | |

TITLE:

MATERIAL:

WEIGHT:

DWG NO. FrameMiddle

A3

SCALE:1:10

SHEET 1 OF 2

**SOLIDWORKS Student Edition.**
**For Academic Use Only.**

NOTE: Requires EIGHT aluminum tubes

**8x**

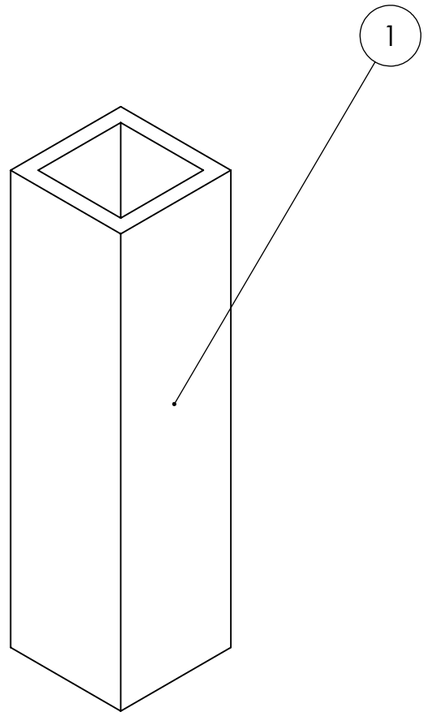


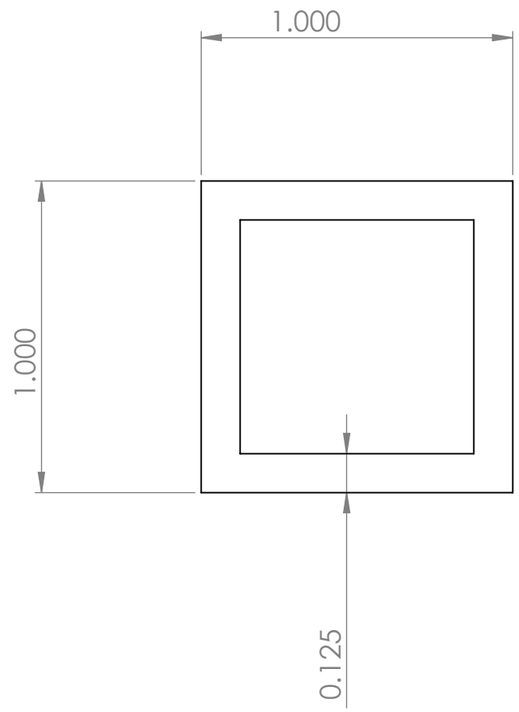


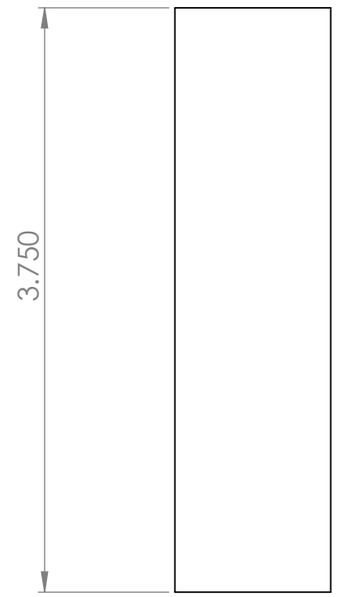


| | | | | | | |
|---|---|---|---|---|---|---|
| UNLESS OTHERWISE SPECIFIED:<br>DIMENSIONS ARE IN MILLIMETERS<br>SURFACE FINISH:<br>TOLERANCES:<br>LINEAR:<br>ANGULAR: | FINISH: | | | DEBURR AND BREAK SHARP EDGES | DO NOT SCALE DRAWING | REVISION |
| | NAME | SIGNATURE | DATE | | TITLE: | |
| DRAWN | | | | | | |
| CHK'D | | | | | | |
| APPV'D | | | | | | |
| MFG | | | | | | |
| Q.A | | | | MATERIAL: | DWG NO. FrameMiddle | A3 |
| | | | | WEIGHT: | SCALE:1:2 | SHEET 2 OF 2 |

**SOLIDWORKS Student Edition.**
**For Academic Use Only.**