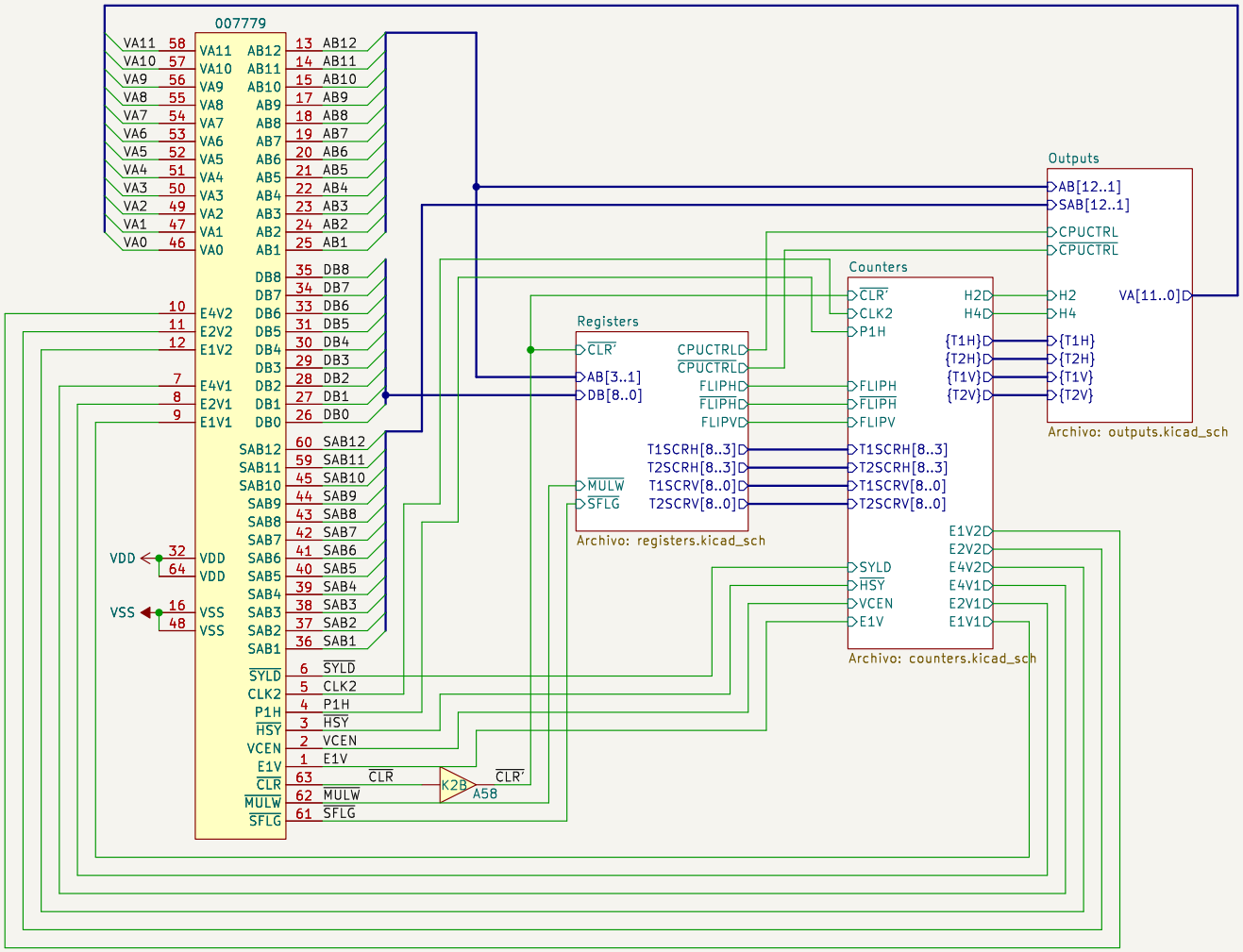

Ulf Skutnabba, twitter: @skutis77

Sheet: /
File: 007779.kicad_sch

Title: Konami 007779

Size: A4	Date: 2023-09-17	Rev:
KiCad E.D.A. kicad-cli 7.0.10-7.0.10~ubuntu20.04.1		Id: 1/4

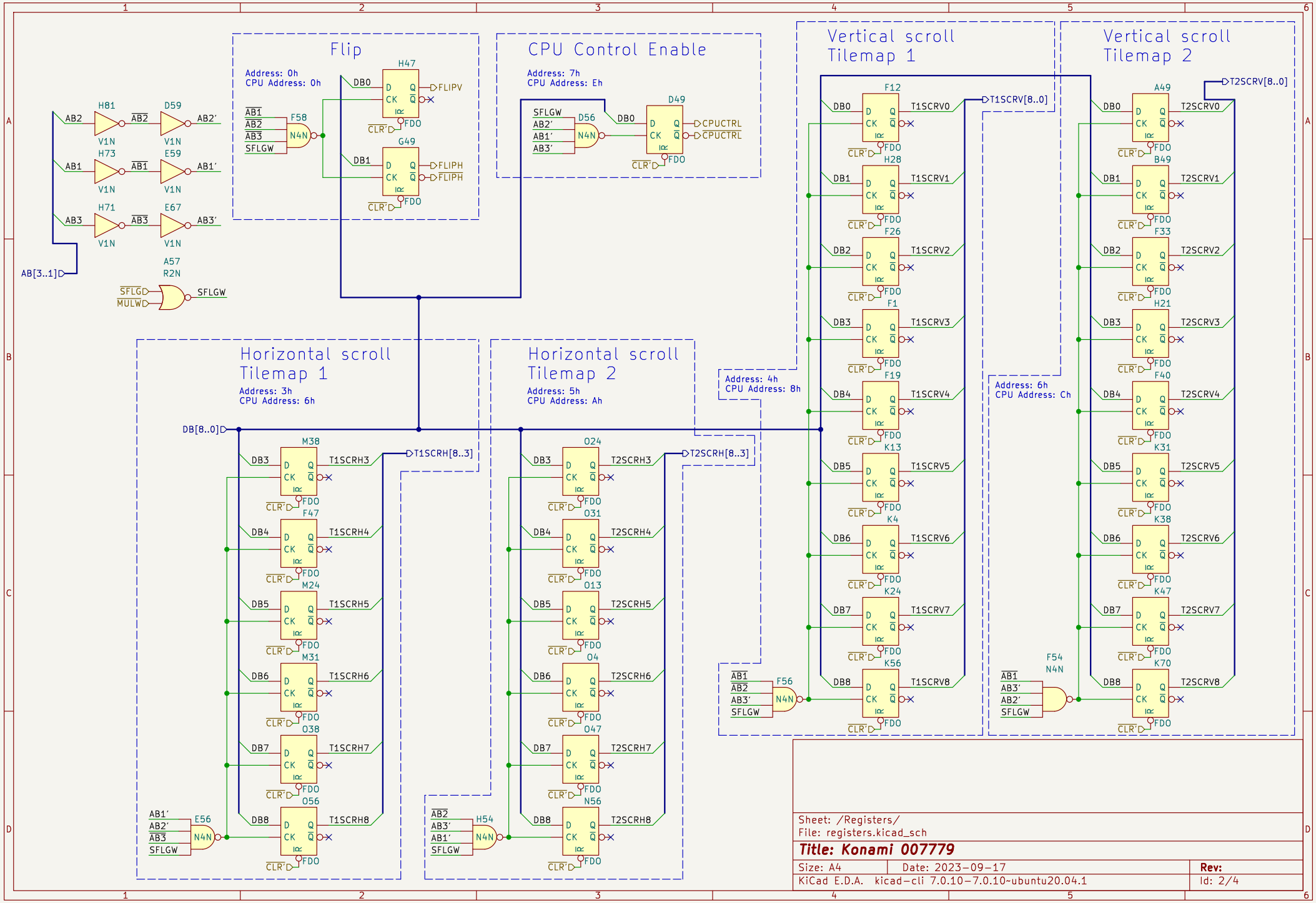
Flip
Address: 0h
CPU Address: 0h
CPU Control Enable
Address: 7h
CPU Address: Eh
Vertical scroll Tilemap 1
Vertical scroll Tilemap 2
Horizontal scroll Tilemap 1
Address: 3h
CPU Address: 6h
Horizontal scroll Tilemap 2
Address: 5h
CPU Address: Ah
Address: 4h
CPU Address: 8h
Address: 6h
CPU Address: Ch
AB[3..1]
DB[8..0]
T1SCRV[8..0]
T2SCRV[8..0]
T1SCRH[8..3]
T2SCRH[8..3]
FLIPV
FLIPH
CPUCTRL
SFLGW
Sheet: /Registers/
File: registers.kicad_sch
Title: Konami 007779
Size: A4
Date: 2023-09-17
Rev:
KiCad E.D.A. kicad-cli 7.0.10-7.0.10~ubuntu20.04.1
Id: 2/4

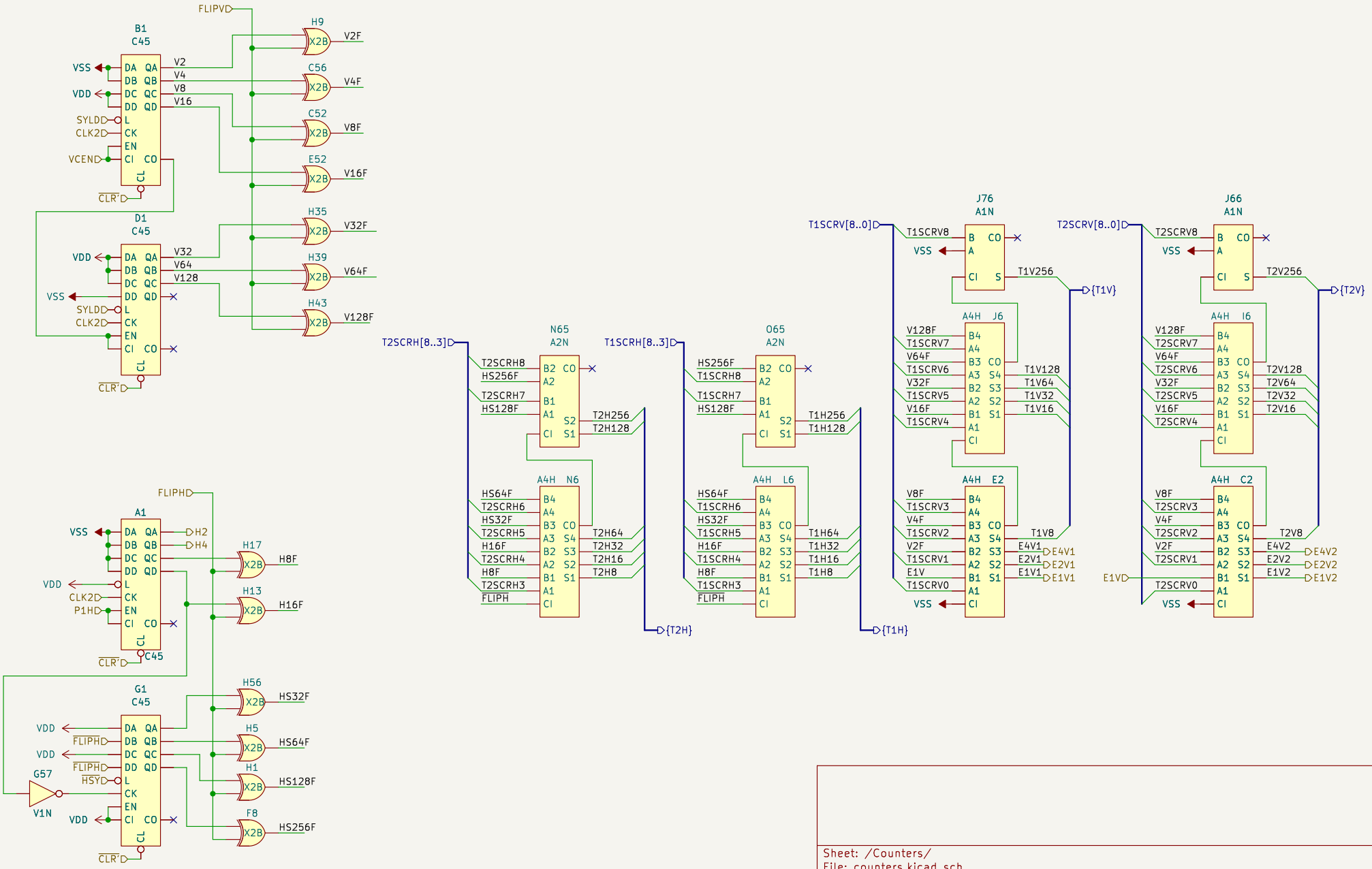

Sheet: /Counters/
File: counters.kicad_sch

Title: Konami 007779

Size: A4	Date: 2023-09-17	Rev:
KiCad E.D.A. kicad-cli 7.0.10-7.0.10~ubuntu20.04.1		Id: 3/4

The SCPU must ask the MCPU for control of the address outputs.
Through shared RAM?

The condition for MCPU writes to RAM are:

AB12 & $\overline{AB11}$ = VA11 & $\overline{VA10}$

SCPU can write anywhere if MCPU enables CPU control.

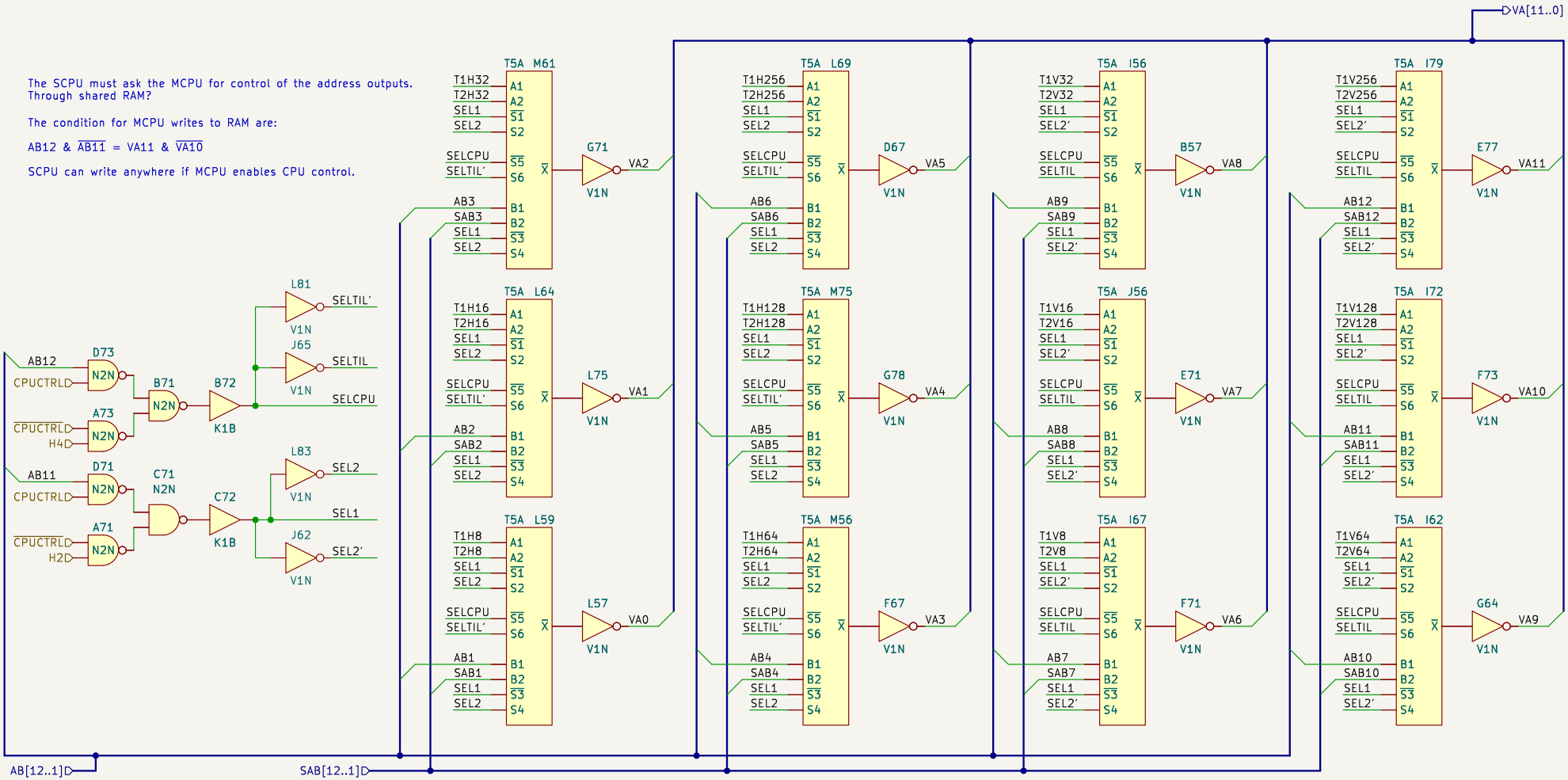

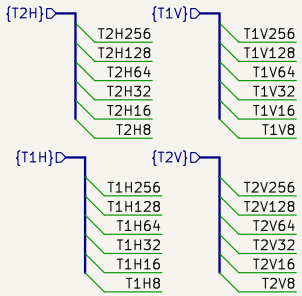

SELCPU	SELTIL	SEL2	SEL1	X	VAX	Output control
H	L	H	L	$\overline{ABX}$	ABX	MCPU
H	L	L	H	$\overline{SABX}$	SABX	SCPU
L	H	H	L	$\overline{T2HX}$	T2HX	Tilemap 2
L	H	L	H	$\overline{T1HX}$	T1HX	Tilemap 1

Sheet: /Outputs/
File: outputs.kicad_sch

Title: Konami 007779

Size: A4	Date: 2023-09-17	Rev:
KiCad E.D.A. kicad-cli 7.0.10-7.0.10~ubuntu20.04.1		Id: 4/4