1. OBFI: (OBJBUFINIT) zeros are written to 1800h..1AFFh.
2. DMA: OA[12:0] active.
   a) 8 words are read from addresses 0000h..0007h, 0028h..002Fh,...,17E0h..17E7h
      by the sprite data parser 007784 and if the sprite is enabled with BEFLAG
      they are written to the buffer OBJBUF.

OBJRAM
0000h..17E7h Unprocessed data
1800h..1BFFh Processed data

WD0	WD1	WD2	WD3	WD4	WD5	WD6	WD7	WD0	WD1	WD2	WD3
0000	0001	0002	0003	0004	0005	0006	0007	BA1	BA2	BA3	BA4

OBJBUF, Buffer Address
BA1 : OA[12:0] = 1800h + OD''[7:0] << 2
BA2 : OA[12:0] = BA1 + 1
BA3 : OA[12:0] = BA1 + 2
BA4 : OA[12:0] = BA1 + 3

OBFI	H8	OA	OAOE	
1	X	{3'b110,OWRA[9:0]}	1	Writes to 1800h..1BFFh, reset object buffer
0	0	ORDA[12:0]	0	Read data from object RAM.
0	1	{3'b110,OD''[7:0],OWRA[2:1]}	1	Writes to 1800h..1BFFh

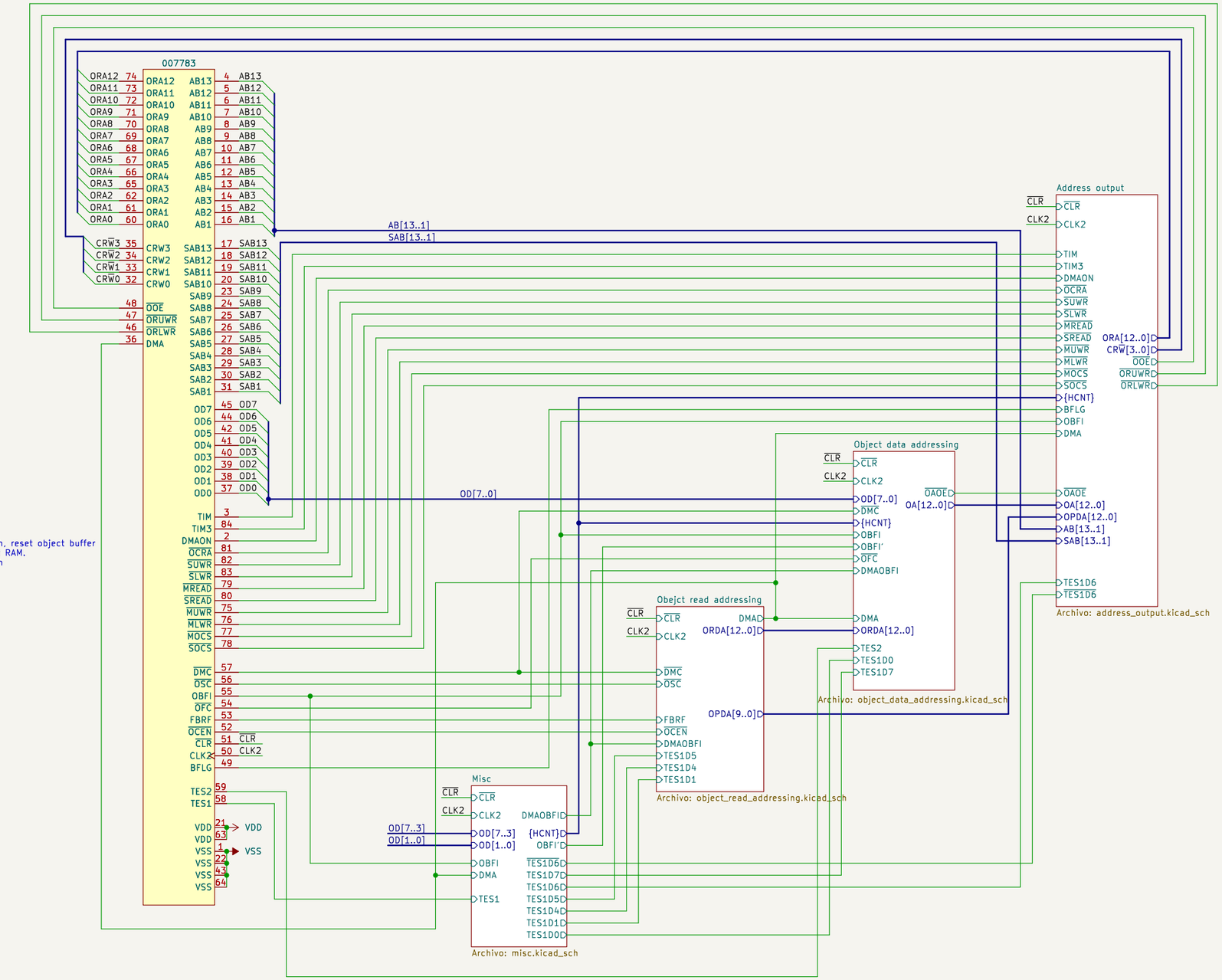

Ulf Skutnabba, twitter: @skutis77

Sheet: /		
File: 007783.kicad_sch		
Title: Konami 007783		
Size: A3	Date: 2023-10-10	**Rev:**
KiCad E.D.A. kicad-cli 7.0.10-7.0.10~ubuntu20.04.1		Id: 1/5

Object Buffer Write Address

OBFI = 1–> H8OBFI = 1, $\overline{H8OBFI}$ = 0, $\overline{OAOE}$ = 1, Only writes.
OBFI = 0 –> H8OBFI = H8, $\overline{H8OBFI}$ = H8, $\overline{OAOE}$ = H8

Sheet: /Object data addressing/		
File: object_data_addressing.kicad_sch		
Title: Konami 007783		
Size: A3	Date: 2023-10-10	**Rev:**
KiCad E.D.A. kicad-cli 7.0.10-7.0.10-ubuntu20.04.1		Id: 2/5

Object Read Addressing

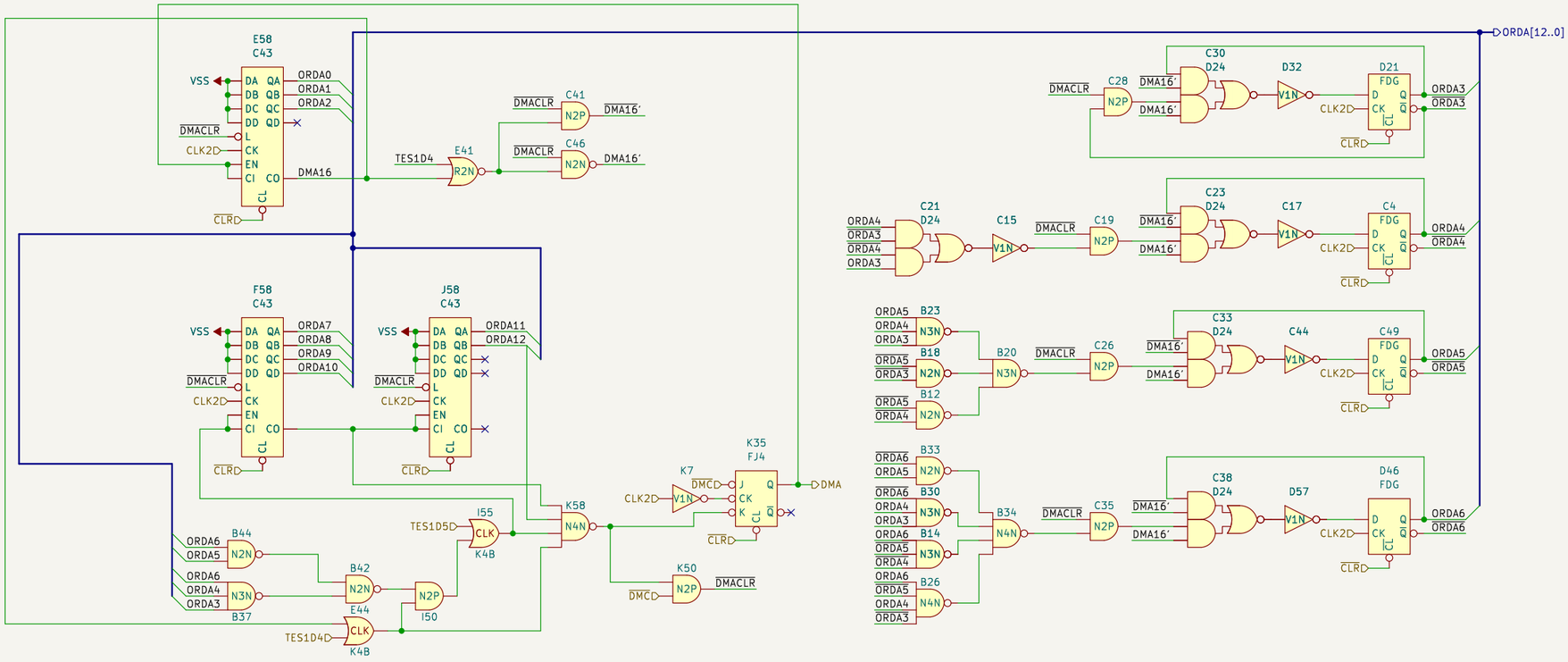

Parsed Object Data Addressing

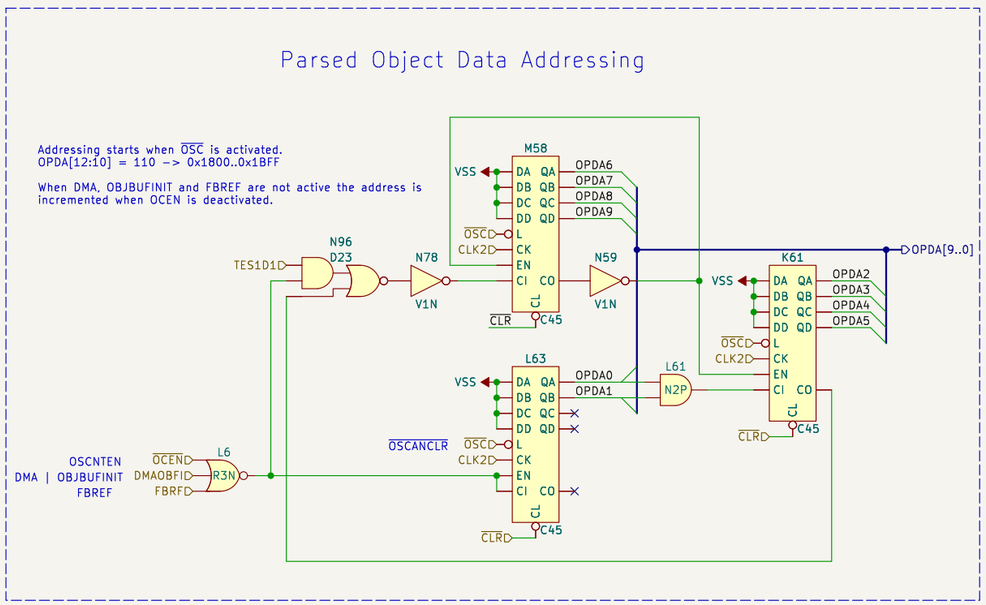

Sheet: /Obejct read addressing/		
File: object_read_addressing.kicad_sch		
Title: Konami 007783		
Size: A3	Date: 2023-10-10	**Rev:**
KiCad E.D.A. kicad-cli 7.0.10-7.0.10~ubuntu20.04.1		Id: 3/5

Test register 1

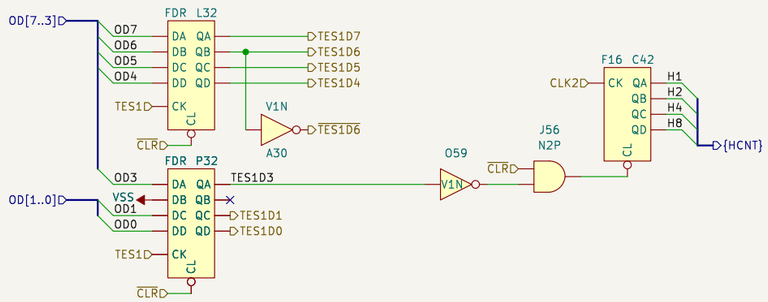

Sheet: /Misc/		
File: misc.kicad_sch		
Title: Konami 007783		
Size: A3	Date: 2023-10-10	**Rev:**
KiCad E.D.A. kicad-cli 7.0.10-7.0.10~ubuntu20.04.1		Id: 5/5

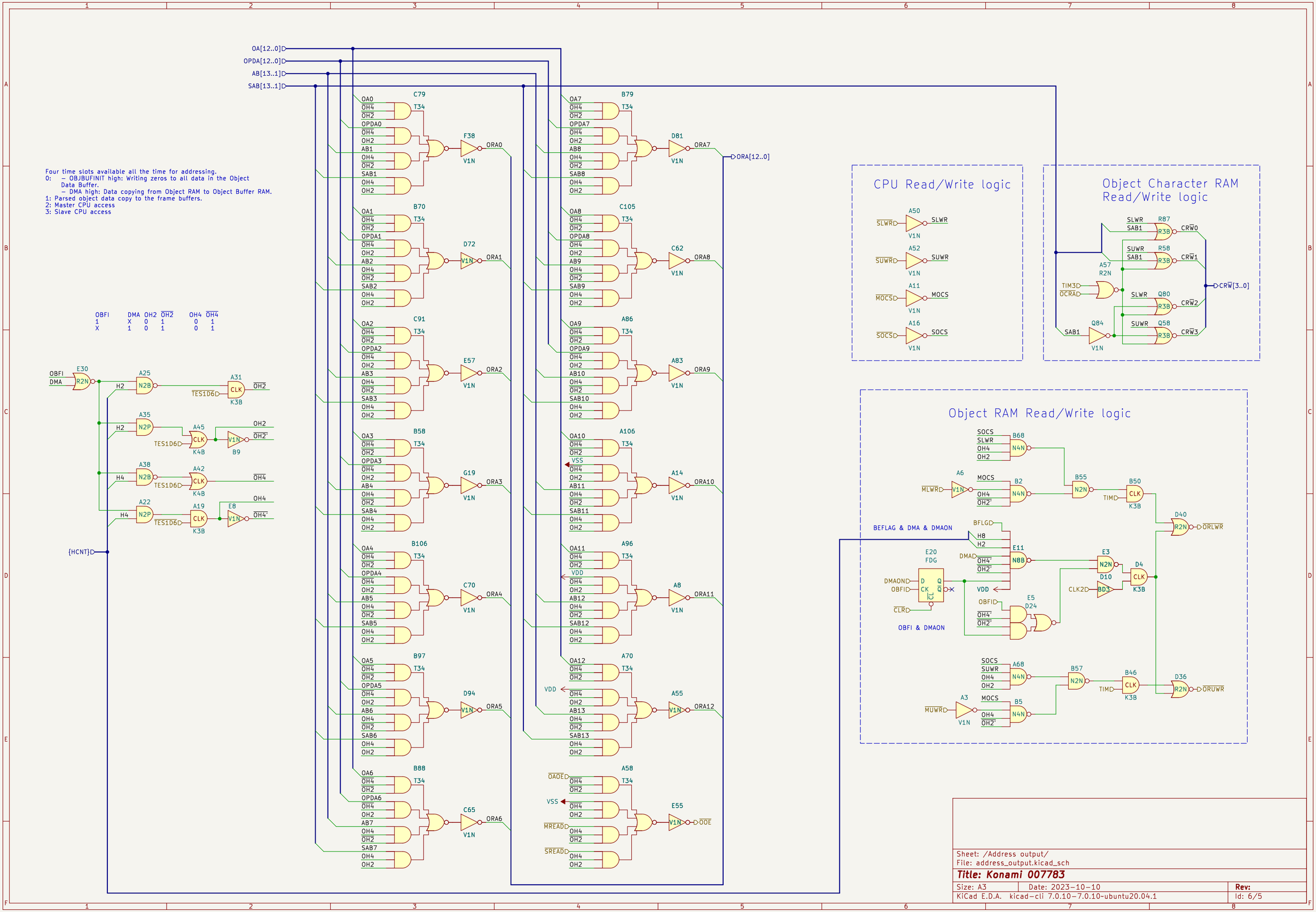

Four time slots available all the time for addressing.
0: – OBJBUFINIT high: Writing zeros to all data in the Object Data Buffer.
– DMA high: Data copying from Object RAM to Object Buffer RAM.
1: Parsed object data copy to the frame buffers.
2: Master CPU access
3: Slave CPU access
OBFI DMA OH2 OH2 OH4 OH4
1 X 0 1 0 1
X 1 0 1 0 1
OA[12..0]
OPDA[12..0]
AB[13..1]
SAB[13..1]
ORA[12..0]
{HCNT}
CPU Read/Write logic
Object Character RAM Read/Write logic
Object RAM Read/Write logic
BEFLAG & DMA & DMAON
OBFI & DMAON
CRW[3..0]
Sheet: /Address output/
File: address_output.kicad_sch
Title: Konami 007783
Size: A3
Date: 2023-10-10
Rev:
KiCad E.D.A. kicad-cli 7.0.10-7.0.10~ubuntu20.04.1
Id: 6/5