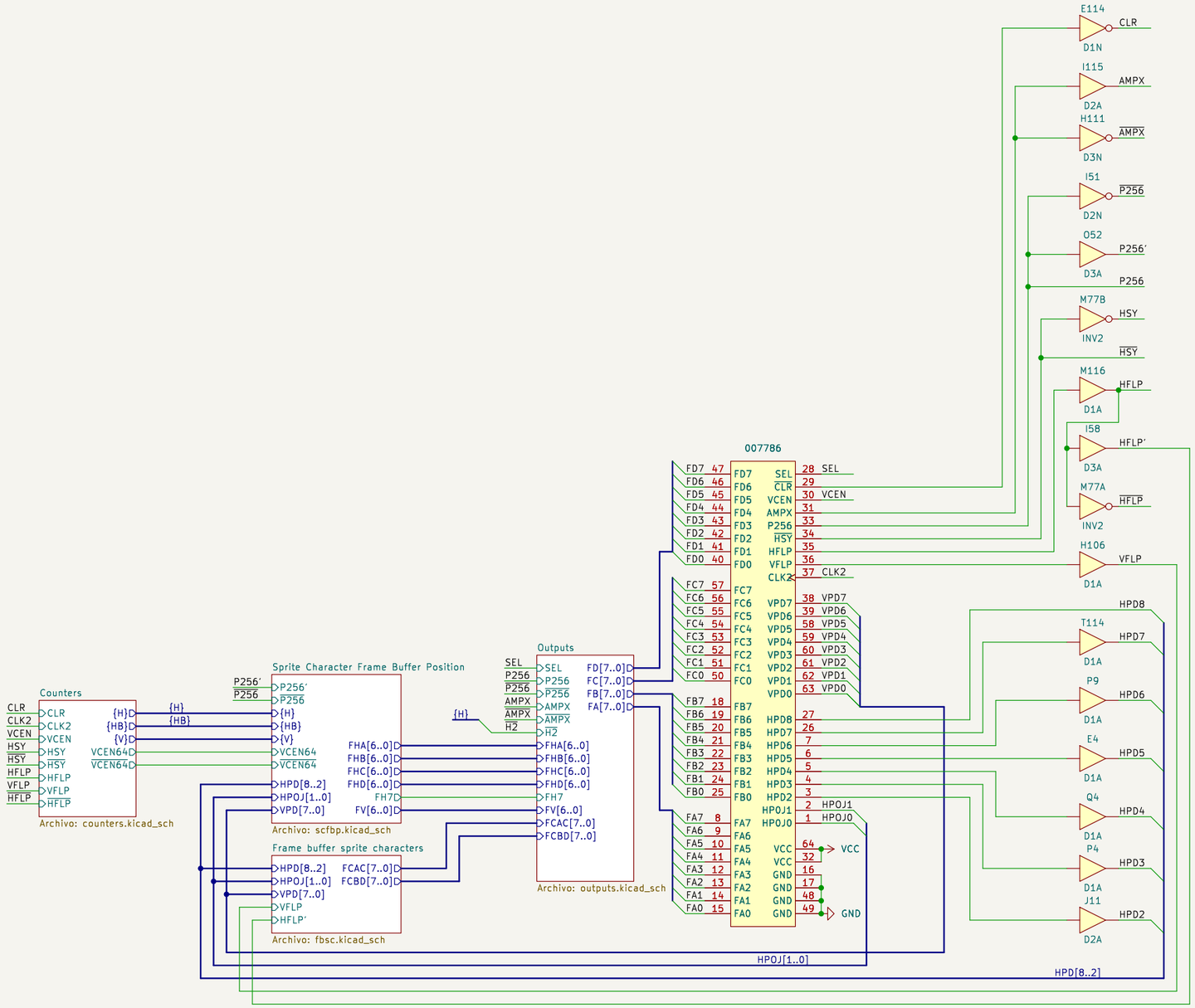

The 007786 is a sprite frame buffer controller.
It works in two modes:
- When SEL = 0, it generates addresses for the frame buffer.
- When SEL = 1, it parses sprite character data
It also handles refreshing of data in the DRAM memory.

The 007786 uses an OKI 74V000 CMOS gate array
with 2400 unit cells.

Ulf Skutnabba, twitter: @skutis77

Sheet: /
File: 007786.kicad_sch

Title: Konami 007786

Size: A3	Date: 2024-01-28	Rev:
KiCad E.D.A. kicad-cli 7.0.10-7.0.10~ubuntu20.04.1		Id: 1/5

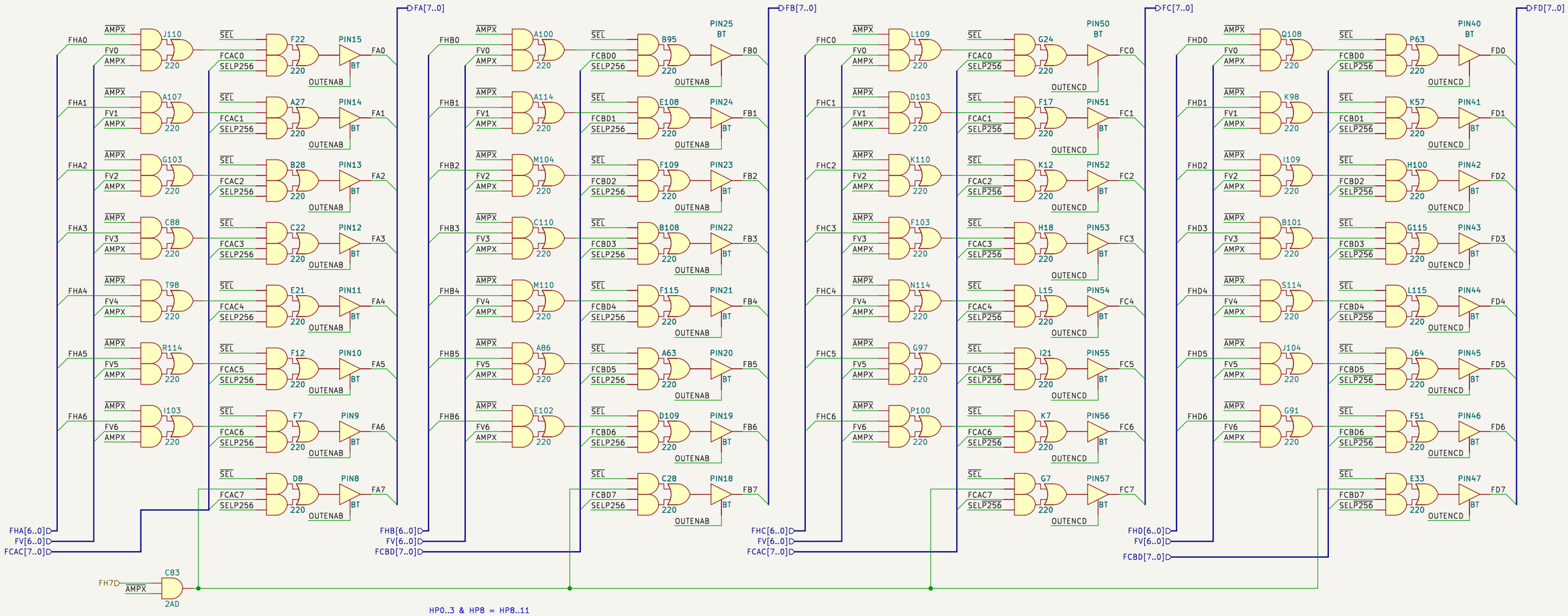

Output buffer enable

Addressing mode, SEL = 0

Outputs are enabled all the time when the 007786 is used for addressing sprite characters in the frame buffer, SEL = 0.

Sprite character mode, SEL = 1

When used for writing sprite characters to the frame buffer it is enabled when H2 = 1 or for FA and FB outputs when P256 = 1. The corresponding for C and D outputs is when P256 = 0.

A and B output
OUTENAB =
~SEL | ~H2 | ~P256 =
~SEL | H2 | P256

OUTENCD =
~SEL | ~H2 | ~P256 =
~SEL | H2 | P256

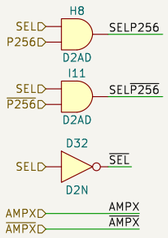

AMPX and AMPX selects between Row and Columns in the frame buffer DRAM.

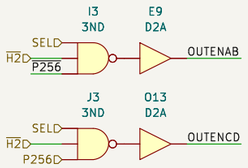

SCM, P256 = 1, AB out enabled.

Ulf Skutnabba, twitter: @skutis77

Sheet: /Outputs/
File: outputs.kicad_sch

Title: Konami 007786

Size: A3	Date: 2024-01-28	Rev:
KiCad E.D.A. kicad-cli 7.0.10-7.0.10~ubuntu20.04.1		Id: 2/5

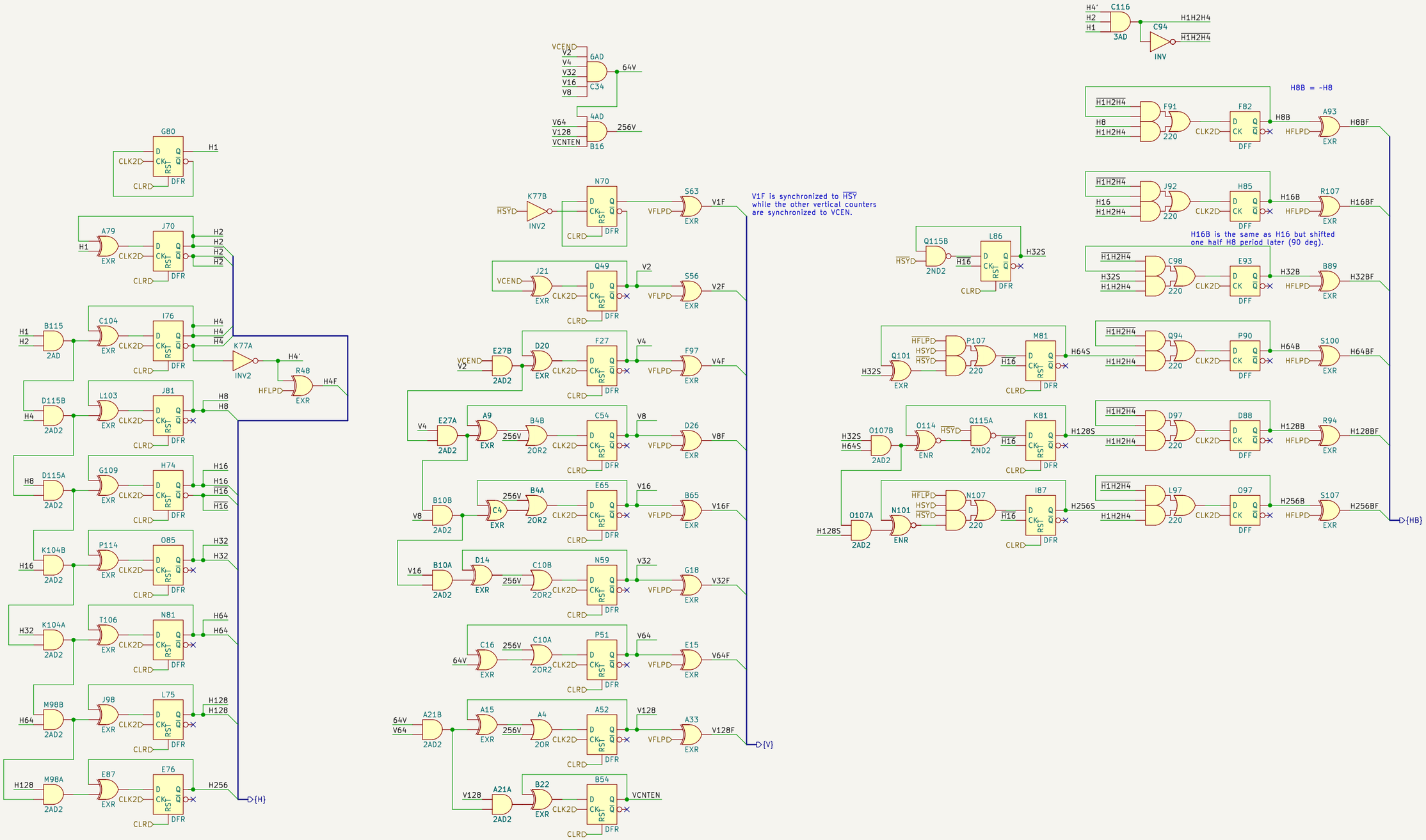

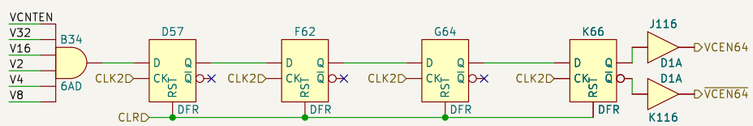

Ulf Skutnabba, twitter: @skutis77

Sheet: /Counters/

File: counters.kicad_sch

Title: Konami 007786

Size: A3	Date: 2024-01-28	Rev:
KiCad E.D.A. kicad-cli 7.0.10-7.0.10~ubuntu20.04.1		Id: 3/5

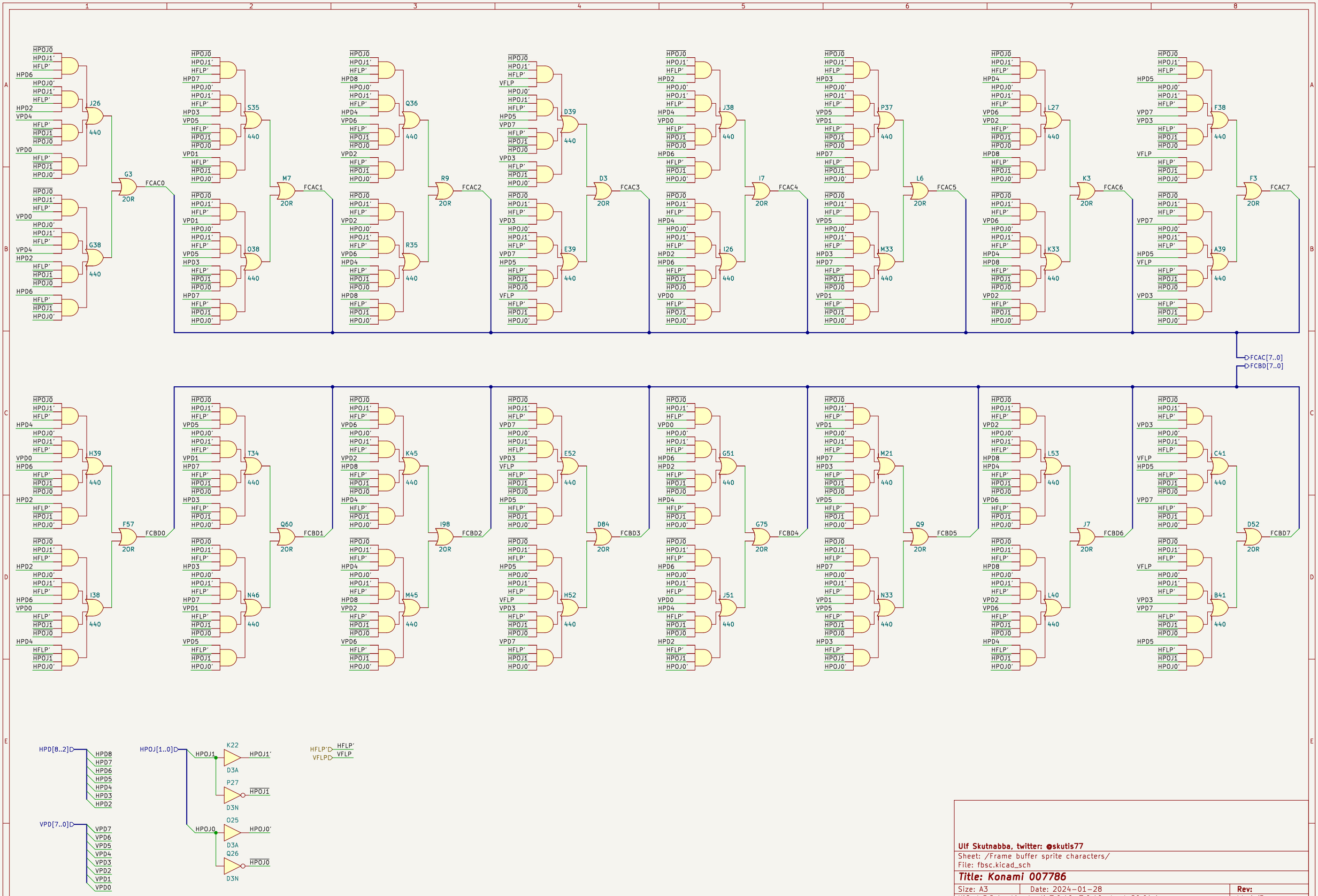

Ulf Skutnabba, twitter: @skutis77

Sheet: /Frame buffer sprite characters/

File: fbsc.kicad_sch

Title: Konami 007786

Size: A3	Date: 2024-01-28	Rev:
KiCad E.D.A. kicad-cli 7.0.10-7.0.10~ubuntu20.04.1		Id: 4/5

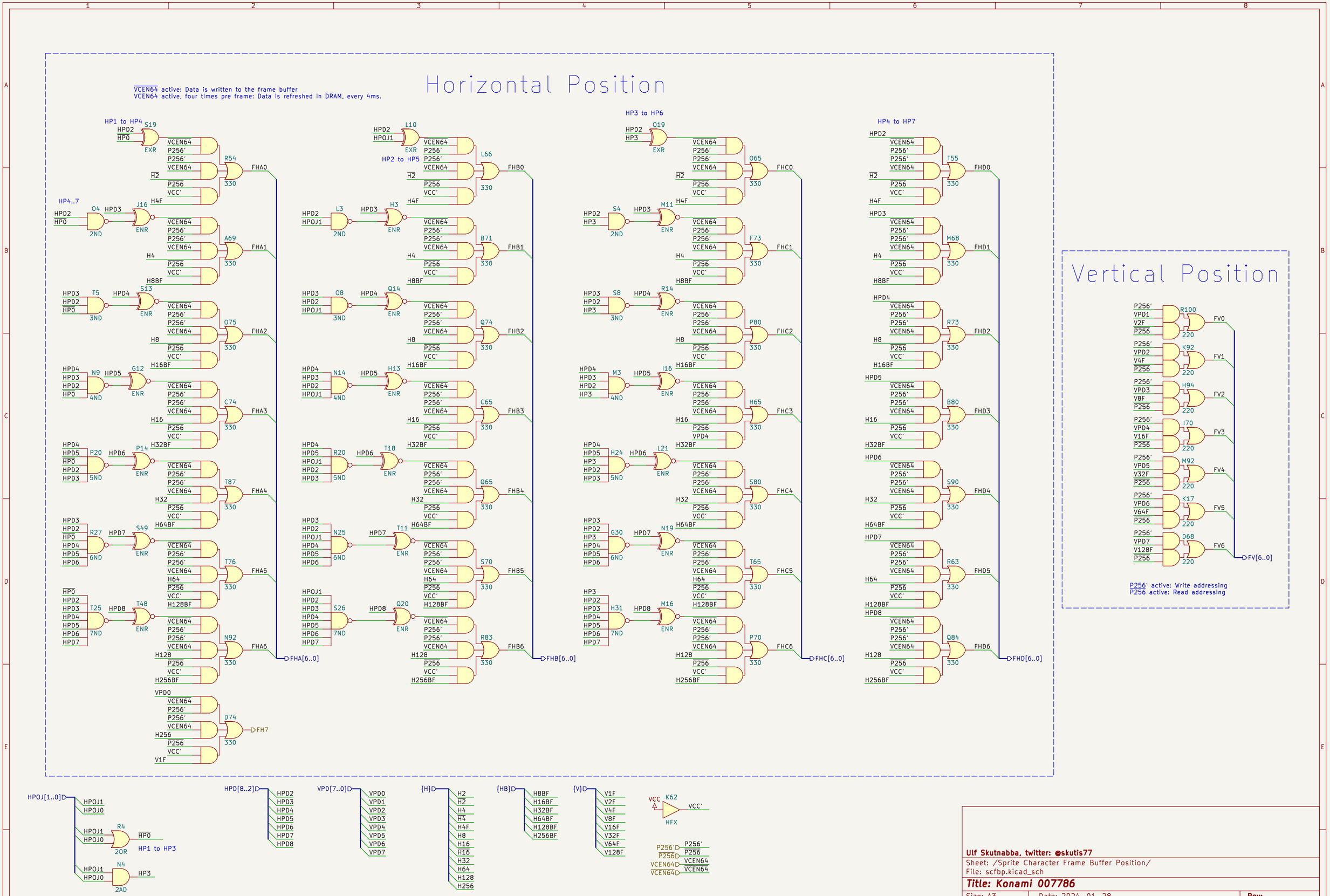

Ulf Skutnabba, twitter: @skutis77

Sheet: /Sprite Character Frame Buffer Position/

File: scfbp.kicad_sch

Title: Konami 007786

Size: A3	Date: 2024-01-28	Rev:
KiCad E.D.A. kicad-cli 7.0.10-7.0.10~ubuntu20.04.1		Id: 5/5