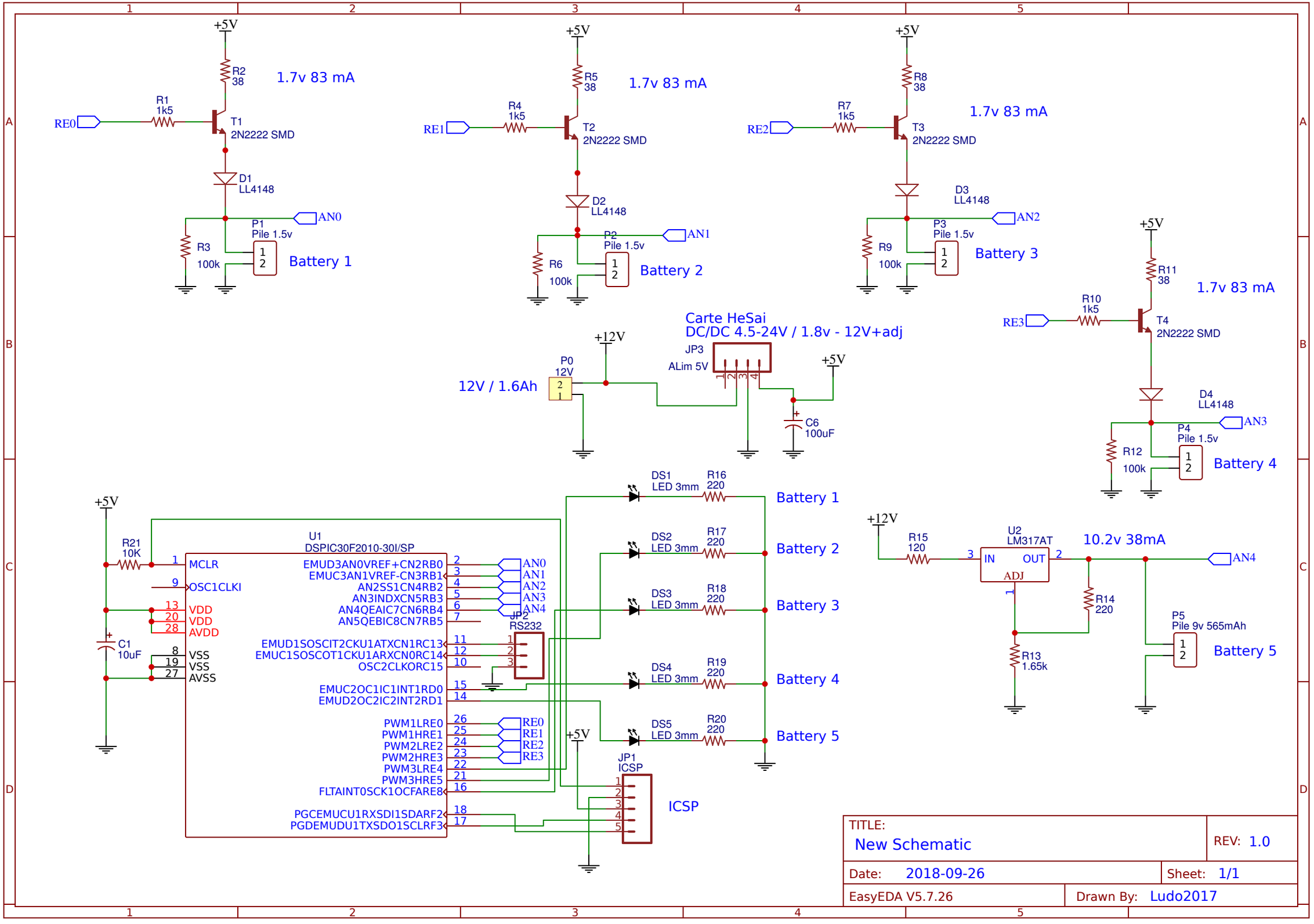
+5V
R2
38
1.7v 83 mA
R1
1k5
RE0
T1
2N2222 SMD
D1
LL4148
AN0
P1
Pile 1.5v
R3
100k
Battery 1
R5
38
1.7v 83 mA
R4
1k5
RE1
T2
2N2222 SMD
D2
LL4148
AN1
P2
Pile 1.5v
R6
100k
Battery 2
R8
38
1.7v 83 mA
R7
1k5
RE2
T3
2N2222 SMD
D3
LL4148
AN2
P3
Pile 1.5v
R9
100k
Battery 3
R11
38
1.7v 83 mA
R10
1k5
RE3
T4
2N2222 SMD
D4
LL4148
AN3
P4
Pile 1.5v
R12
100k
Battery 4
Carte HeSai
DC/DC 4.5-24V / 1.8v - 12V+adj
+12V
P0
12V
12V / 1.6Ah
JP3
ALim 5V
C6
100uF
R21
10K
C1
10uF
U1
DSPIC30F2010-30I/SP
MCLR
OSC1CLKI
VDD
VDD
AVDD
VSS
VSS
AVSS
EMUD3AN0VREF+CN2RB0
EMUC3AN1VREF-CN3RB1
AN2SS1CN4RB2
AN3INDXCN5RB3
AN4QEAIC7CN6RB4
AN5QEBIC8CN7RB5
EMUD1SOSCIT2CKU1ATXCN1RC13
EMUC1SOSCOT1CKU1ARXCN0RC14
OSC2CLKORC15
EMUC2OC1IC1INT1RD0
EMUD2OC2IC2INT2RD1
PWM1LRE0
PWM1HRE1
PWM2LRE2
PWM2HRE3
PWM3LRE4
PWM3HRE5
FLTAINT0SCK1OCFARE8
PGCEMUCU1RXSDI1SDARF2
PGDEMUDU1TXSDO1SCLRF3
JP2
RS232
JP1
ICSP
ICSP
DS1
LED 3mm
R16
220
Battery 1
DS2
LED 3mm
R17
220
Battery 2
DS3
LED 3mm
R18
220
Battery 3
DS4
LED 3mm
R19
220
Battery 4
DS5
LED 3mm
R20
220
Battery 5
+12V
R15
120
U2
LM317AT
IN
OUT
ADJ
10.2v 38mA
AN4
R14
220
R13
1.65k
P5
Pile 9v 565mAh
Battery 5
TITLE:
New Schematic
REV: 1.0
Date: 2018-09-26
Sheet: 1/1
EasyEDA V5.7.26
Drawn By: Ludo2017