JVB Networking Labs

IPv6 Static Routing

Scenario

A company has a user network on the branch floor (SW1) and a server network in the data center (SW2), and both need to communicate through the internal routing infrastructure using IPv6. Under normal conditions, traffic is expected to follow the main path through R2, which acts as the central router connecting the two sides. There is also a direct link between R1 and R3, but it exists only as a backup and should not be used unless the primary path fails.

The network does not use dynamic routing, so everything must be handled with IPv6 static routes. Your task is to configure routing on R1, R2, and R3 so that communication between the two networks works reliably, traffic prefers the path through R2, and automatically switches to the R1–R3 link if the main path goes down.

Requirements

- Enable IPv6 routing on routers
- Manually configure IPv6 addresses for all connected router interfaces
- Configure IPv6 addresses on PCs
- Configure the necessary IPv6 static routes for inter-office communications
- Configure the backup link route accordingly, allowing for automatic switch-over if the main path fails

Post-Lab Testing

- Perform connectivity tests by pinging between PCs across switches
- Disable interfaces on primary route to test backup route switchover
- Run the appropriate ‘show’ commands to confirm configuration

Network Topology

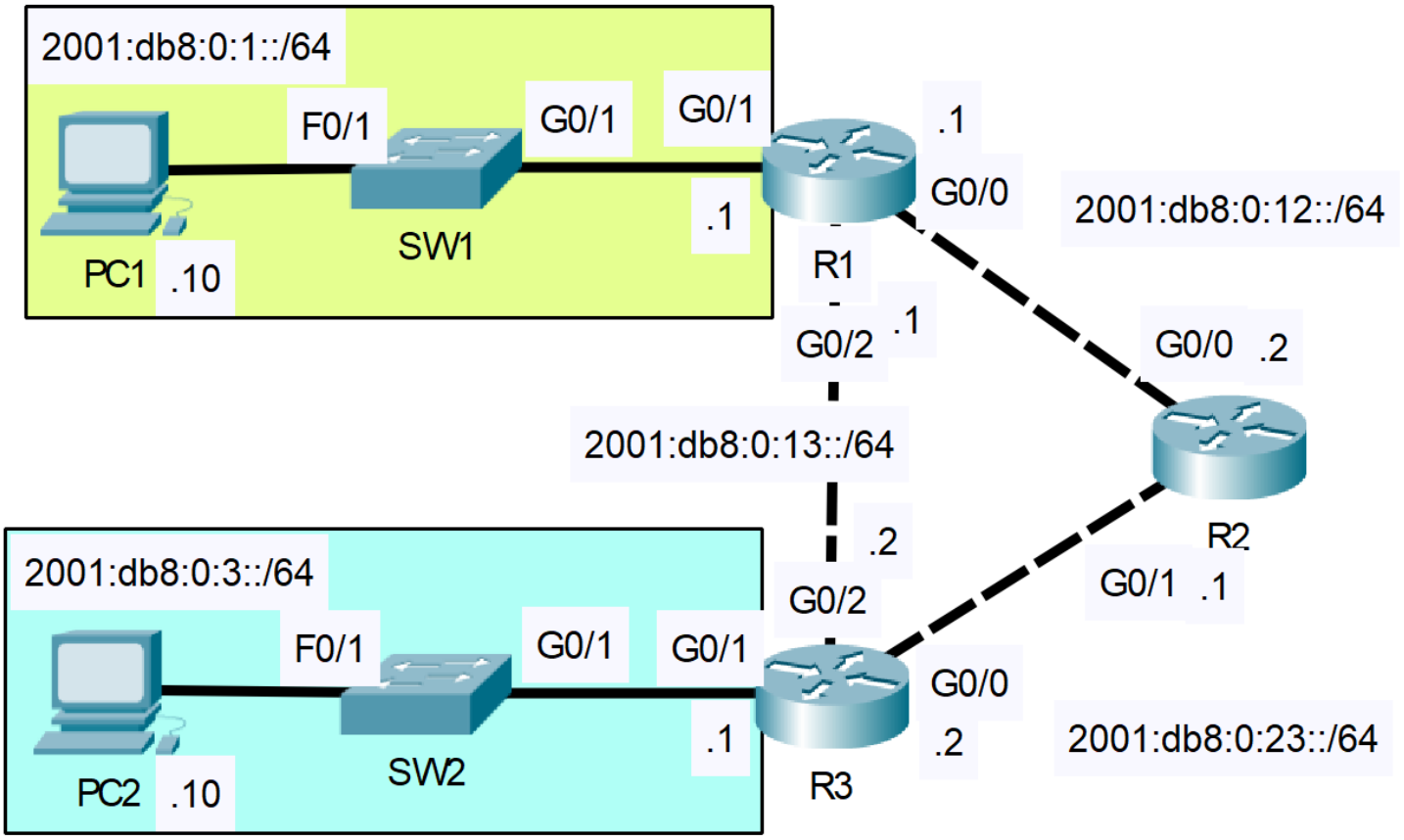

Devices – 3 Routers, 2 Switches, 2 PCs

Device	Interface	Connected To	Remote Interface	IPv6 Address
R1	G0/0	R2	G0/0	2001:db8:0:12::1/64
R1	G0/1	SW1	G0/1	2001:db8:0:1::1/64
R1	G0/2	R3	G0/2	2001:db8:0:13::1/64
R2	G0/0	R1	G0/0	2001:db8:0:12:2/64
R2	G0/1	R3	G0/0	2001:db8:0:23::1/64
R3	G0/0	R2	G0/1	2001:db8:0:23::2/64
R3	G0/1	SW2	G0/1	2001:db8:0:3::1/64
R3	G0/2	R1	G0/2	2001:db8:0:13::2/64
SW1	G0/1	R1	G0/1	N/A
SW1	F0/1	PC1	-	N/A
SW2	G0/1	R3	G0/1	N/A
SW2	F0/1	PC2	-	N/A

Device	Connected To	Remote Interface	IPv6 Address	Default-Gateway
PC1	SW1	F0/1	2001:db8:0:1::10/64	2001:db8:0:1::1/64
PC2	SW2	F0/1	2001:db8:0:3::10/64	2001:db8:0:3::1/64

Configuration Plan Explanation

The routing in this lab is set up so traffic between the two LANs normally goes through R2, which acts as the main path between the networks. On R1, a fully specified static route is used to reach the 2001:db8:0:3::/64 network by pointing to R2's IPv6 address. This makes sure traffic follows the intended path through the middle router. A second route to the same network is also configured on R1, but with a higher administrative distance and pointing directly to R3. This creates a floating static route that stays unused unless the primary path through R2 goes down.

R2 is to be configured using recursive routes (Next-Hop IPv6 address). On R3, the same idea from R1 is used for return traffic. There's a primary route back to the 2001:db8:0:1::/64 network through R2, along with a floating static route directly to R1 as a backup. This keeps traffic flowing normally through R2, but still allows it to reroute over the direct link if the main path fails.

R1

Destination Network	Next Hop Address	Exit Interface	Route Type	Administrative Distance
2001:db8:0:3::/64	2001:db8:0:12::2/64	G0/0	Primary	1
2001:db8:0:3::/64	2001:db8:0:13::2/64	G0/2	Floating	5

R2

Destination Network	Next Hop Address
2001:db8:0:1::/64	2001:db8:0:12::1/64
2001:db8:0:3::/64	2001:db8:0:23::2/64

R3

Destination Network	Next Hop Address	Exit Interface	Route Type	Administrative Distance
2001:db8:0:1::/64	2001:db8:0:23::1/64	G0/0	Primary	1
2001:db8:0:1::/64	2001:db8:0:13::1/64	G0/2	Floating	5

DON'T FORGET TO SAVE YOUR CONFIGURATIONS!

Configuration

R1
enable configure terminal ipv6 unicast-routing int g0/0 ipv6 address 2001:db8:0:12::1/64 no shutdown int g0/1 ipv6 address 2001:db8:0:1::1/64 no shutdown int g0/2 ipv6 address 2001:db8:0:13::1/64 no shutdown ipv6 route 2001:db8:0:3::/64 g0/0 2001:db8:0:12::2/64 ipv6 route 2001:db8:0:3::/64 g0/2 2001:db8:0:13::2/64 5 exit write

R2
enable configure terminal ipv6 unicast-routing int g0/0 ipv6 address 2001:db8:0:12::2/64 no shutdown int g0/1 ipv6 address 2001:db8:0:23::1/64 no shutdown ipv6 route 2001:db8:0:1::/64 2001:db8:0:12::1/64 ipv6 route 2001:db8:0:3::/64 2001:db8:0:23::2/64 exit write

R3
enable configure terminal ipv6 unicast-routing int g0/0 ipv6 address 2001:db8:0:23::2/64 no shutdown int g0/1 ipv6 address 2001:db8:0:3::1/64 no shutdown int g0/2 ipv6 address 2001:db8:0:13::2/64 no shutdown ipv6 route 2001:db8:0:1::/64 g0/0 2001:db8:0:23::1/64 ipv6 route 2001:db8:0:1::/64 g0/2 2001:db8:0:13::1/64 5 exit write

Verification Commands

Routers
show ipv6 interface brief show ipv6 route show running-config

- **To test PC connectivity, ping computers across networks. Use tracert to check path.**
- **To test if the backup route is correctly configured, manually disable G0/0 and G0/1 on R2, run the 'show ipv6 route' command on R1 and R3, and observe the routing changes:**

R2
interface range g0/0-1 shutdown

'Show IPv6 Route' Expected Output on R1:

Normal State

S 2001:DB8:0:3::/64 [1/0] via 2001:DB8:0:12::2, GigabitEthernet0/0

After Failover

S 2001:DB8:0:3::/64 [5/0] via 2001:DB8:0:13::2, GigabitEthernet0/2

'Show IPv6 Route' Expected Output on R3:

Normal State

S 2001:DB8:0:1::/64 [1/0] via 2001:DB8:0:23::1, GigabitEthernet0/0

After Failover

S 2001:DB8:0:1::/64 [5/0] via 2001:DB8:0:13::1, GigabitEthernet0/2

This lab was created by James VanBuren
J.VanBurenIV@outlook.com
Cisco Certified Network Associate

More labs at
https://github.com/JVanBurenIV/JVB-CCNA-Networking-Labs
http://linkedin.com/in/j-vanbureniv