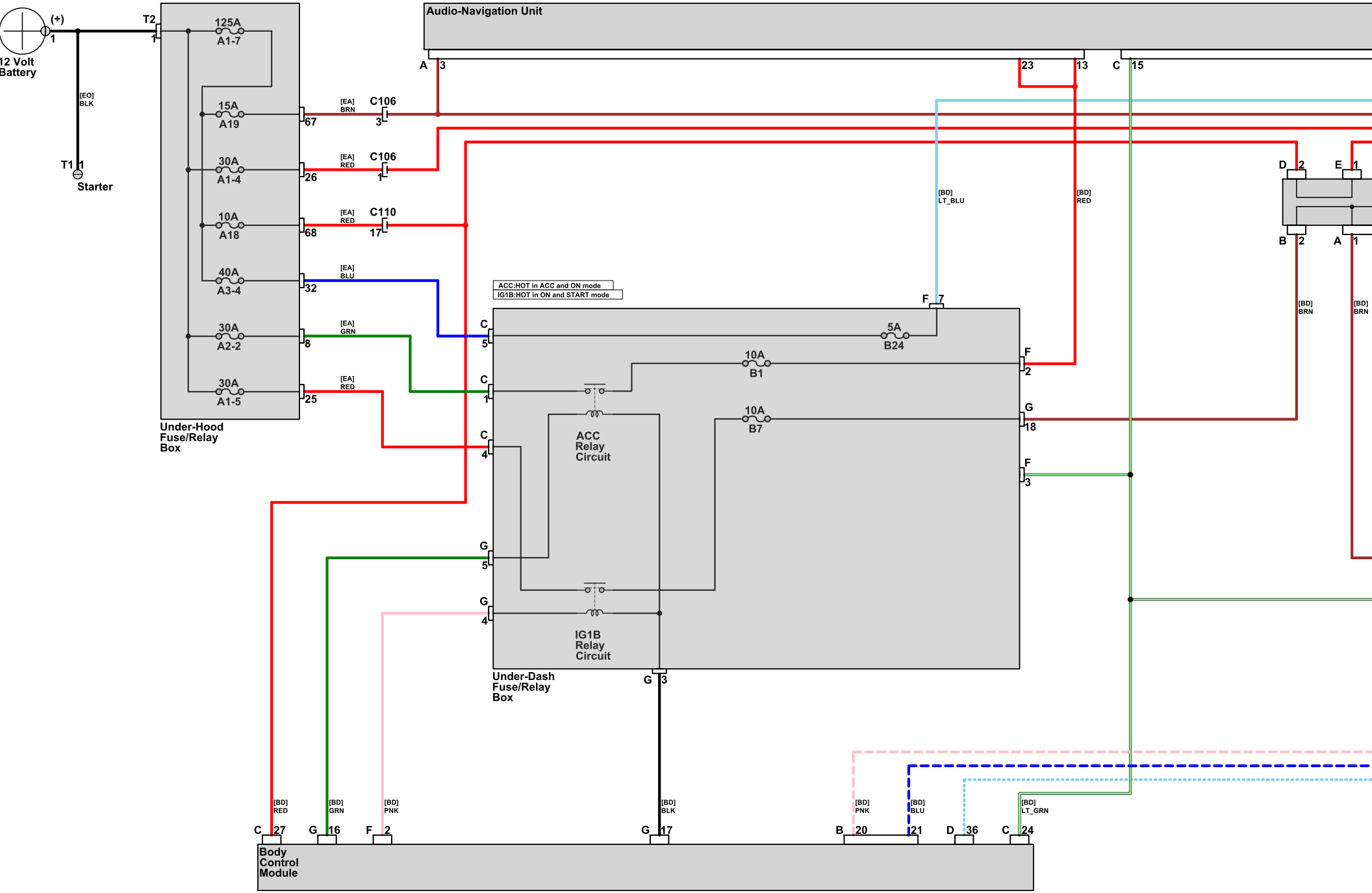
12 Volt Battery
(+)
1
T2
1
[EO] BLK
T1 1
Starter
125A
A1-7
15A
A19
30A
A1-4
10A
A18
40A
A3-4
30A
A2-2
30A
A1-5
67
26
68
32
8
25
Under-Hood Fuse/Relay Box
[EA] BRN
[EA] RED
[EA] RED
[EA] BLU
[EA] GRN
[EA] RED
C106
3
C106
1
C110
17
Audio-Navigation Unit
A 3
23
13
C 15
[BD] LT_BLU
[BD] RED
D 2
E 1
B 2
A 1
[BD] BRN
[BD] BRN
ACC:HOT in ACC and ON mode
IG1B:HOT in ON and START mode
F 7
5A
B24
10A
B1
10A
B7
ACC Relay Circuit
IG1B Relay Circuit
Under-Dash Fuse/Relay Box
G 3
[BD] RED
[BD] GRN
[BD] PNK
[BD] BLK
[BD] PNK
[BD] BLU
[BD] LT_GRN
C 27
G 16
F 2
G 17
B 20
21
D 36
C 24
Body Control Module

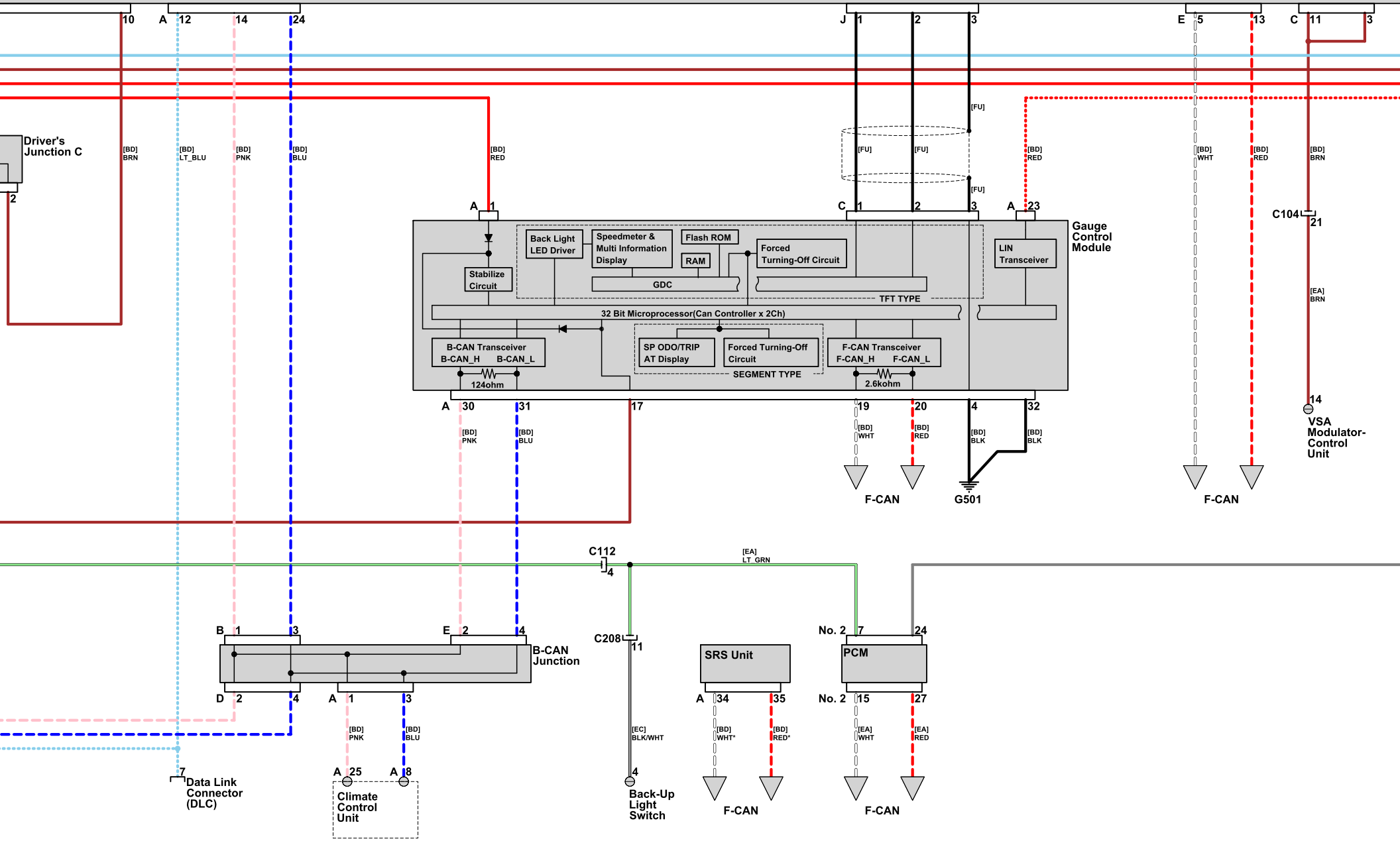
Driver's Junction C
Gauge Control Module
Back Light LED Driver
Speedmeter & Multi Information Display
Flash ROM
RAM
Forced Turning-Off Circuit
Stabilize Circuit
GDC
TFT TYPE
LIN Transceiver
32 Bit Microprocessor(Can Controller x 2Ch)
B-CAN Transceiver
B-CAN_H
B-CAN_L
124ohm
SP ODO/TRIP AT Display
Forced Turning-Off Circuit
SEGMENT TYPE
F-CAN Transceiver
F-CAN_H
F-CAN_L
2.6kohm
F-CAN
G501
F-CAN
C104
VSA Modulator-Control Unit
C112
B-CAN Junction
C208
SRS Unit
PCM
Data Link Connector (DLC)
Climate Control Unit
Back-Up Light Switch
F-CAN
F-CAN

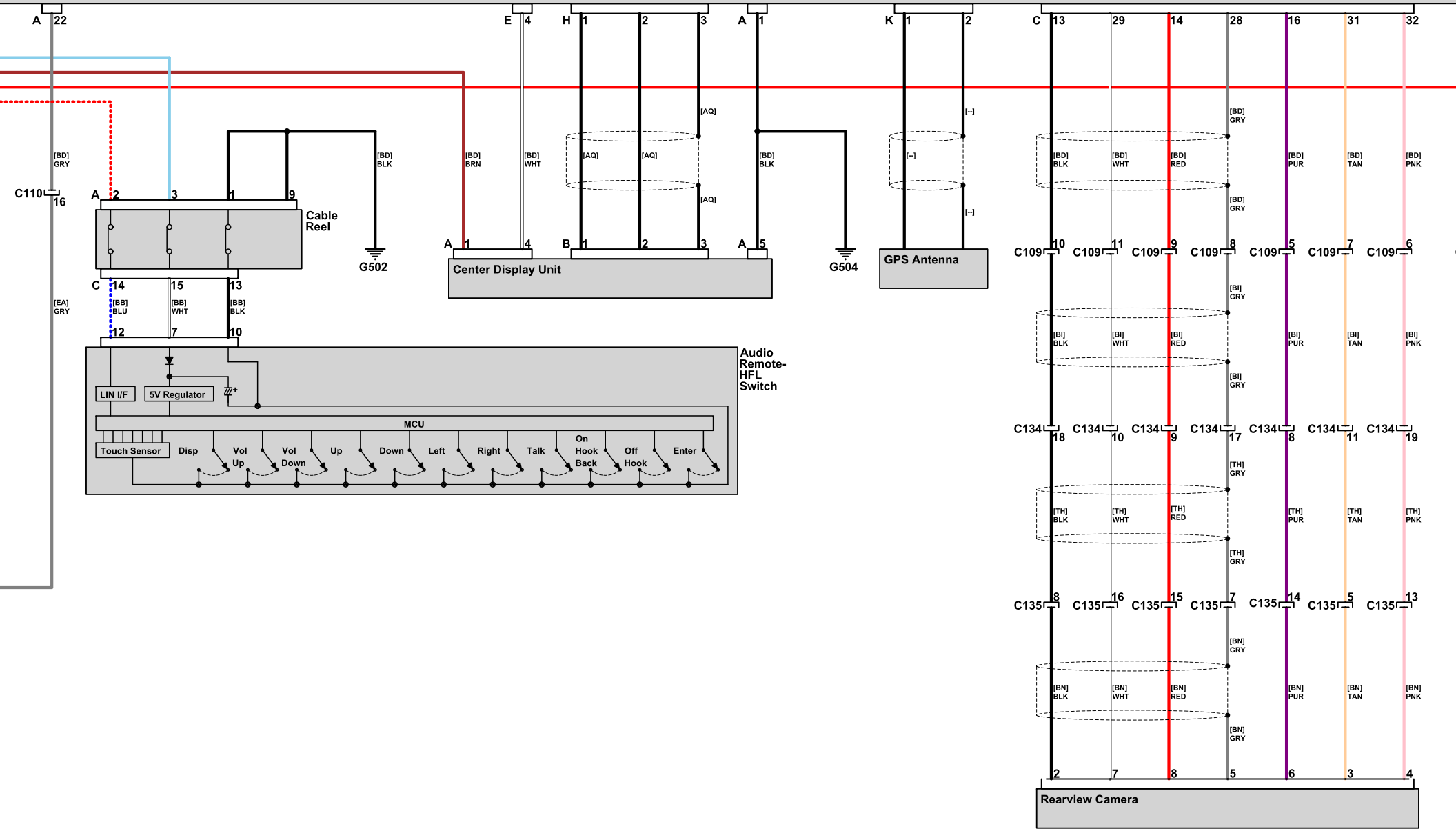
A 22
[BD] GRY
C110 16
A 2 3 1 9
Cable Reel
[BD] BLK
G502
C 14 15 13
[EA] GRY
[BB] BLU
[BB] WHT
[BB] BLK
12 7 10
LIN I/F
5V Regulator
MCU
Touch Sensor
Disp
Vol Up
Vol Down
Up
Down
Left
Right
Talk
On Hook Back
Off Hook
Enter
Audio Remote-HFL Switch
[BD] BRN
E 4
[BD] WHT
A 1 4
Center Display Unit
H 1 2 3
[AQ]
B 1 2 3
A 1
[BD] BLK
A 5
G504
K 1 2
[--]
GPS Antenna
C 13 29 14 28 16 31 32
[BD] GRY
[BD] BLK
[BD] WHT
[BD] RED
[BD] PUR
[BD] TAN
[BD] PNK
C109 10 11 9 8 5 7 6
[BI] GRY
[BI] BLK
[BI] WHT
[BI] RED
[BI] PUR
[BI] TAN
[BI] PNK
C134 18 10 9 17 8 11 19
[TH] GRY
[TH] BLK
[TH] WHT
[TH] RED
[TH] PUR
[TH] TAN
[TH] PNK
C135 8 16 15 7 14 5 13
[BN] GRY
[BN] BLK
[BN] WHT
[BN] RED
[BN] PUR
[BN] TAN
[BN] PNK
2 7 8 5 6 3 4
Rearview Camera

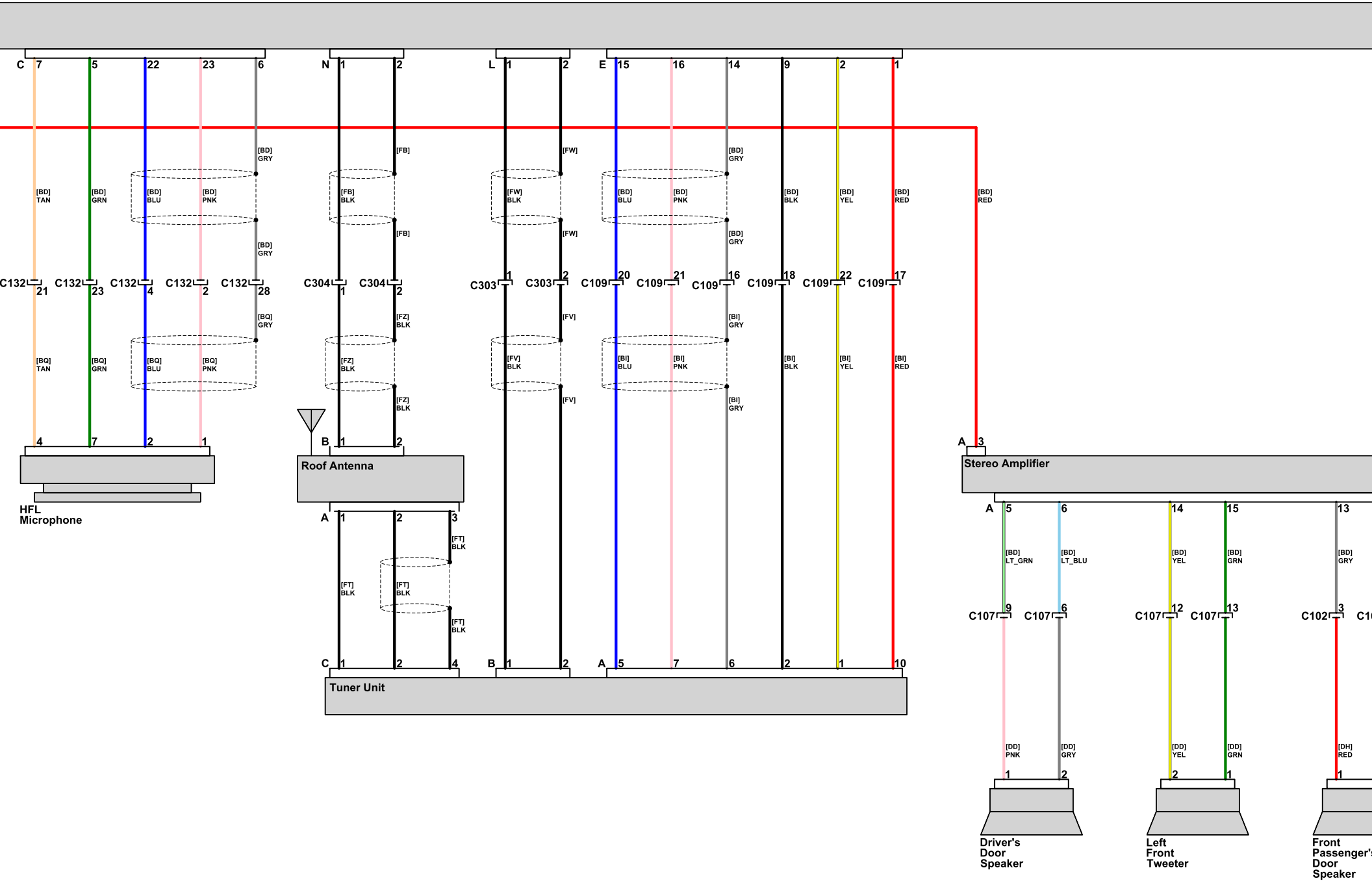
HFL Microphone
Roof Antenna
Tuner Unit
Stereo Amplifier
Driver's Door Speaker
Left Front Tweeter
Front Passenger's Door Speaker

A 21
E 7 8 6
B 2 13 14 1
M 1 3
F 2 3 4 1 5
G 2
[BD] GRY
[BD] GRN
[BD] BLU
[BD] PNK
[BD] ORN
[BD] BRN
[BD] YEL
[AP]
[AP] BLK
[UC]
[UM]
C 14 15 7 4 12 5
D 1 2
4 2 3 1 5
Option Connector (for USB Port A)
12 16 17 11 18 10 9
B 7 8
A 2 4
8 7
B 5 6
[BD] PUR
[BD] LT_GRN
[BD] PNK
[BD] BLU
[BD] WHT
[BD] BLK
[BD] LT_GRN
[BD] WHT
[BD] RED
[BD] YEL
[BD] BRN
[BD] GRY
[BD] LT_BLU
C102 4
C102 7
C109 2
C109 4
C111 4
C111 5
C111 2
C111 3
C109 1
C109 3
C111 6
C111 7
[BI] RED
[BI] GRN
[BI] BLK
[BI] LT_GRN
[BI] LT_GRN
[BI] PNK
[BI] GRY
[BI] LT_BLU
C116 6
C116 9
C116 15
C116 18
C117 6
C117 9
C117 15
C117 18
[DH] LT_BLU
[DH] BLU
[DH] PNK
[BD] BLU
[BD] WHT
[DJ] BLU
[DJ] WHT
[DJ] PNK
[DJ] LT_GRN
[BI] WHT
[BI] RED
[DN] YEL
[DN] BRN
[DN] GRY
[DN] LT_BLU
Right Front Tweeter
Front Center Speaker
Left Rear Door Speaker
Left Rear Door Tweeter
Subwoofer
Right Rear Door Speaker
Right Rear Door Tweeter

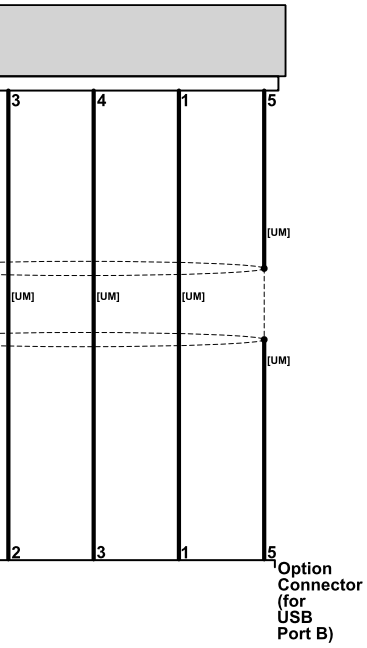
3
4
1
5
[UM]
[UM]
[UM]
[UM]
[UM]
2
3
1
5
Option
Connector
(for
USB
Port B)

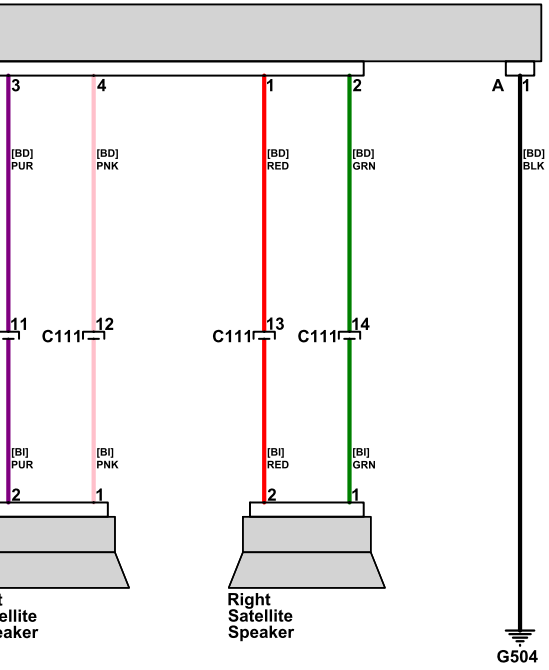
3
4
1
2
A
1
[BD]
PUR
[BD]
PNK
[BD]
RED
[BD]
GRN
[BD]
BLK
11
C111
12
C111
13
C111
14
[BI]
PUR
[BI]
PNK
[BI]
RED
[BI]
GRN
2
1
2
1
Right
Satellite
Speaker
G504