Civic Hatchback Telematics/HandsFreeLink System 1 of 5

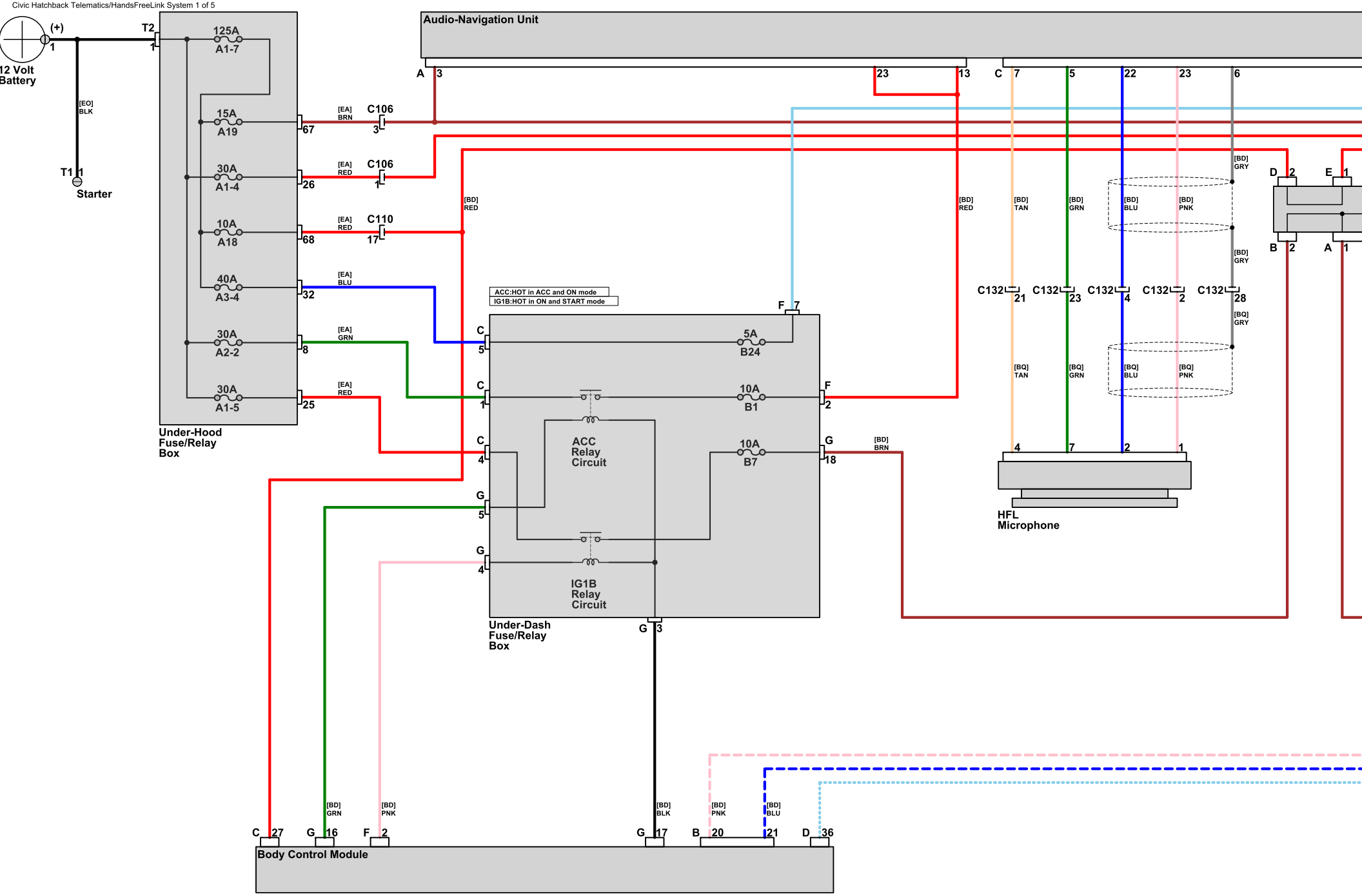

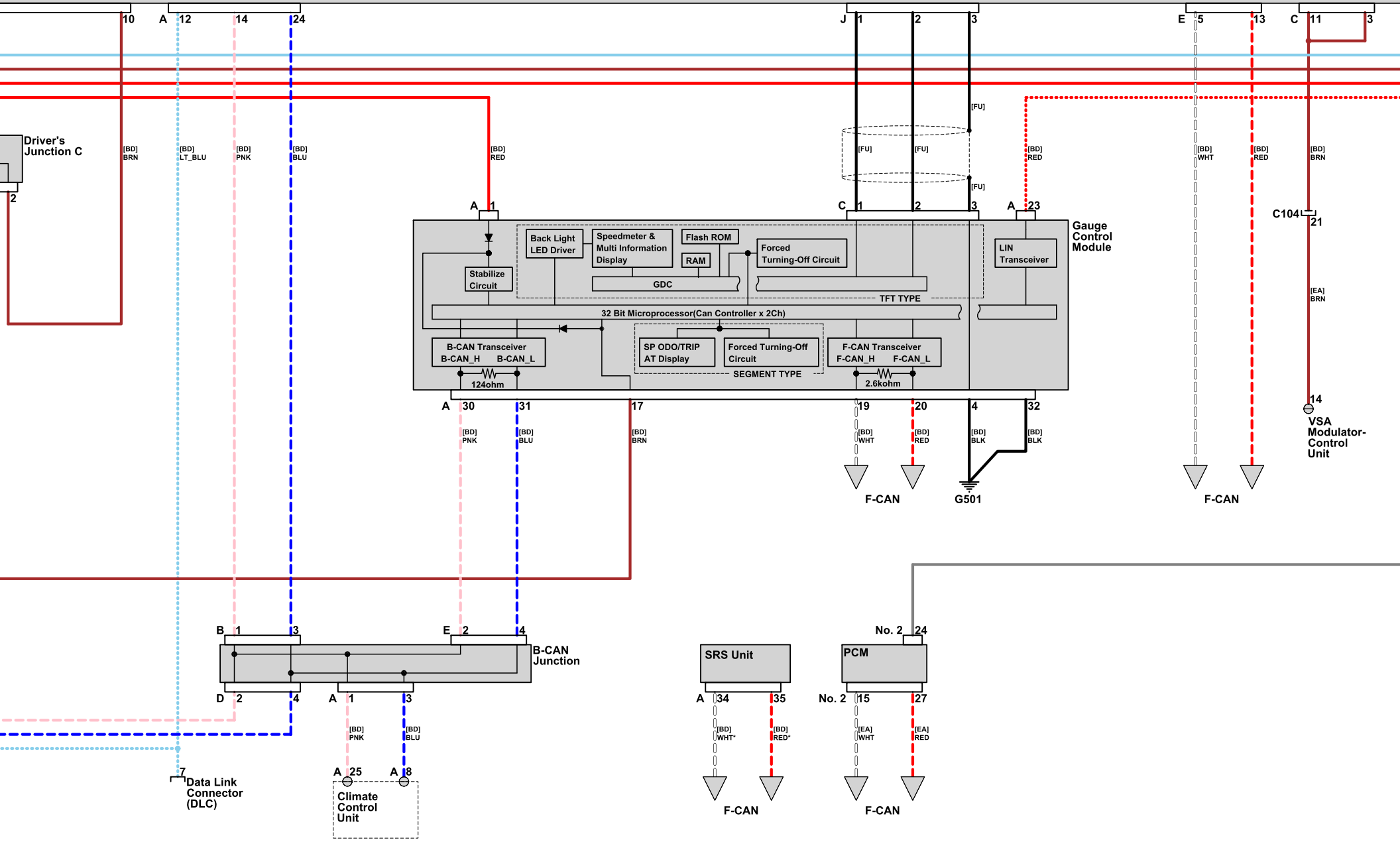
Driver's Junction C
Gauge Control Module
Back Light LED Driver
Speedmeter & Multi Information Display
Flash ROM
RAM
Forced Turning-Off Circuit
Stabilize Circuit
GDC
TFT TYPE
LIN Transceiver
32 Bit Microprocessor(Can Controller x 2Ch)
B-CAN Transceiver
B-CAN_H B-CAN_L
124ohm
SP ODO/TRIP AT Display
Forced Turning-Off Circuit
SEGMENT TYPE
F-CAN Transceiver
F-CAN_H F-CAN_L
2.6kohm
F-CAN
G501
F-CAN
C104
VSA Modulator-Control Unit
B-CAN Junction
Data Link Connector (DLC)
Climate Control Unit
SRS Unit
PCM
F-CAN
F-CAN

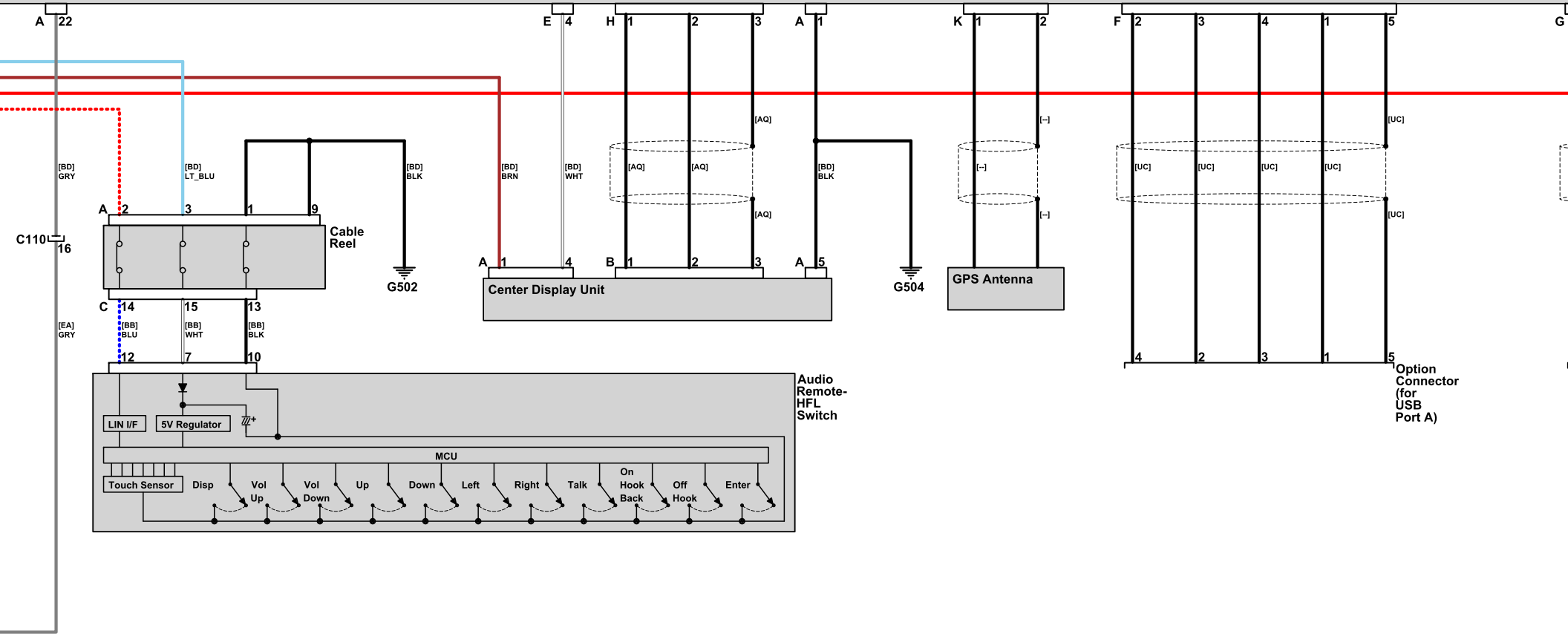
A 22
[BD] GRY
[BD] LT_BLU
[BD] BLK
[BD] BRN
[BD] WHT
[BD] BLK
C110
16
A 2
3
1
9
Cable Reel
G502
C 14
15
13
[EA] GRY
[BB] BLU
[BB] WHT
[BB] BLK
12
7
10
LIN I/F
5V Regulator
MCU
Touch Sensor
Disp
Vol Up
Vol Down
Up
Down
Left
Right
Talk
On Hook Back
Off Hook
Enter
Audio Remote-HFL Switch
E 4
A 1
4
Center Display Unit
H 1
2
3
[AQ]
[AQ]
[AQ]
[AQ]
B 1
2
3
A 1
[BD] BLK
A 5
G504
K 1
2
[--]
[--]
[--]
[--]
GPS Antenna
F 2
3
4
1
5
[UC]
[UC]
[UC]
[UC]
[UC]
[UC]
4
2
3
1
5
Option Connector (for USB Port A)
G

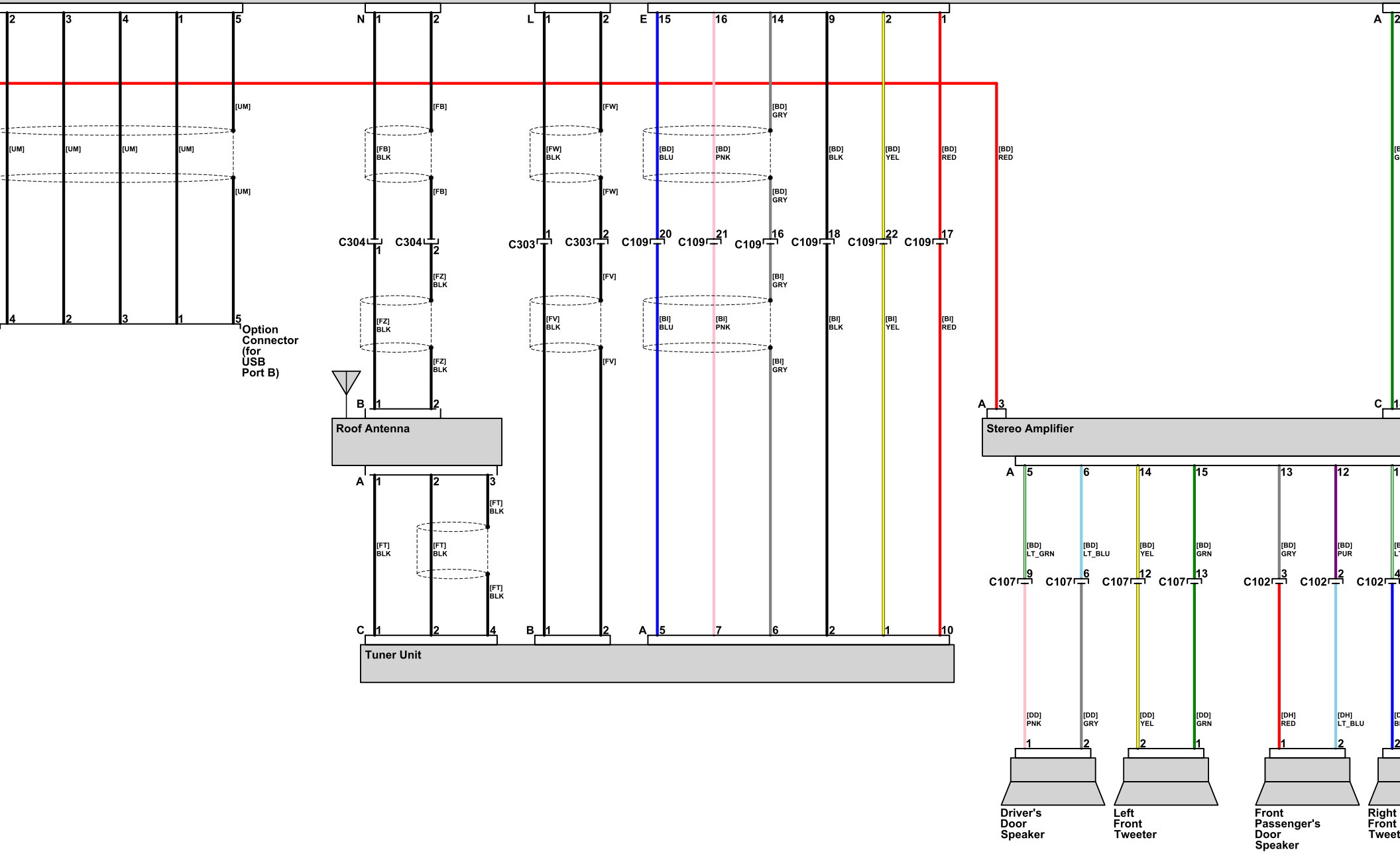
Option Connector (for USB Port B)
Roof Antenna
Tuner Unit
Stereo Amplifier
Driver's Door Speaker
Left Front Tweeter
Front Passenger's Door Speaker
Right Front Tweet
C304
C303
C109
C107
C102
[UM]
[FB] BLK
[FW] BLK
[FZ] BLK
[FV] BLK
[FT] BLK
[BD] GRY
[BD] BLU
[BD] PNK
[BD] BLK
[BD] YEL
[BD] RED
[BI] GRY
[BI] BLU
[BI] PNK
[BI] BLK
[BI] YEL
[BI] RED
[BD] LT_GRN
[BD] LT_BLU
[BD] GRN
[BD] PUR
[DD] PNK
[DD] GRY
[DD] YEL
[DD] GRN
[DH] RED
[DH] LT_BLU

E 7 8 6
B 2 13 14 1
M 1 3
[BD] GRY
[BD] BLU
[BD] PNK
[BD] ORN
[BD] BRN
[BD] YEL
[AP]
[AP] BLK
[AP]
15 7
4 12 5
D 1 2
17 11 18
10 9
B 7 8
A 2 4
8 7
B 5 6
3 4 1 2
A 1
[BD] PNK
[BD] BLU
[BD] WHT
[BD] BLK
[BD] LT_GRN
[BD] WHT
[BD] RED
[BD] YEL
[BD] BRN
[BD] GRY
[BD] LT_BLU
[BD] PUR
[BD] PNK
[BD] RED
[BD] GRN
C102 7
C109 2 C109 4 C111 4 C111 5
C111 2 C111 3
C109 1 C109 3 C111 6 C111 7
C111 11 C111 12 C111 13 C111 14
[BI] RED
[BI] GRN
[BI] BLK
[BI] LT_GRN
[BI] LT_GRN
[BI] PNK
[BI] GRY
[BI] LT_BLU
C116 6 C116 9 C116 15 C116 18
C117 6 C117 9 C117 15 C117 18
[DH] PNK
[BD] BLU
[BD] WHT
[DJ] BLU
[DJ] WHT
[DJ] PNK
[DJ] LT_GRN
[BI] WHT
[BI] RED
[DN] YEL
[DN] BRN
[DN] GRY
[DN] LT_BLU
[BI] PUR
[BI] PNK
[BI] RED
[BI] GRN
[BD] BLK
1 1 2 2 2 1 1 2 1 2 1 2 2 1 2 1 2 1 2 1
Front Center Speaker
Left Rear Door Speaker
Left Rear Door Tweeter
Subwoofer
Right Rear Door Speaker
Right Rear Door Tweeter
Left Satellite Speaker
Right Satellite Speaker
G504