NOTES:

1. WHERE APPLICABLE, UNLESS OTHERWISE SPECIFIED:
   ALL RESISTANCES ARE IN OHMS
   ALL CAPACITANCES ARE IN FARADS
   ALL VOLTAGES ARE DC
   THE SYMBOL _ REPRESENTS A SPACE

2. DNI = DO NOT INSTALL

REVISIONS	
REV	DESCRIPTION
–	Initial Release

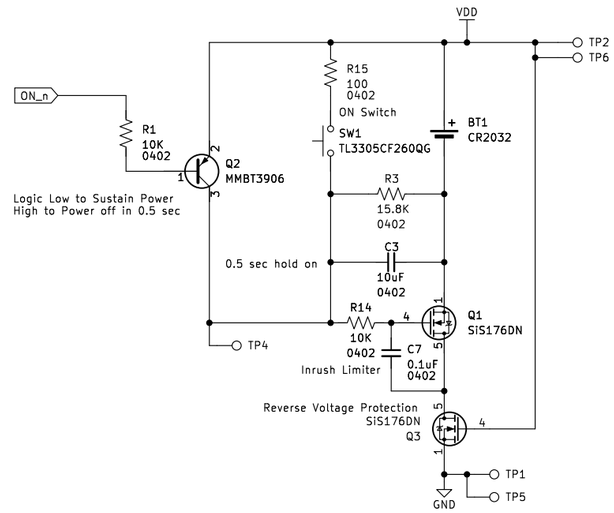

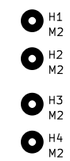

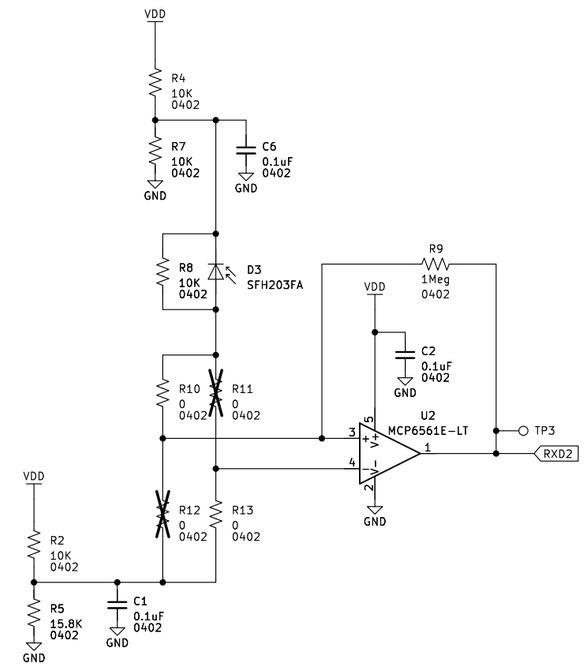

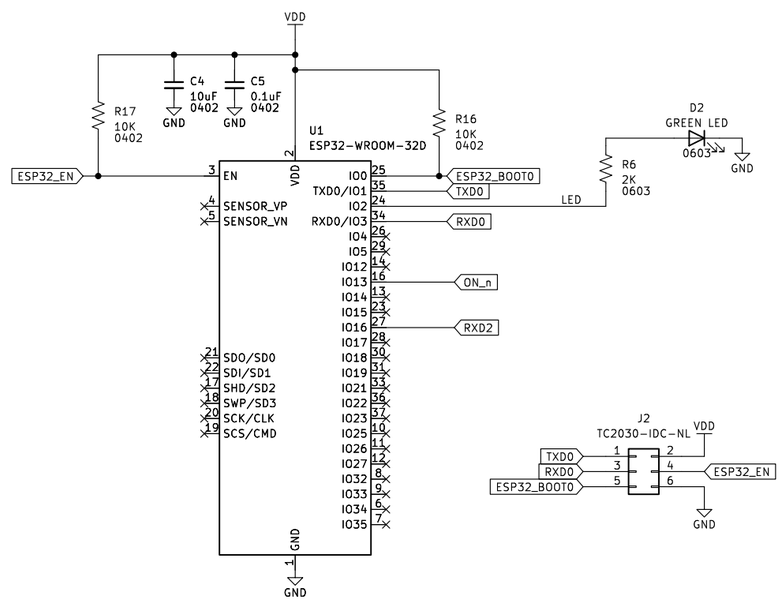

These items are controlled by the U.S. Government and authorized for export only to the country of ultimate destination for use by the ultimate consignee or end-user(s) herein identified. They may not be resold, transferred, or otherwise disposed of, to any other country or to any person other than the authorized ultimate consignee or end-user(s), either in their original form or after being incorporated into other items, without first obtaining approval from the U.S. government or as otherwise authorized by U.S. law and regulations.

FILE: Safe-To-Mate-O-Matic-v4.kicad_sch
DATE: 2024-04-11
KICad E.D.A. kicad 7.0.6

THE JOHNS HOPKINS UNIVERSITY
APPLIED PHYSICS LABORATORY
JOHNS HOPKINS ROAD LAUREL, MD 20723-6099

SCHEMATIC
Safe-To-Mate-O-Matic V4
DRAGONFLY

CAGE CODE	SIZE	DWG NO.	REV
88898	B	5303-0191	A
SCALE: NONE	DO NOT SCALE PRINT	SHEET 1 OF 1	