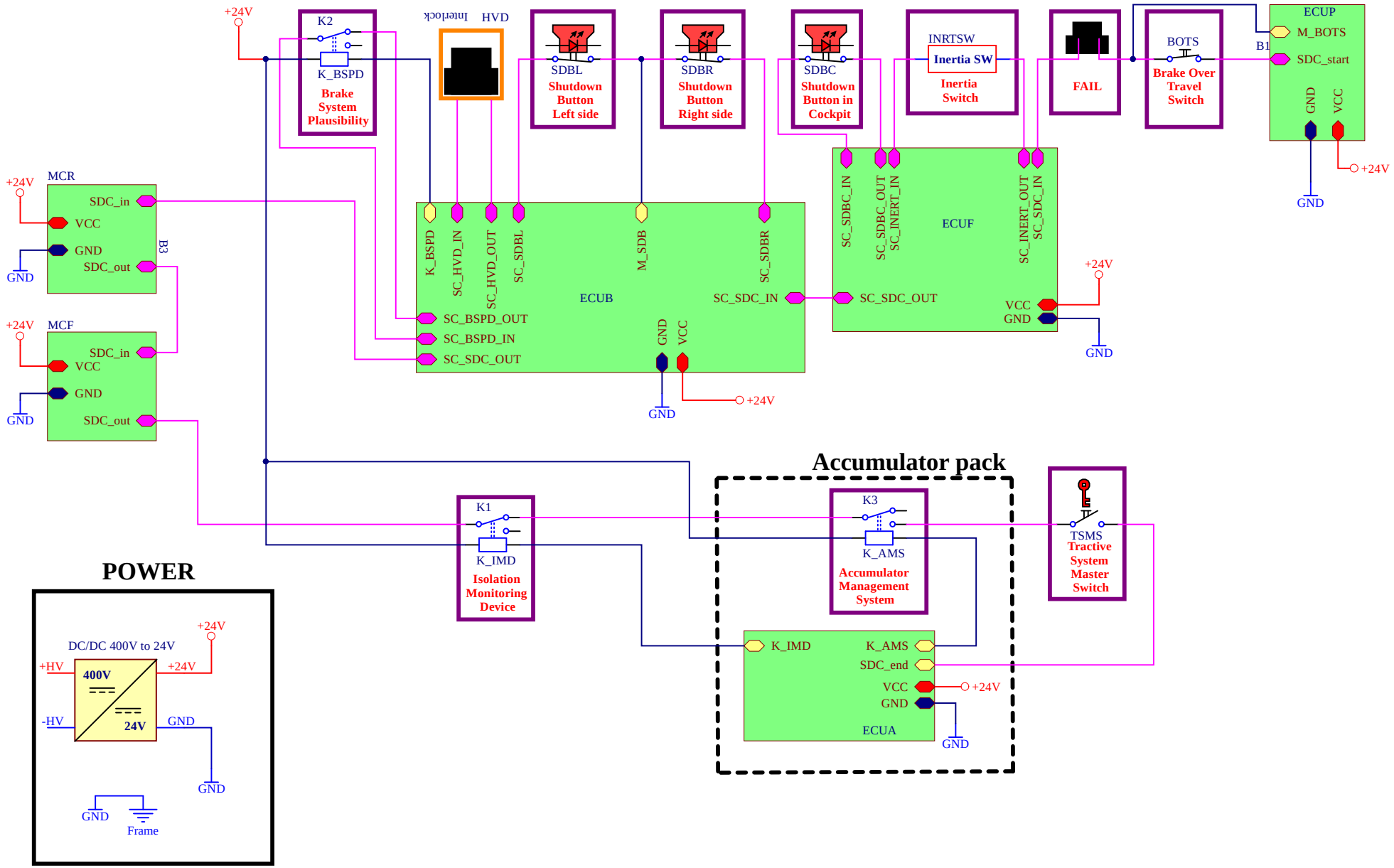

Name:	ProjectNameShown SDC block scheme		FORCE PRAGUE FORMULA
Author:	Weslo	Version: 1.0	
Date:	27. 3. 2018	Sheet 1 of 1	
File:	FSE07SDC_scheme.SchDoc		