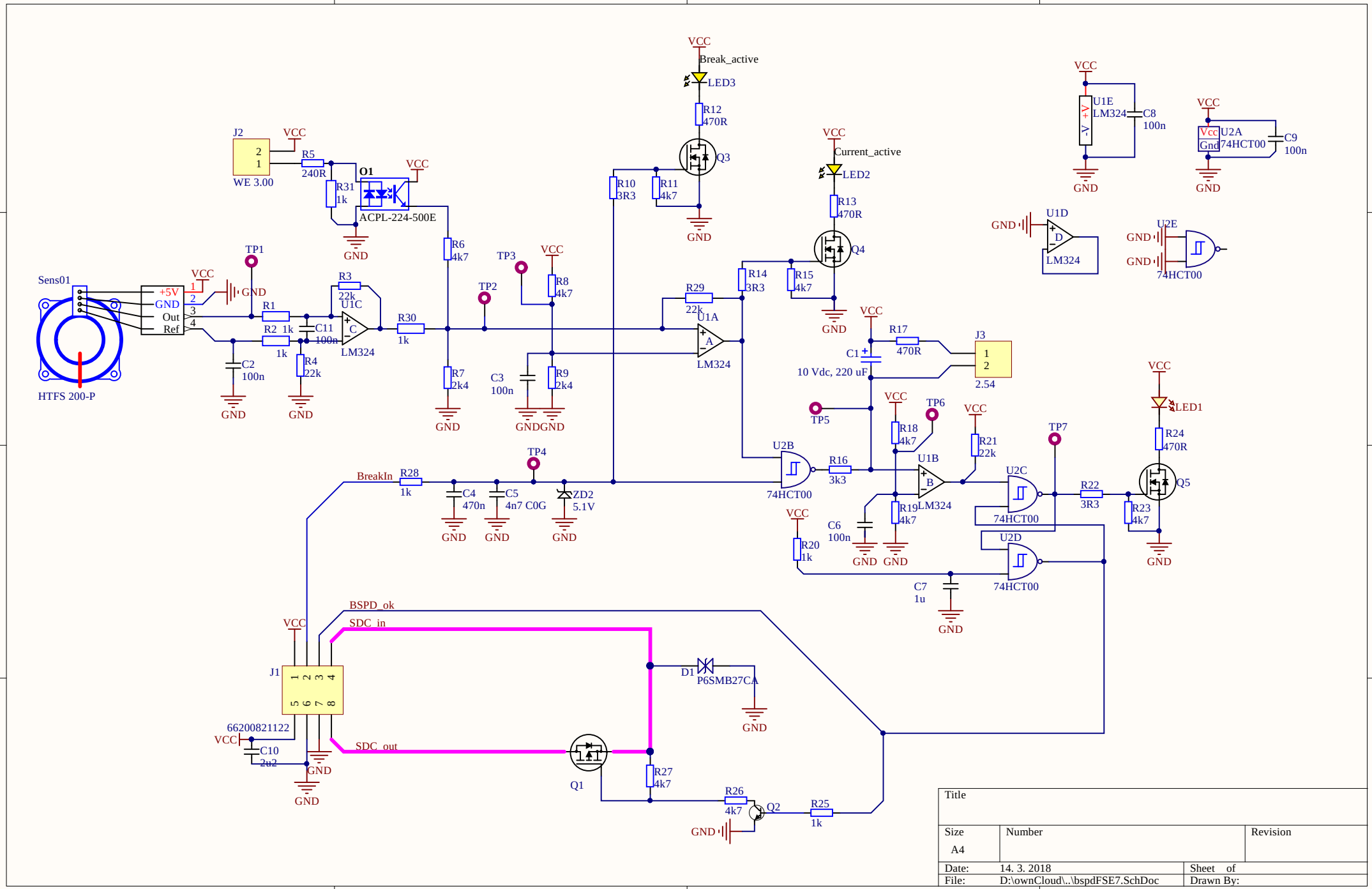

Title		
Size A4	Number	Revision
Date: 14. 3. 2018		Sheet of
File: D:\ownCloud\..\bspdFSE7.SchDoc		Drawn By: