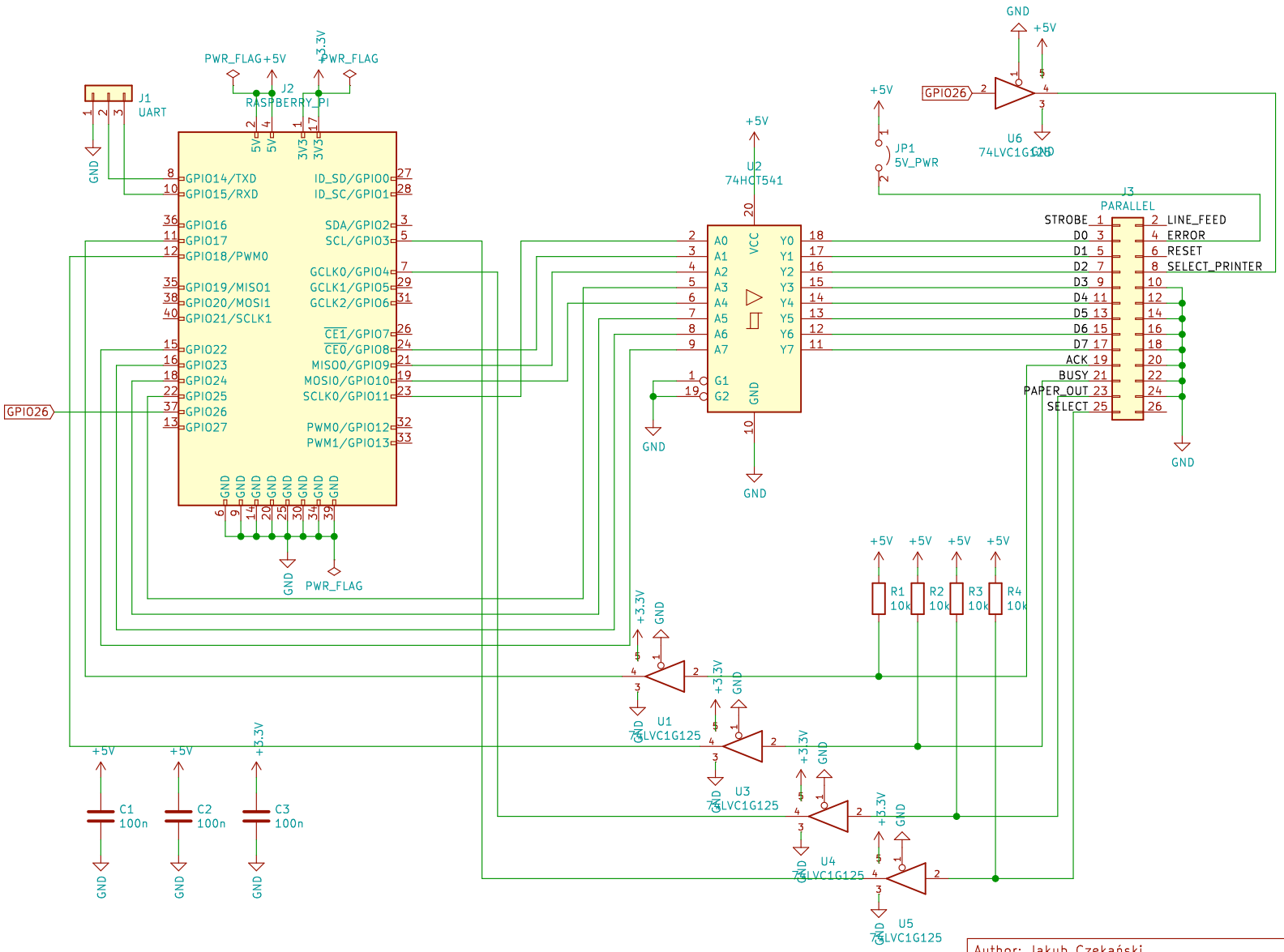

Author: Jakub Czekański
License: CC BY 4.0
creativecommons.org/licenses/by/4.0

Sheet: /
File: raspberry-to-caetla.sch

Title: Raspberry to Caetla interface

Size: A4	Date: 2019-10-01	Rev: v1.1
KiCad E.D.A. kicad (5.1.4-0-10_14)		Id: 1/1