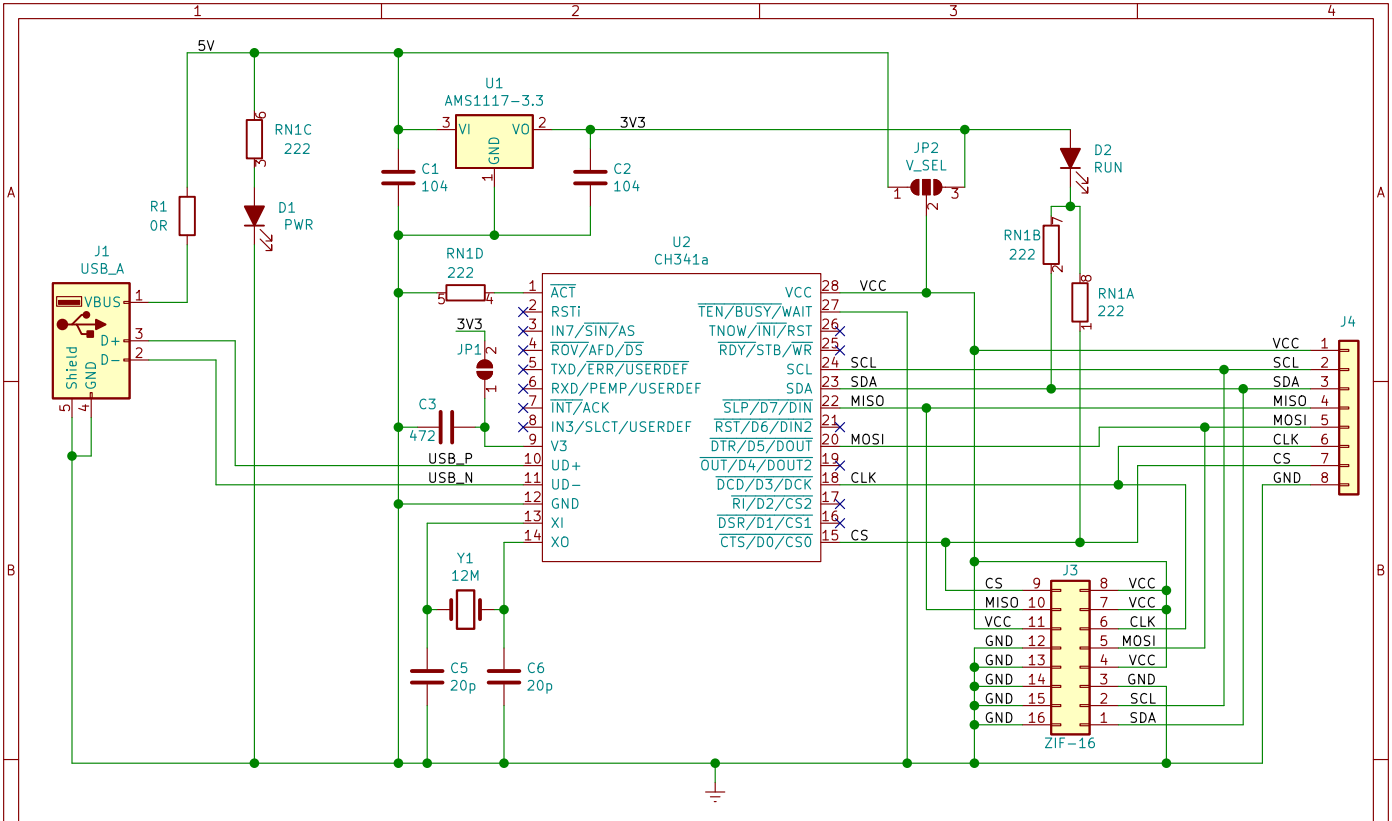

JackCarterSmith originally from Ray Tracer / Jake L

Sheet: /

File: CH341Apro.sch

Title: CH341A Programmer

Size: User	Date: 2021-03-12	Rev: V0.2a
KiCad E.D.A. kicad (5.1.8)-1		Id: 1/1