V4.5

Common mistakes in EF Core

NDC Porto 2023

Join the Conversation @SSW_TV @jernej_kavka #EFCore

Jernej Kavka (JK)

SSW Solution Architect

@Jernej_kavka

github.com/jernejk

jkdev.me

linkedin.com/in/jernejkavka/

Brisbane Full Stack User Group

Host @ Global AI The Podcast

.NET Core and EF Core dev specialist

Microsoft AI MVP and ChatGPT enthusiast at night

Join the Conversation @SSW_TV @jernej_kavka #EFCore

Agenda

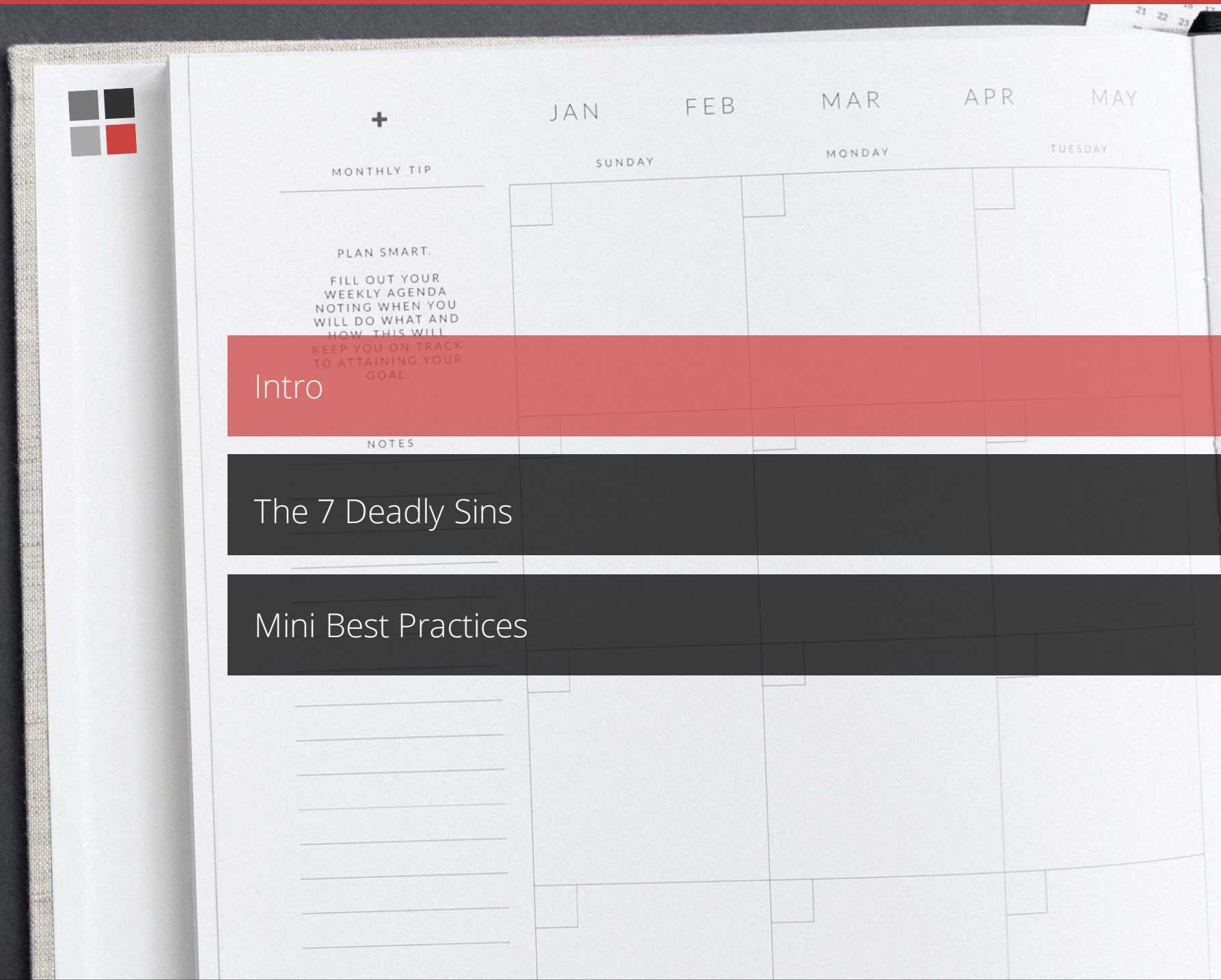

Intro

The 7 Deadly Sins

Mini Best Practices

We have lots of DB engines data access landscape

- SQL Server
- Cosmos DB
- PostgreSQL
- MySQL

Various ORM

- EF Core (multiple DBs)
- Dapper (multiple DBs)
- Marten (PostgreSQL)
- Cosmos DB SDK

Why EF Core

- Great balance
  - Features
  - Flexibility
  - Performance
- Awesome for relational DBs
- Built-in migrations, DB scaffolding and other tooling

Maxim of *quantity*

be as informative as required, but not more

Maxim of *truth*

only say things you know, or reasonably believe, to be true

Maxim of *relevance*

don't include information you do not know to be relevant

Maxim of *clarity*

avoid ambiguity and obscure language, and present your message in a way that is easy to process

Eli Holderness - "Language Games"
The theory of the cooperative principle

Avoid the pain

- The EF Core issues that are solved
- Simplifying your code
- Benchmark your code with tests
- The horror I have seen... 😱

Benchmark tools

- BenchmarkDotNet

  Memory consumption and time difference

- Bombardier

  Simple CLI load testing tool

My testing environment

- .NET 7 with EF Core 7
- My beefy PC
  - CPU: Ryzen 9 5900X
    - Cores: 12
    - Threads: 24
  - Ram: 32GB

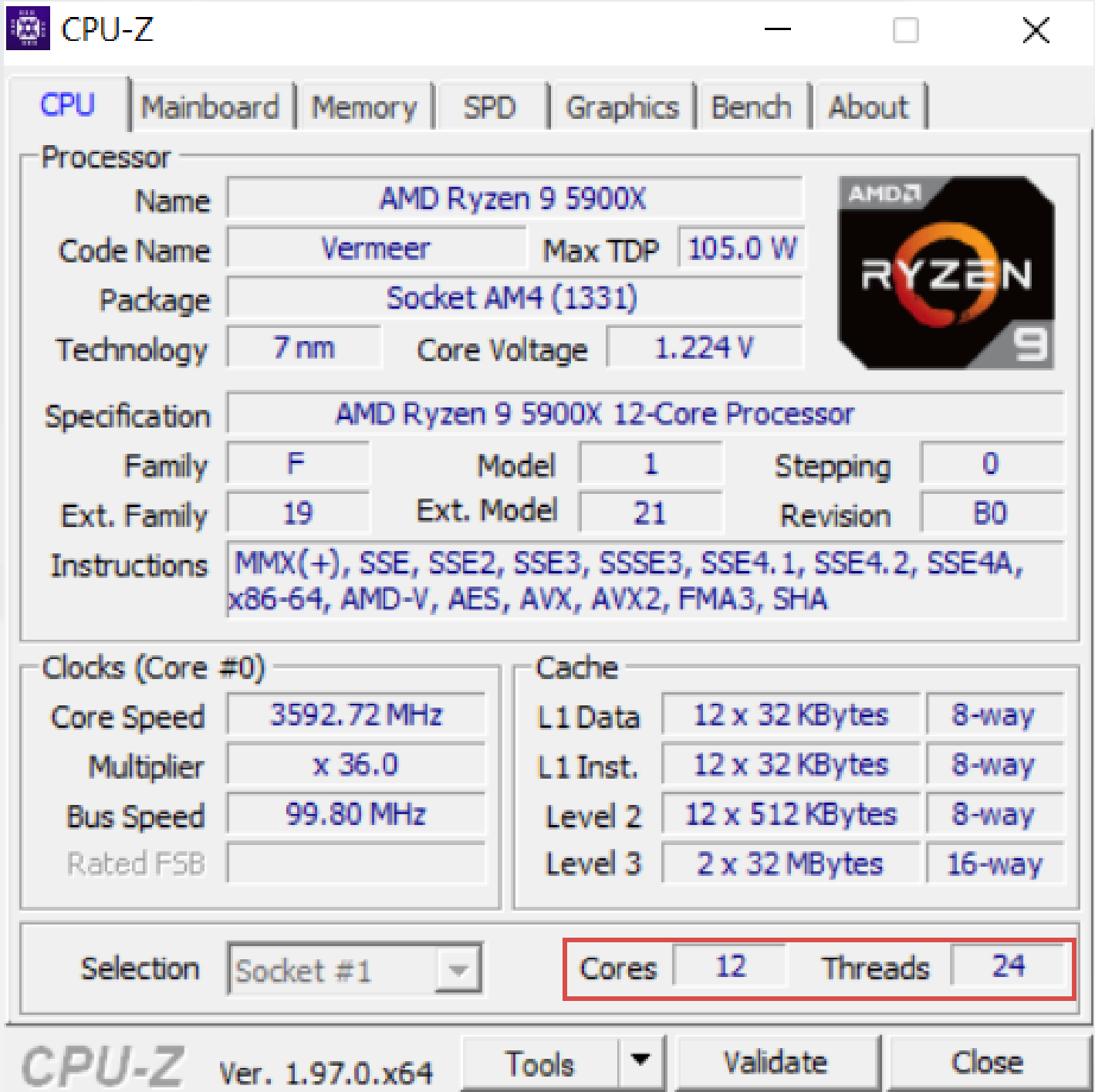

Test data

- 7 million sales
- 504 products
- 23 employees
- 20,000 customers

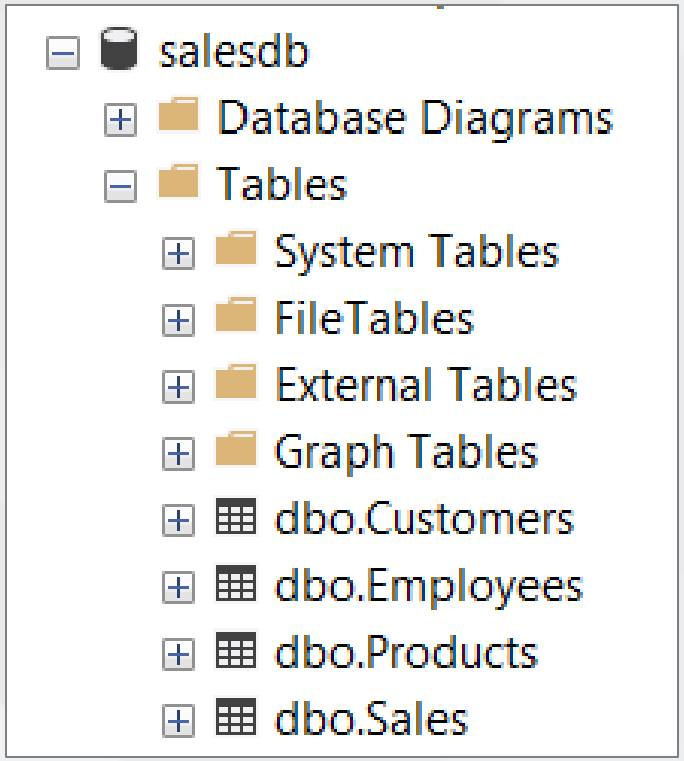

https://www.sqlskills.com/sql-server-resources/sql-server-demos/

The 7 Deadly Sins

The 7 Deadly EF Core Sins (easy to hard)

1. Casting **`IQueryable`** -> **`IEnumerable`**
2. Not using **`AsNoTracking`** (when appropriate)
3. Explicit joins
4. Getting all the columns
5. No pagination
6. Non-cancellable queries
7. Inefficient updates/deletes

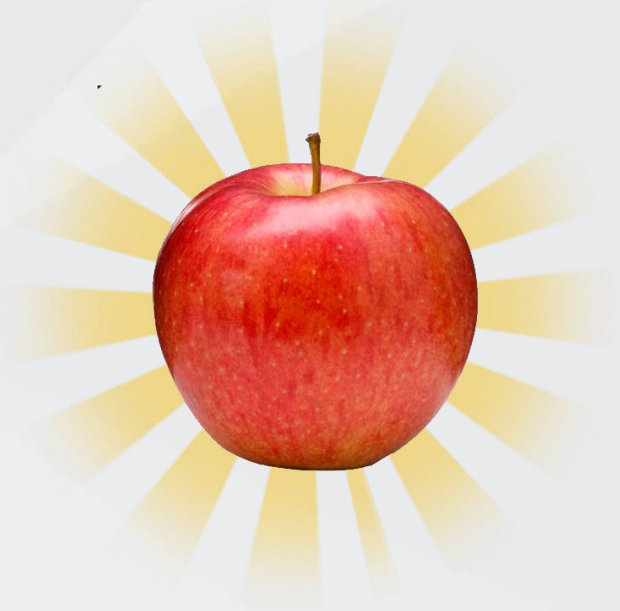

"How bad can it be?"

(you never want the answer to this 😱)

- Literally everyone before discovering the horrifying truth

#1 IQueryable -> IEnumerable

```
[Benchmark]
0 references | 0 changes | 0 authors, 0 changes
public int NaiveCount()
{
    return SalesDbContext.Sales
        .ToList()
        .Count;
}
```

```
[Benchmark]
0 references | 0 changes | 0 authors, 0 changes
public int QuerableToEnumerableCount()
{
    IEnumerable<Sale> sales = SalesDbContext.Sales;
    return sales.Count();
}
```

```
[Benchmark]
0 references | 0 changes | 0 authors, 0 changes
public int ImplicitEnumerableCount()
{
    return GetSalesEnumerable().Count();
}

1 reference | 0 changes | 0 authors, 0 changes
private IEnumerable<Sale> GetSalesEnumerable()
{
    return SalesDbContext.Sales;
}
```

⚠

THEY ARE ALL THE SAME

#1 What is going on?

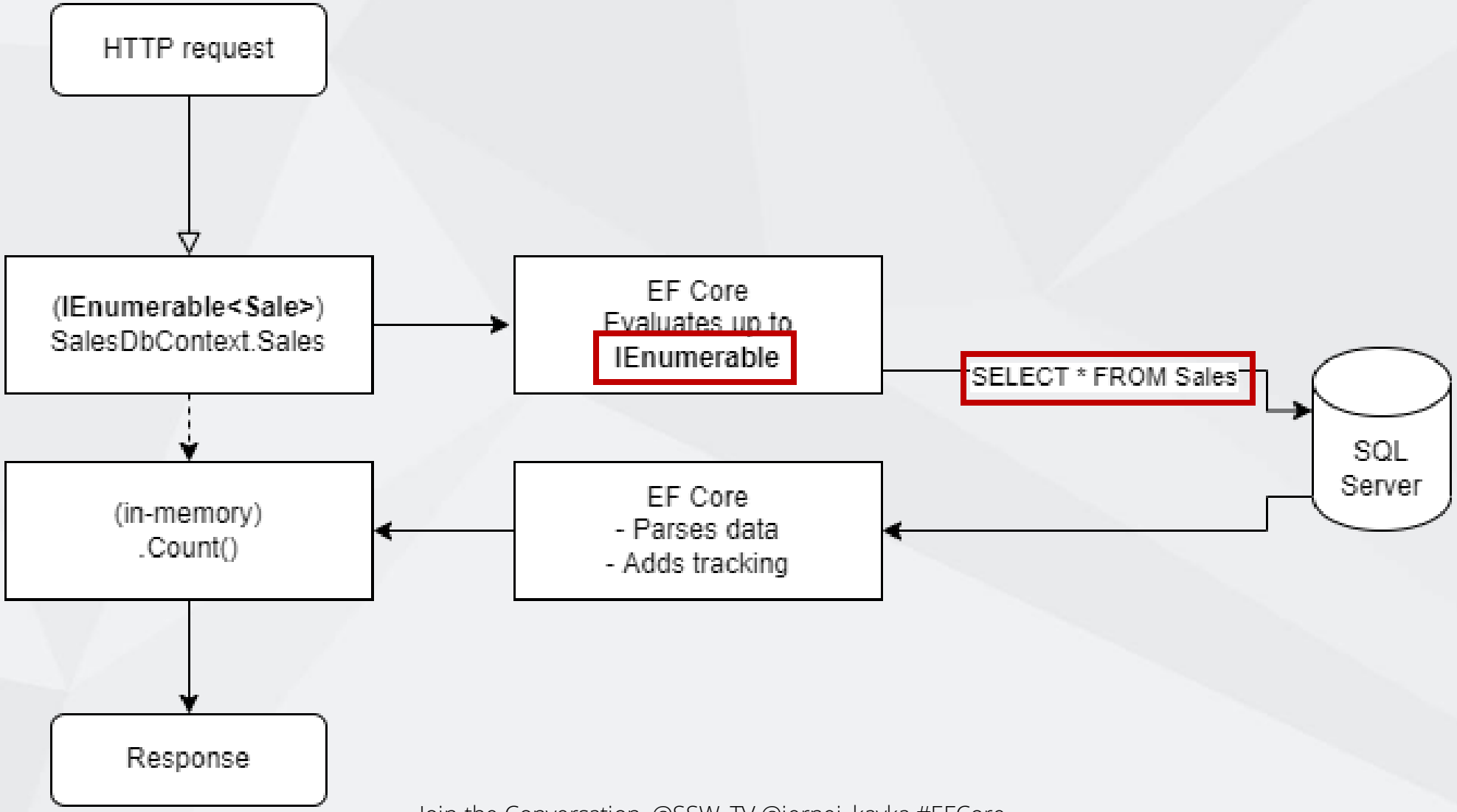

#1 IQueryable

```
[Benchmark(Baseline = true)]
0 references | 0 changes | 0 authors, 0 changes
public int CountInDb()
{
    return GetSales().Count();
}

1 reference | 0 changes | 0 authors, 0 changes
private IQueryable<Sale> GetSales()
{
    return SalesDbContext.Sales;
}
```

#1 How is this better?

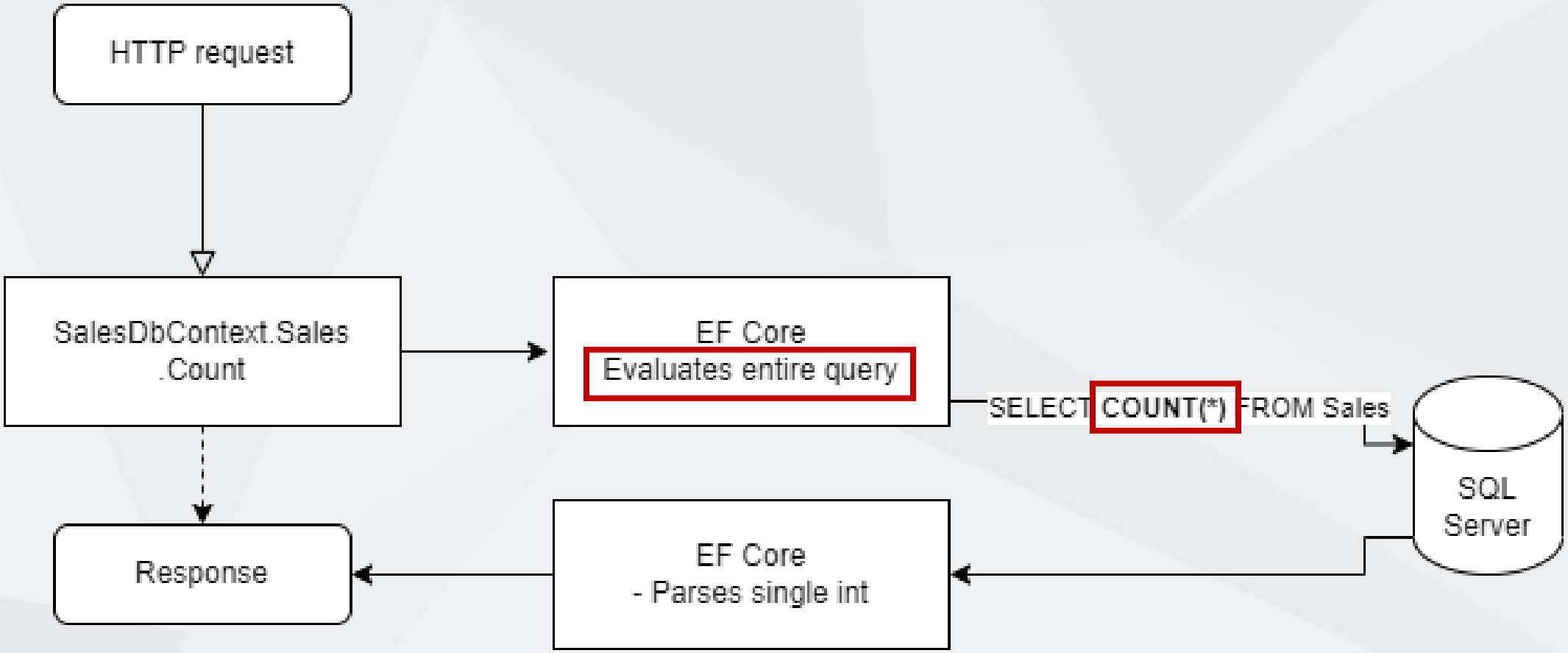

IQueryable + EF Core (EF Core LINQ)
≠
IEnumerable (Standard LINQ)

#1 What is the memory impact?

Method	Mean	Error	StdDev	Ratio	RatioSD	Gen 0	Allocated
NaiveCount	3,675.44 ms	69.775 ms	71.654 ms	63.91	1.78	224000.0000	1,967,272 KB
CountInDb	57.52 ms	0.663 ms	0.588 ms	1.00	0.00	-	6 KB

Full **3.5 seconds** faster!

64 times faster

~**million** times less memory

#1 What about load testing?

```
❯ bombardier -c 5 -t 60s -d 60s -l https://localhost:5001/ExamplesCount/worstCase
Bombarding https://localhost:5001/ExamplesCount/worstCase for 1m0s using 5 connection(s)
[=========================================================================================
Done!
Statistics        Avg      Stdev        Max
  Reqs/sec         0.09       3.10     149.94
  Latency        33.36s      7.62s     47.20s
```

```
❯ bombardier -c 5 -t 60s -d 60s -l https://localhost:5001/ExamplesCount/bestCase
Bombarding https://localhost:5001/ExamplesCount/bestCase for 1m0s using 5 connection(s)
[=========================================================================================
Done!
Statistics        Avg      Stdev        Max
  Reqs/sec        38.34      21.26     235.24
  Latency      128.69ms    23.25ms   269.06ms
```

~260x faster on average in a load test!

#2 AsNoTracking

Exclude change tracking on entities

Less memory and CPU usage

⚠ Changes to the entities are **not tracked** ⚠

```
[Benchmark]
0 references | 0 changes | 0 authors, 0 changes
public List<Sale> GetSalesAsNoTracking()
{
    return SalesDbContext.Sales
        .AsNoTracking()
        .Where(x => x.CustomerId == 7)
        .ToList();
}
```

#2 What is happening?

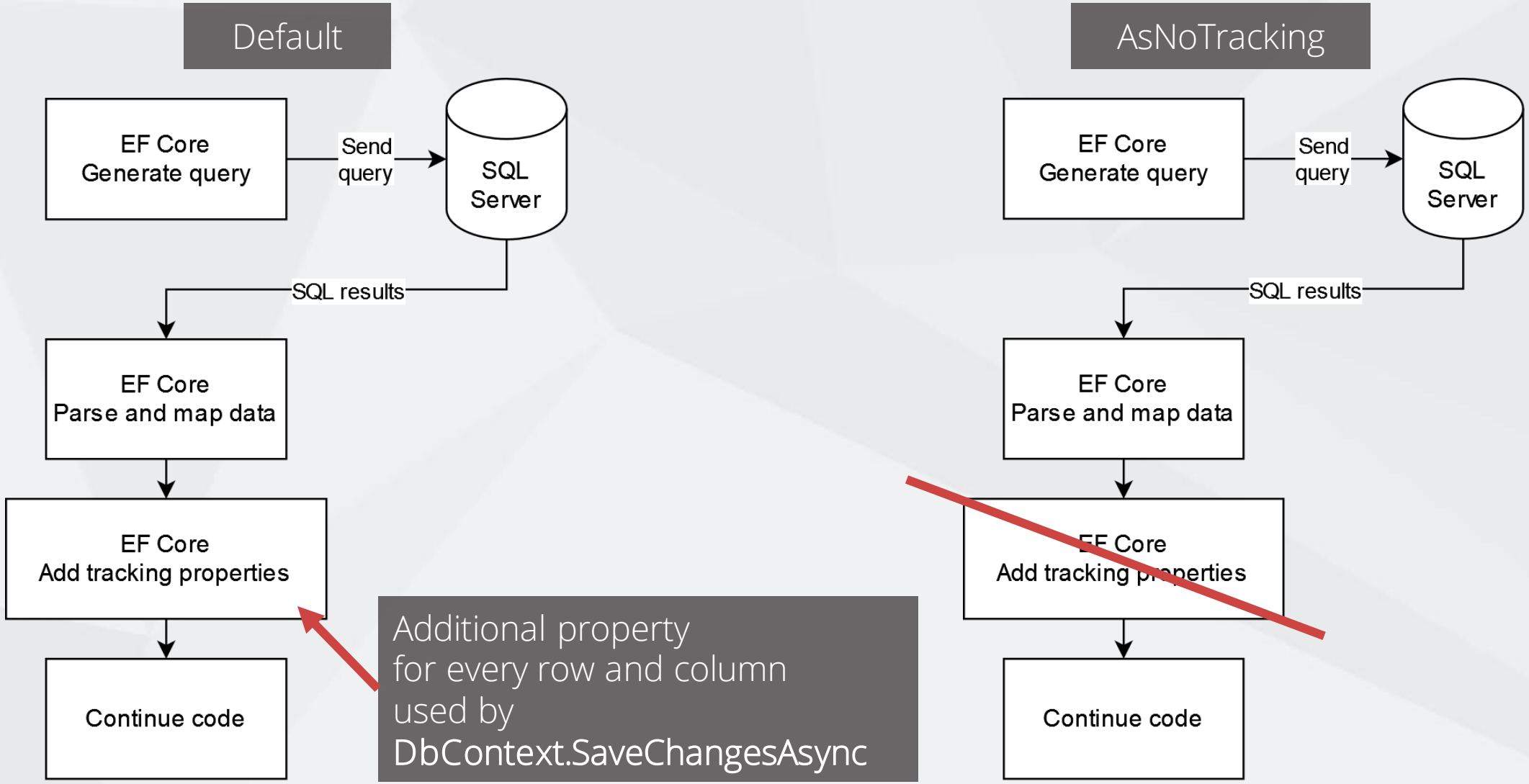

Additional property
for every row and column
used by
DbContext.SaveChangesAsync

#2 What is the impact?

Method	Mean	Error	StdDev	Ratio	Gen 0	Gen 1	Gen 2	Allocated
GetSalesQueryable	2,014.2 ms	39.37 ms	36.83 ms	1.00	65000.0000	19000.0000	2000.0000	582 MB
GetSalesAsNoTracking	387.4 ms	7.64 ms	13.58 ms	0.19	17000.0000	7000.0000	-	147 MB

~1.6 **seconds** faster!

~**5** times faster

~**4x** less memory

⚠ Results be wildly different between queries and DB providers! ⚠
Some found it has no effect on SQLite DB provider

#2 What about load testing?

```
> bombardier -c 5 -t 60s -d 60s -l https://localhost:5001/ExamplesWhere/where
Bombarding https://localhost:5001/ExamplesWhere/where for 1m0s using 5 connection(s)
[=========================================================================================
Done!
Statistics        Avg      Stdev        Max
  Reqs/sec         3.68      12.10     199.96
  Latency         1.40s   371.46ms      2.66s
```

```
> bombardier -c 5 -t 60s -d 60s -l https://localhost:5001/ExamplesWhere/whereNoTracking
Bombarding https://localhost:5001/ExamplesWhere/whereNoTracking for 1m0s using 5 connection(s)
[=========================================================================================
Done!
Statistics        Avg      Stdev        Max
  Reqs/sec        14.72      13.34     249.94
  Latency      358.92ms   105.40ms      1.48s
```

~4x faster on average in a load test!

#3 Explicit includes

```
.Include(x => x.Customers)
```

They are always included even if not needed

- Devs often forget to remove them
- We get all columns even if we don’t need them

#3 & #4 Implicit includes with Select

```
var query = _dbContext.Sales
    .AsNoTracking()
    .TagWithContext()
    .Include(x => x.SalesPerson)
    .Where(x => x.SalesPersonId == 1);
```

```
var query = _dbContext.Sales
    .AsNoTracking()
    .Where(x => x.SalesPersonId == 1)
    .Select(x => new SalesWithSalesPerson
    {
        CustomerId = x.CustomerId,
        SalesId = x.SalesPersonId,
        ProductId = x.ProductId,
        Quantity = x.Quantity,
        SalesPersonId = x.SalesPersonId,
        SalesPersonFirstName = x.SalesPerson.FirstName,
        SalesPersonLastName = x.SalesPerson.LastName
    });
```

#3 & #4 Load Test

```
❯ bombardier -c 5 -t 60s -d 60s -l https://localhost:5001/ExamplesJoin/badCase
Bombarding https://localhost:5001/ExamplesJoin/badCase for 1m0s using 5 connection(s)
[=========================================================================================
Done!
Statistics        Avg      Stdev        Max
  Reqs/sec         2.90      11.85     238.05
  Latency         1.92s   561.85ms      5.16s
```

```
❯ bombardier -c 5 -t 60s -d 60s -l https://localhost:5001/ExamplesJoin/implicitJoin
Bombarding https://localhost:5001/ExamplesJoin/implicitJoin for 1m0s using 5 connection(s)
[=========================================================================================
Done!
Statistics        Avg      Stdev        Max
  Reqs/sec         7.49      25.53     263.10
  Latency      748.18ms   575.21ms      5.30s
```

~2.5x faster on average in a load test!

#5 Common Pagination issues

- Inefficient code
  - Filter data
  - Get all filtered data
  - Count them
  - Apply Take and Skip in-memory for pagination

#5 Pagination code – naïve

```
IQueryable<Sale> query = _dbContext.Sales
    .AsNoTracking()
    // Very commonly used in combination of in-memory pagination, making things even worse
    .Include(x => x.SalesPerson)
    .Where(x => x.SalesPersonId == salesPersonId);

List<Sale> dbResult = await query.ToListAsync(ct);
int count = dbResult.Count;
List<SalesWithSalesPerson> result = dbResult
    .Skip(page * pageSize)
    .Take(pageSize)
    .Select(x => new SalesWithSalesPerson
    {
        CustomerId = x.CustomerId,
        SalesId = x.SalesPersonId,
        ProductId = x.ProductId,
        Quantity = x.Quantity,
        SalesPersonId = x.SalesPersonId,
        SalesPersonFirstName = x.SalesPerson.FirstName,
        SalesPersonLastName = x.SalesPerson.LastName
    })
    .ToList();
```

Gets all filtered data

Count in-memory

Pagination is done In-memory

#5 Pagination code – improved

```
IQueryable<SalesWithSalesPerson> query = _dbContext.Sales
    .AsNoTracking()
    .Where(x => x.SalesPersonId == salesPersonId)
    .Select(x => new SalesWithSalesPerson
    {
        CustomerId = x.CustomerId,
        SalesId = x.SalesPersonId,
        ProductId = x.ProductId,
        Quantity = x.Quantity,
        SalesPersonId = x.SalesPersonId,
        SalesPersonFirstName = x.SalesPerson.FirstName,
        SalesPersonLastName = x.SalesPerson.LastName
    });

// After all conditions are applied, count them in DB.
int count = await query.CountAsync(ct)

// Apply paginations, sorts and more complex select statements.
query = query
    .Skip(page * pageSize)
    .Take(pageSize);

List<SalesWithSalesPerson> result = await query.ToListAsync(ct)
```

We are preparing the query
For counting and pagination

Count in SQL Server

Pagination is done
on SQL Server

#5 Load test

```
> bombardier -c 5 -t 60s -d 60s -l https://localhost:5001/ExamplesPaginations/worstCase
Bombarding https://localhost:5001/ExamplesPaginations/worstCase for 1m0s using 5 connection(s)
[=========================================================================================
Done!
Statistics        Avg      Stdev        Max
  Reqs/sec         3.72     17.21     210.48
  Latency         1.35s   365.60ms      2.27s
```

```
> bombardier -c 5 -t 60s -d 60s -l https://localhost:5001/ExamplesPaginations/executedOnDB
Bombarding https://localhost:5001/ExamplesPaginations/executedOnDB for 1m0s using 5 connection(s)
[=========================================================================================
Done!
Statistics        Avg      Stdev        Max
  Reqs/sec        65.41     21.98     263.10
  Latency       76.94ms   13.79ms   237.05ms
```

~18x faster on average in a load test!

#6 Non-cancellable queries

- When query is running on SQL Server
  - It will run until completion
- Complex queries can stuff up SQL Server

#6 What’s the problem?

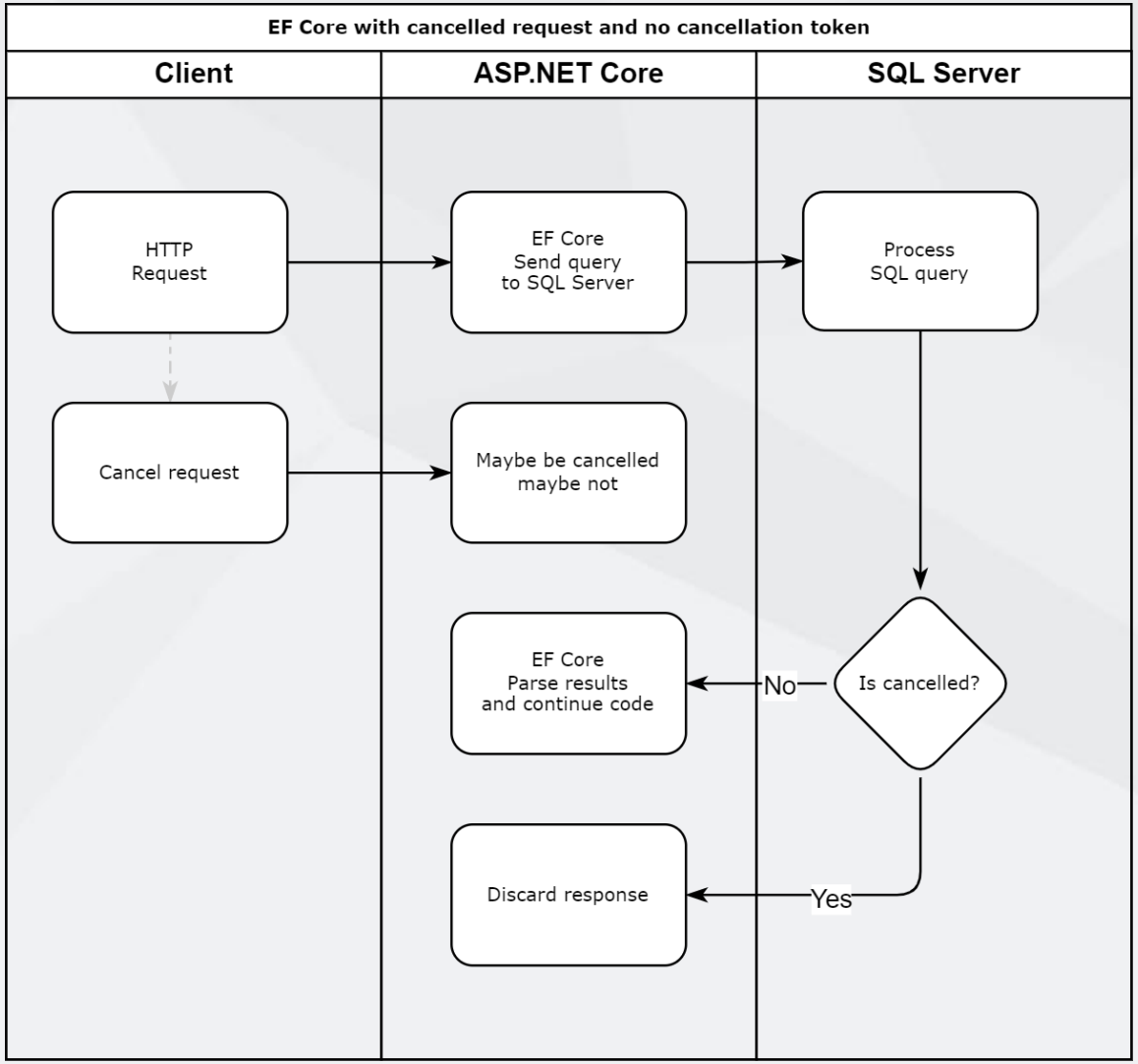

#6 Async and CancellationToken

Stop execution on the server when cancelled

```
[HttpGet("splitQuery")]
0 references | Jernej Kavka (JK), 65 days ago | 1 author, 1 change
public async Task<TestResult<int>> SplitQuery(CancellationToken ct)
{
    var query = _dbContext.Sales
        .AsNoTracking()
        .AsSplitQuery()
        .Where(x => x.SalesPersonId == 1)
        .Select(x => new SalesWithSalesPerson
        {
            CustomerId = x.CustomerId,
            SalesId = x.SalesPersonId,
            ProductId = x.ProductId,
            Quantity = x.Quantity,
            SalesPersonId = x.SalesPersonId,
            SalesPersonFirstName = x.SalesPerson.FirstName,
            SalesPersonLastName = x.SalesPerson.LastName
        });

    List<SalesWithSalesPerson> result = await query.TagWithContext().ToListAsync(ct);
```

#6 How it works cancellation token?

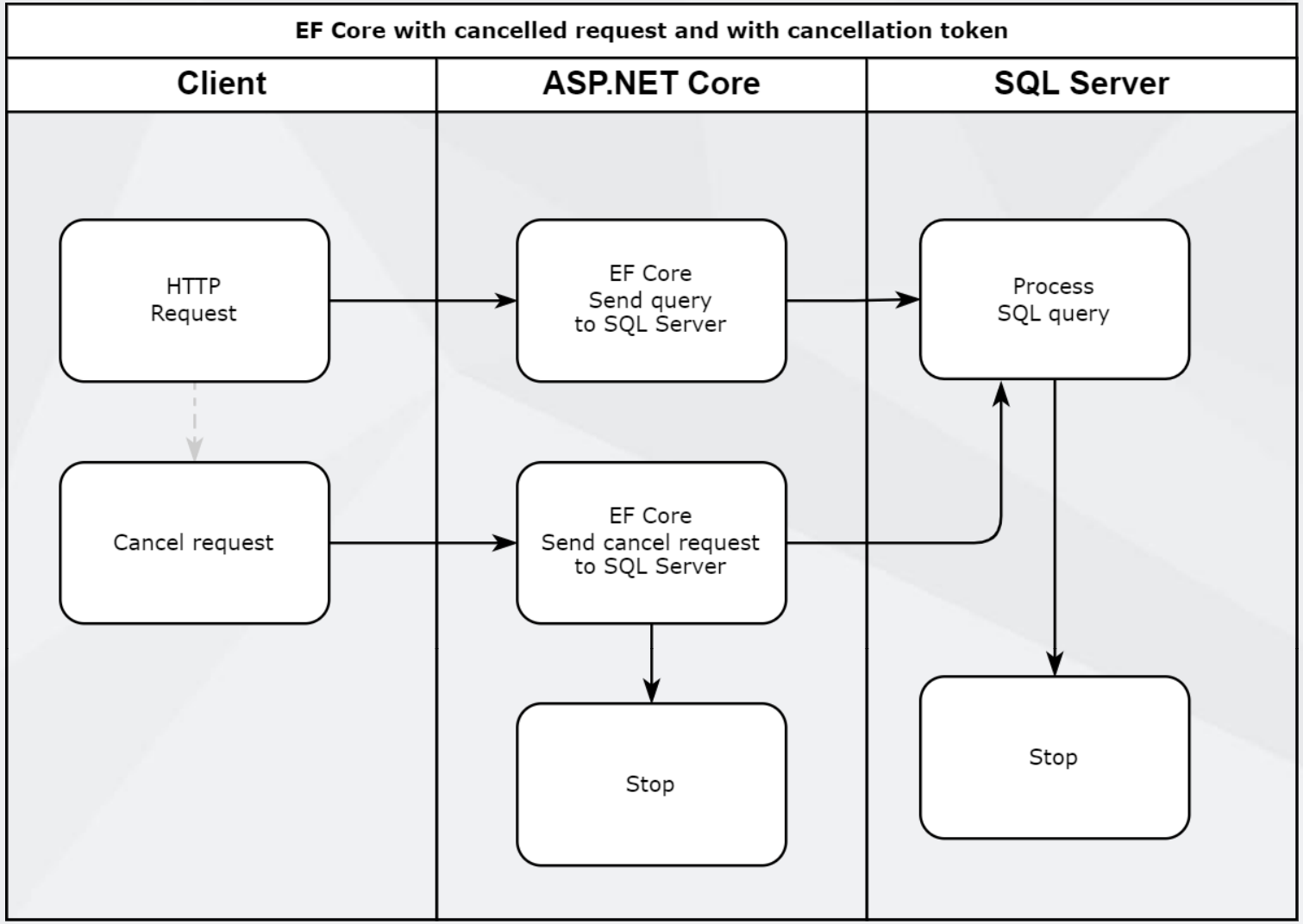

#6 Load test

```
> bombardier -c 12 -t 1s -d 60s -l https://localhost:5001/test/count
Bombarding https://localhost:5001/test/count for 1m0s using 12 connection(s)
[=========================================================================
Done!
Statistics        Avg      Stdev        Max
  Reqs/sec         1.64      28.10     666.49
  Latency        10.14s      2.83s     17.89s
```

```
> bombardier -c 12 -t 1s -d 60s -l https://localhost:5001/test/countasync-ct
Bombarding https://localhost:5001/test/countasync-ct for 1m0s using 12 connection(s)
[=========================================================================
Done!
Statistics        Avg      Stdev        Max
  Reqs/sec         2.04      32.15     631.45
  Latency         5.85s   368.77ms      7.26s
```

~2x faster on average in a load test!
Also, responsiveness returns **40 seconds** faster

#7 Inefficient update/delete #1

- Before EF7 we had to fetch data before could update
- Entities need to be tracking
- Can be very inefficient

#7 Inefficient update/delete #2

```
IQueryable<Employee> query = GetBaseQuery(isLoadFriendly);
var employees = query.ToList();
foreach (var employee in employees)
{
    string firstName = employee.FirstName;
    employee.FirstName = employee.LastName;
    employee.LastName = firstName;
}

_dbContext.SaveChangesAsync();
```

```
-- Get all employees that we want to swap first and last name.
-- We need to fetch all columns as it needs to be tracking!

SELECT TOP(@__p_0) [e].[EmployeeID], [e].[FirstName], [e].[LastName], [e].[MiddleInitial]
FROM [Employees] AS [e]

SET NOCOUNT ON;
UPDATE [Employees] SET [FirstName] = @p0, [LastName]    @p1
OUTPUT 1
WHERE [EmployeeID] = @p2;

-- Lots of updates...
UPDATE [Employees] SET [FirstName] = @p63, [LastName]    @p64
OUTPUT 1
WHERE [EmployeeID] = @p65;
UPDATE [Employees] SET [FirstName] = @p66, [LastName]    @p67
OUTPUT 1
WHERE [EmployeeID] = @p68;
```

#7 Inefficient update/delete #3

```
IQueryable<Employee> query = GetBaseQuery(isLoadFriendly);
var employees = query
    .TagWith("Swap first and last name")
    .ExecuteUpdate(x => x
        .SetProperty(p => p.FirstName, b => b.LastName)
        .SetProperty(p => p.LastName, b => b.FirstName));

_dbContext.SaveChangesAsync();
```

```
-- Swap first and last name

UPDATE [e]
SET [e].[LastName] = [e].[FirstName],
  [e].[FirstName] = [e].[LastName]
FROM [Employees] AS [e]
```

#7 Inefficient update/delete #4

```
~#@> bombardier -c 12 -t 1s -d 60s -l https://localhost:5001/ExamplesUpdate/worstCase
Bombarding https://localhost:5001/ExamplesUpdate/worstCase for 1m0s using 12 connection(s)
[=========================================================================================
Done!
Statistics        Avg      Stdev        Max
  Reqs/sec      524.96     478.57    3168.91
  Latency       22.87ms    54.64ms      1.28s
```

```
~#@> bombardier -c 12 -t 1s -d 60s -l https://localhost:5001/ExamplesUpdate/updateQuery
Bombarding https://localhost:5001/ExamplesUpdate/updateQuery for 1m0s using 12 connection(s)
[=========================================================================================
Done!
Statistics        Avg      Stdev        Max
  Reqs/sec     1659.20     479.76    2781.09
  Latency       7.23ms    26.63ms      1.66s
```

For only 23 records, it's still ~3x faster!
Performance improvements can be massive depending on the query!

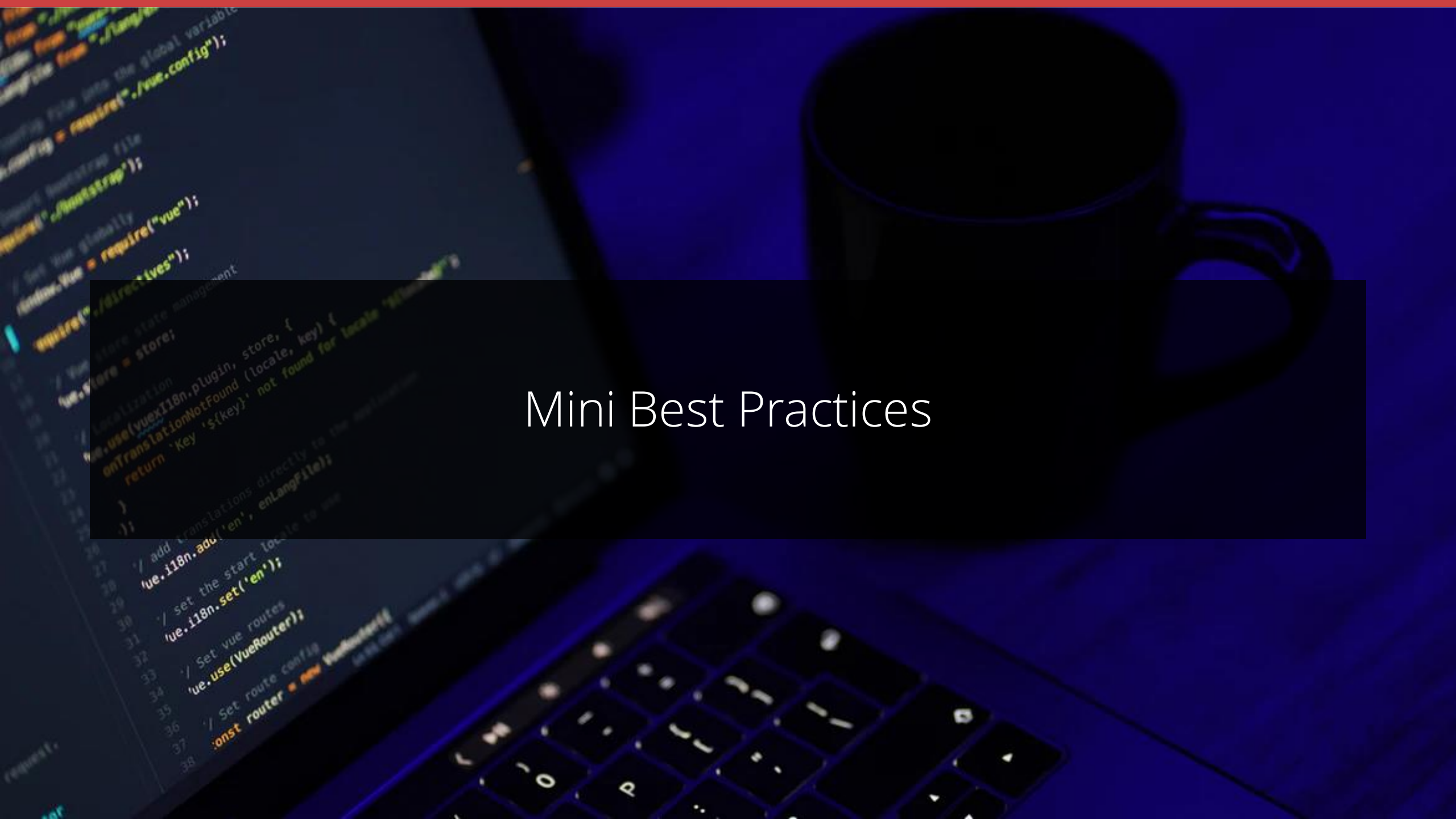

Mini Best Practices

Bonus #1 - Other things I have seen

```
0 references | 0 changes | 0 authors, 0 changes
public bool HasAny()
{
    var employees = _dbContext.Employees
        .Where(x => x.EmployeeId == 1)
        .ToList();
    return employees.Count > 0;
}
```

```
0 references | 0 changes | 0 authors, 0 changes
public bool HasAny()
{
    return _dbContext.Employees
        .Any(x => x.EmployeeId == 1);
}
```

```
0 references | 0 changes | 0 authors, 0 changes
public List<SaleModel> GetSales(int? saleId)
{
    var sales = _dbContext.Sales
        .Include(x => x.Product)
        ToList();

    if (saleId != null)
    {
        sales = sales
            .Where(x => x.SalesId == saleId.Value)
            .ToList();
    }

    return sales.Select(x => new SaleModel
    {
        SaleId = x.SalesId,
        Quantity = x.Quantity,
        ProductName = x.Product.Name
    }).ToList();
}
```

```
0 references | 0 changes | 0 authors, 0 changes
public List<SaleModel> GetSales(int? saleId)
{
    IQueryable<Sale> salesQuery = _dbContext.Sales;

    if (saleId != null)
    {
        salesQuery = salesQuery
            .Where(x => x.SalesId == saleId.Value);
    }

    return salesQuery.Select(x => new SaleModel
    {
        SaleId = x.SalesId,
        Quantity = x.Quantity,
        ProductName = x.Product.Name
    }).ToList();
}
```

Bonus #2

`DbContextPool`

- Reuses existing **`DbContext`**
- Fewer connections to SQL Server
- Improves resiliency

```
services.AddDbContextPool<SalesDbContext>(options =>
{
    options.UseSqlServer(Configuration.GetConnectionString("SalesDB"));
});
```

Bonus #3

TagWith

Adds comments into SQL query for easier debugging

```
var list = await _context.Tweets
    .TagWith("GetTweets")
    .ToListAsync(cancellationToken)
    .ConfigureAwait(false);
```

```
-- GetTweets

SELECT [t].[Id], [t].[CreatedUtc], [t].[Message], [t].[Username]
FROM [Tweets] AS [t]
```

Bonus #4 – ChatGPT

ChatGPT PLUS

You're an EF Core expert and clean code developer.
<user's instructions>
DbContext:
<Optional project's DbContext, can be trimmed to include only the relevant parts>
Entities:
<Only necessary entities>
Return types:
<Optional return type we want to map>

ChatGPT may produce inaccurate information about people, places, or facts. ChatGPT May 12 Version

Bonus #4 – ChatGPT

Model: GPT-4

You're an EF Core expert and clean code developer.

Get all employees details, for each get statistics on how many produ
they earned and a list of sales they did, all paginated.

DbContext:

```
public partial class SalesDbContext : DbContext
{
  public SalesDbContext(DbContextOptions<SalesDbContext> opt
    : base(options)
  {
  }

  public virtual DbSet<Customer> Customers { get; set; }
```

```
public async Task<List<EmployerStats>> GetEmployeeStats(int pageNumber,
{
    return await _context.Employees
        .OrderBy(e => e.EmployeeId)
        .Skip((pageNumber - 1) * pageSize)
        .Take(pageSize)
        .Select(e => new EmployerStats
        {
            FirstName = e.FirstName,
            LastName = e.LastName,
            TotalProductSold = e.Sales.Count,
            TotalSales = e.Sales.Sum(s => s.Quantity * s.Product.Price),
            TotalQuantity = e.Sales.Sum(s => s.Quantity),
            Sales = e.Sales.Select(s => new SaleModel
            {
                SaleId = s.SalesId,
                ProductName = s.Product.Name,
                Quantity = s.Quantity
            })
        })
        .ToListAsync();
}
```

Before we end #1

When is something not premature optimization?

- Following best practices for given scenario
- When high-load is expected
  - Talk to Product Owner and make it part of acceptance criteria
- When it already causes performance issues
  - Talk to Product Owner and make it part of acceptance criteria or create tech debt PBI/issue and mention it in the code
  - ssw.com.au/rules/technical-debt/

Before we end #2

What should you not do?

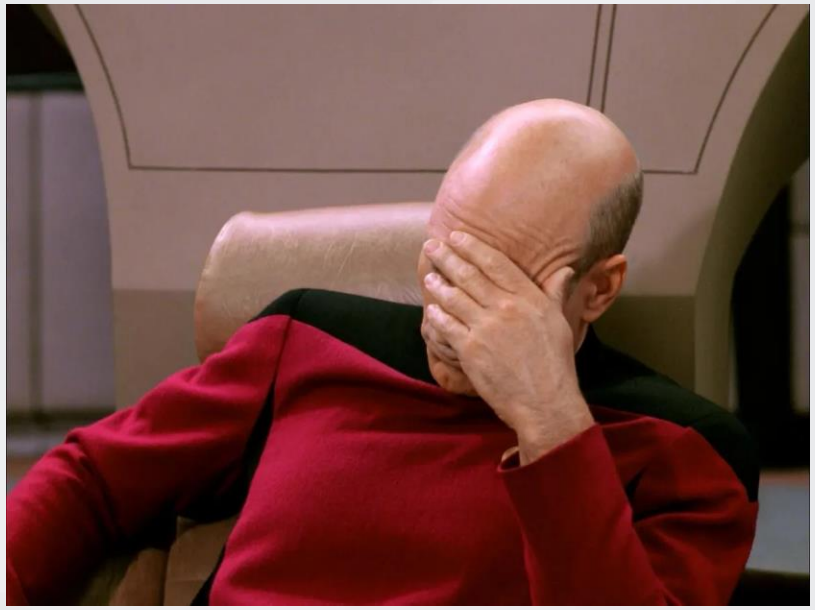

- ✖ “We’ll fix it later” with no actions
  - ℹ Create a tech debt PBI/issue and a link to it in code as a TODO comment
  - 🌐 ssw.com.au/rules/technical-debt/
- ✖ “Premature optimization” as an excuse for bad code
  - ℹ There are valid reason to not optimize your code, bad code is not one of them!

Resources

Source code for examples and benchmarking

github.com/jernejk/EFCoreSamples.StabilityAndPerformance

Microsoft resources for better EF Core performance

docs.microsoft.com/en-us/ef/core/performance/

Rules to Better Entity Framework

ssw.com.au/rules/rules-to-better-entity-framework

Rules to Better LINQ

ssw.com.au/rules/rules-to-better-linq

Nick Chapsas YouTube – Great breakdowns of features and best practices

youtube.com/watch?v=Q4LtKa_HTHU

Key takeaways 🗝

- `IEnumerable` is dangerous when used with EF Core
- `AsNoTracking` has massive performance impact
  - Make sure you don't need to update/delete the entities
- Simpler code can result in better performance

Find this presentation on GitHub!

github.com/sswconsulting/presentations

Thank you!

info@ssw.com.au

www.ssw.com.au

Sydney | Melbourne | Brisbane

Questions?

info@ssw.com.au

www.ssw.com.au

Sydney | Melbourne | Brisbane