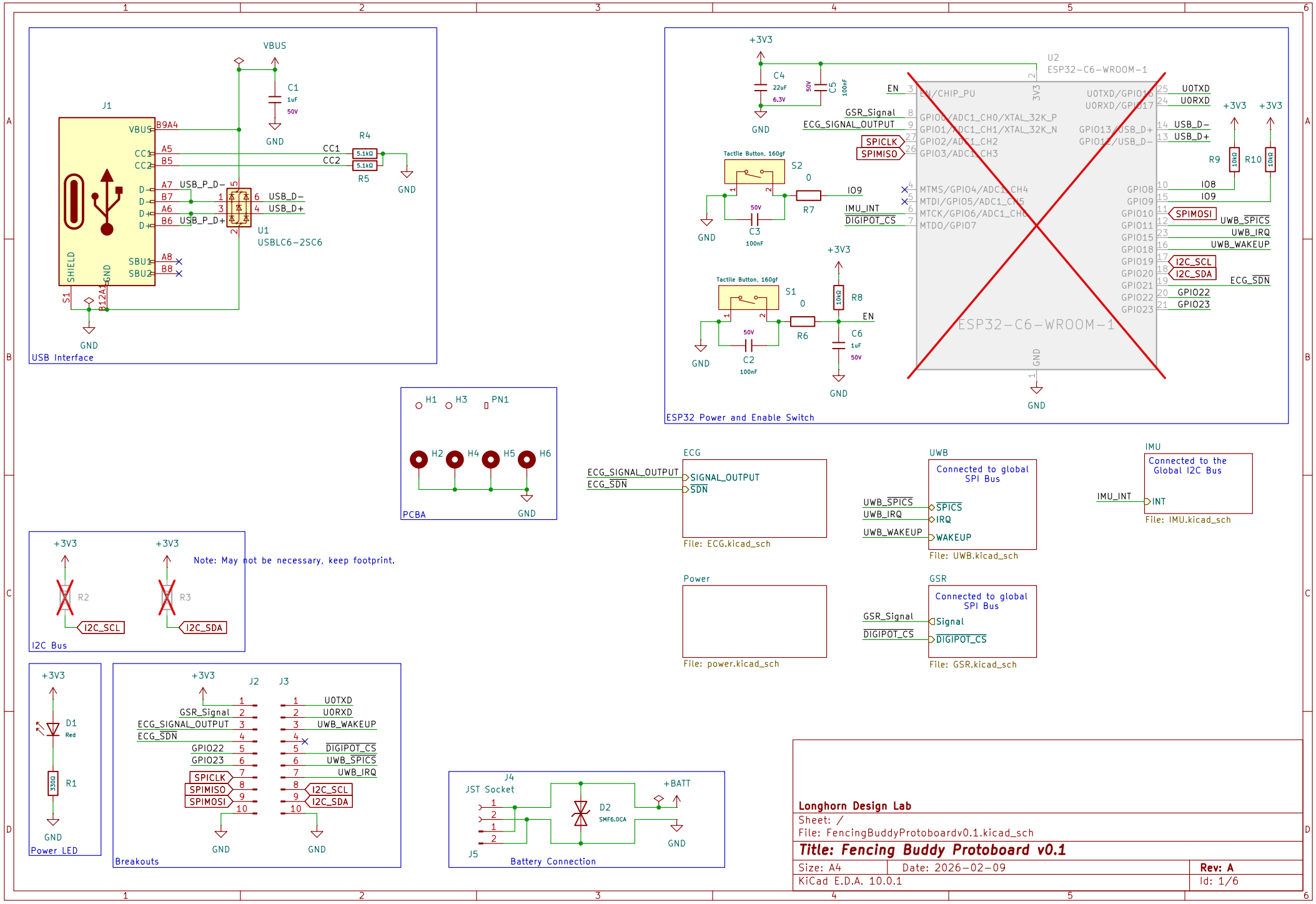
USB Interface
J1
VBUS
C1
1uF
50V
GND
CC1
CC2
R4
R5
5.1kΩ
USB_P_D−
USB_P_D+
USB_D−
USB_D+
U1
USBLC6−2SC6
SHIELD
S1
ESP32 Power and Enable Switch
+3V3
C4
22uF
6.3V
C5
100nF
U2
ESP32−C6−WROOM−1
EN
GSR_Signal
ECG_SIGNAL_OUTPUT
SPICLK
SPIMISO
Tactile Button, 160gf
S2
R7
IO9
IMU_INT
DIGIPOT_CS
C3
S1
R8
10kΩ
R6
C6
C2
U0TXD
U0RXD
USB_D−
USB_D+
R9
R10
IO8
SPIMOSI
UWB_SPICS
UWB_IRQ
UWB_WAKEUP
I2C_SCL
I2C_SDA
ECG_SDN
GPIO22
GPIO23
ESP32−C6−WROOM−1
PCBA
H1
H3
PN1
H2
H4
H5
H6
ECG
ECG_SIGNAL_OUTPUT
ECG_SDN
SIGNAL_OUTPUT
SDN
File: ECG.kicad_sch
UWB
Connected to global SPI Bus
UWB_SPICS
UWB_IRQ
UWB_WAKEUP
SPICS
IRQ
WAKEUP
File: UWB.kicad_sch
IMU
Connected to the Global I2C Bus
IMU_INT
INT
File: IMU.kicad_sch
I2C Bus
Note: May not be necessary, keep footprint.
R2
R3
Power
File: power.kicad_sch
GSR
Connected to global SPI Bus
GSR_Signal
DIGIPOT_CS
Signal
File: GSR.kicad_sch
Power LED
D1
Red
R1
330Ω
Breakouts
J2
J3
GPIO22
GPIO23
Battery Connection
J4
JST Socket
J5
D2
SMF6.0CA
+BATT
Longhorn Design Lab
Sheet: /
File: FencingBuddyProtoboardv0.1.kicad_sch
Title: Fencing Buddy Protoboard v0.1
Size: A4
Date: 2026−02−09
Rev: A
KiCad E.D.A. 10.0.1
Id: 1/6

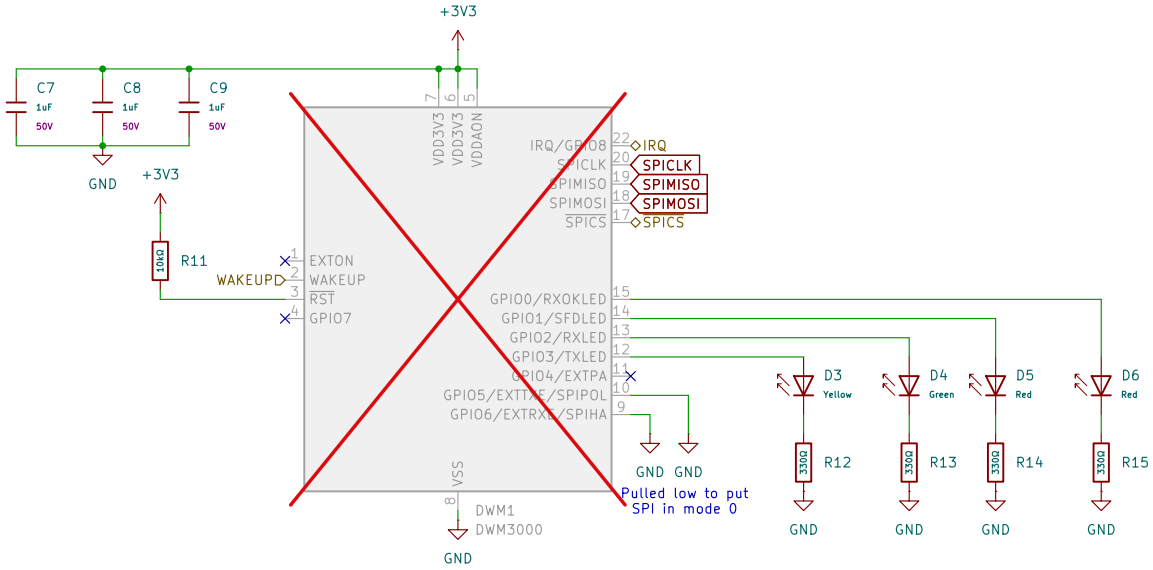

Longhorn Design Lab

Sheet: /UWB/
File: UWB.kicad_sch

Title: Fencing Buddy Protoboard v0.1

Size: A4	Date: 2026-02-09	**Rev: A**
KiCad E.D.A. 10.0.1		Id: 2/6

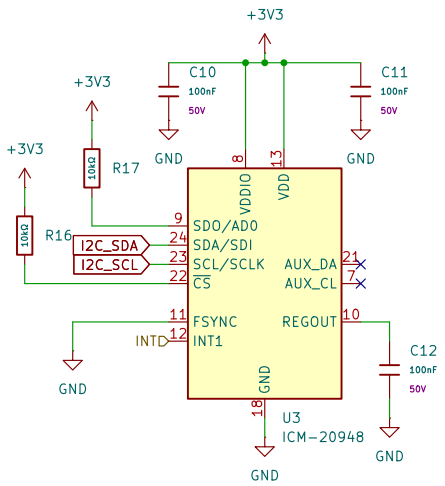

Longhorn Design Lab

Sheet: /IMU/
File: IMU.kicad_sch

Title: Fencing Buddy Protoboard v0.1

Size: A4	Date: 2026-02-09	**Rev: A**
KiCad E.D.A. 10.0.1		Id: 3/6

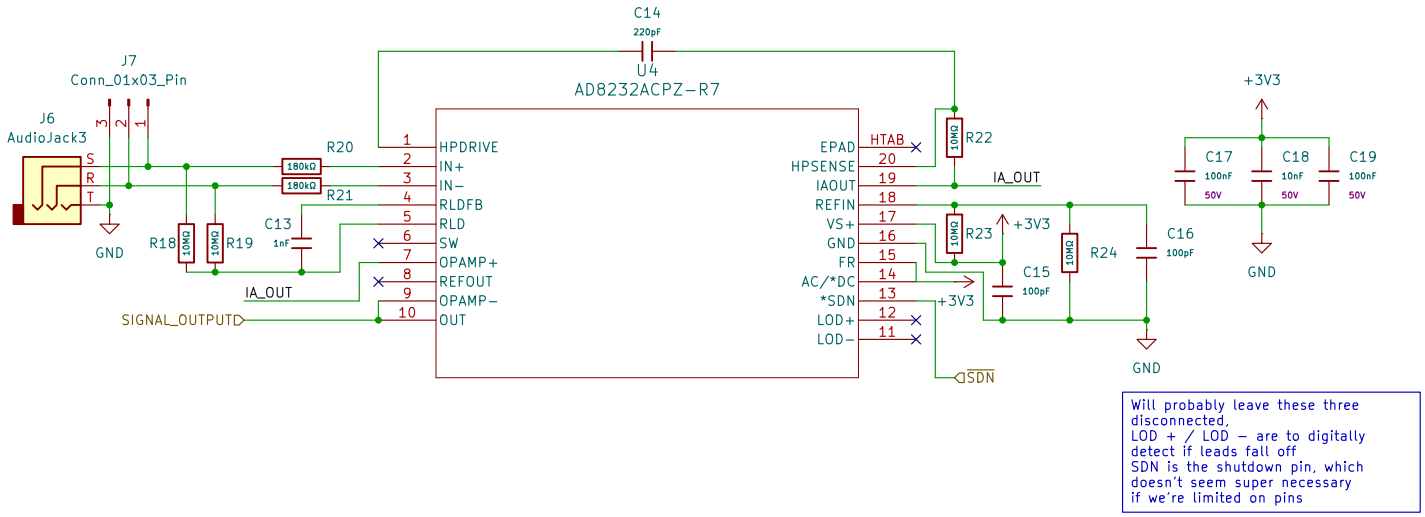

Will probably leave these three disconnected,
LOD + / LOD − are to digitally detect if leads fall off
SDN is the shutdown pin, which doesn't seem super necessary if we're limited on pins

Longhorn Design Lab

Sheet: /ECG/
File: ECG.kicad_sch

Title: Fencing Buddy Protoboard v0.1

Size: A4	Date: 2026-02-09	**Rev: A**
KiCad E.D.A. 10.0.1		Id: 4/6

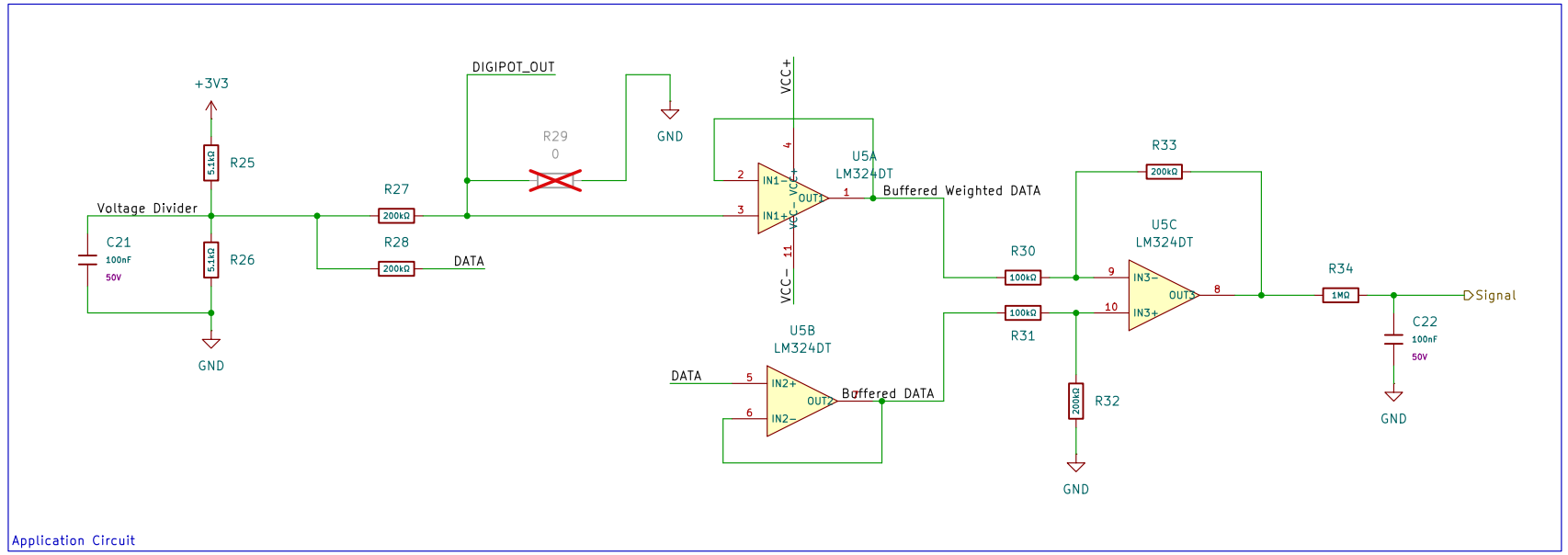

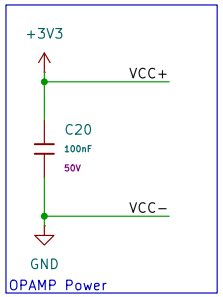

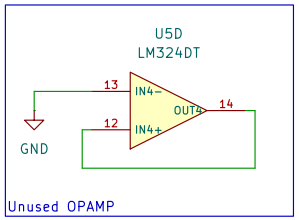

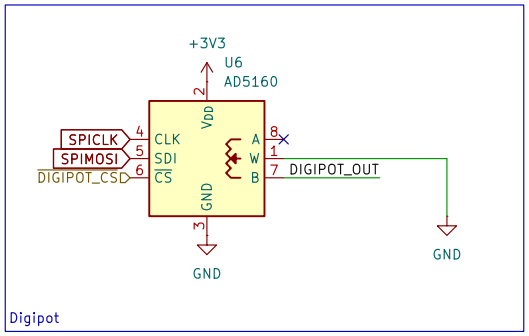

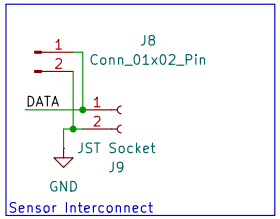

Longhorn Design Lab

Sheet: /GSR/
File: GSR.kicad_sch

Title: Fencing Buddy Protoboard v0.1

Size: A4	Date: 2026-02-09	**Rev: A**
KiCad E.D.A. 10.0.1		Id: 5/6

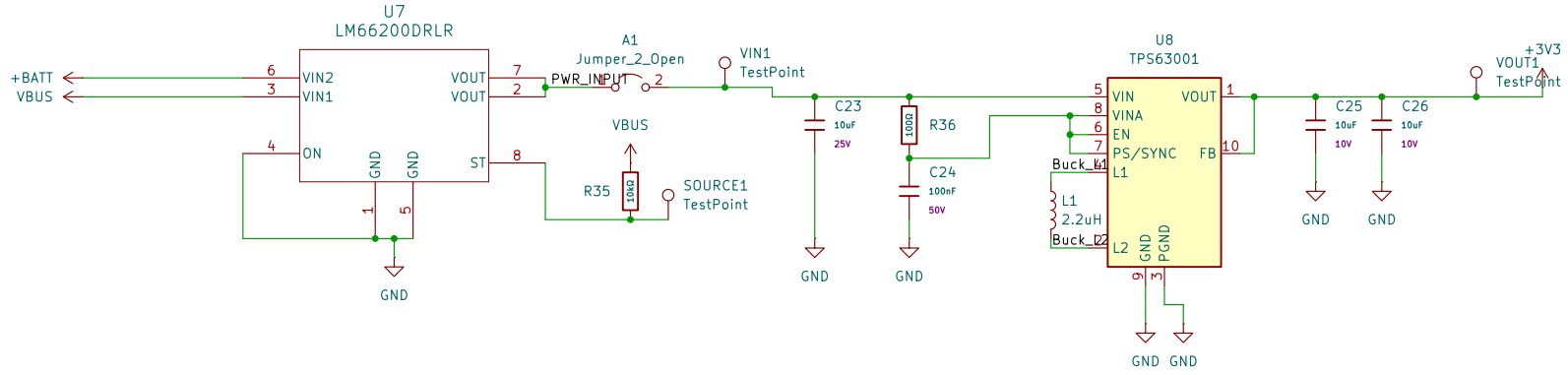

Longhorn Design Lab

Sheet: /Power/
File: power.kicad_sch

Title: Fencing Buddy Protoboard v0.1

Size: A4	Date: 2026-02-09	**Rev: A**
KiCad E.D.A. 10.0.1		Id: 6/6