PC104 Headers

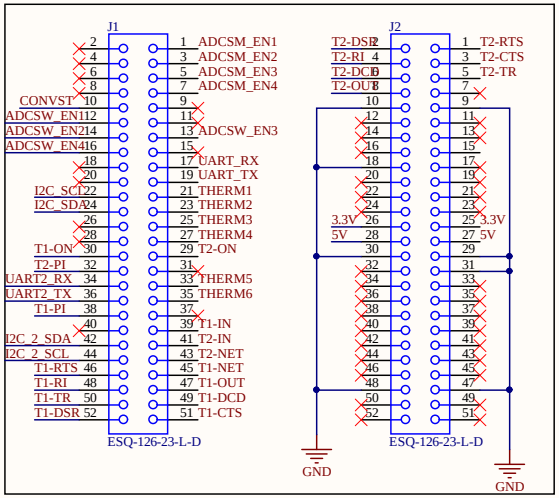

BeagleBone Headers

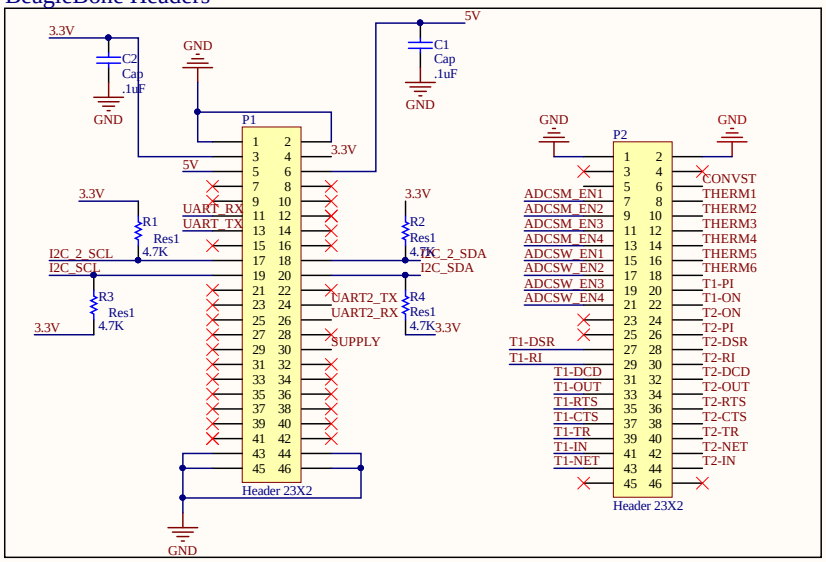

RTC

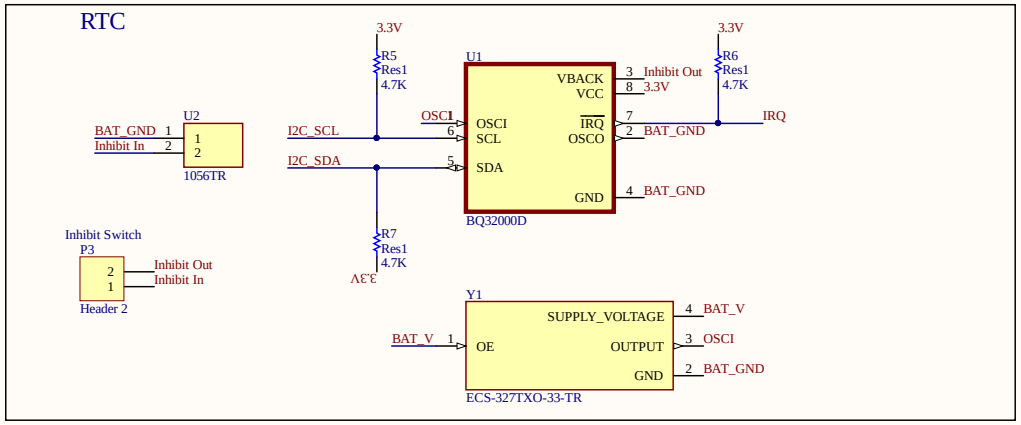

Title	BeagleBone		Altium Limited L3, 12a Rodborough Rd Frenchs Forest NSW Australia 2086
Size: Legal	Number:	Revision:	
Date: 2/1/2021	Time: 4:41:56 PM	Sheet of	
File: D:\D3 Board Altium Files\PATCOOL BeagleBone\PATCOOL_BeagleBone\PATCOOL_Schematic.SchDoc			