Date	SYM	REVISION RECORD	AUTH	DR.	CK.
5/20/06	A	ADDED PCB LAYOUT ADDED "ROHS COMPLIANT"	T.B.	B.S.	
12/02/06	B	ADDED DIM. 3.25	T.B.	B.S.	
2/17/07	C	UPDATED TITLE	T.B.	B.S.	
4/16/10	D	ADDED CENTER DIST. 7.50 ADDED DIM. Ø0.90 ADDED DIM. Ø1.20	T.B.	B.S.	

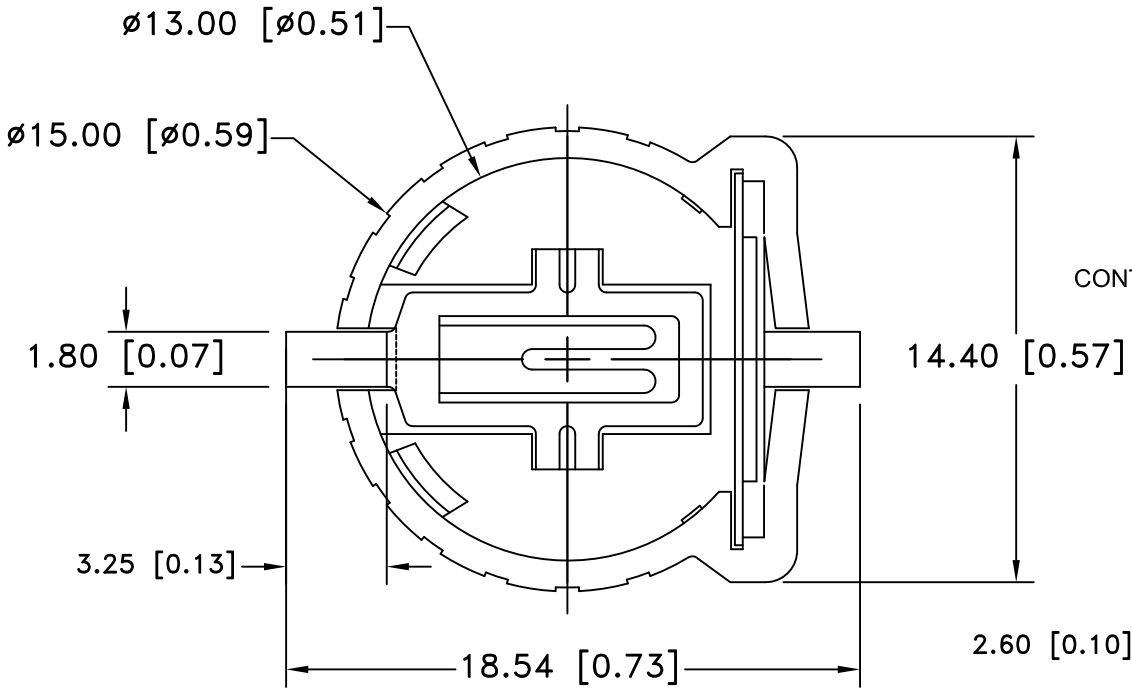

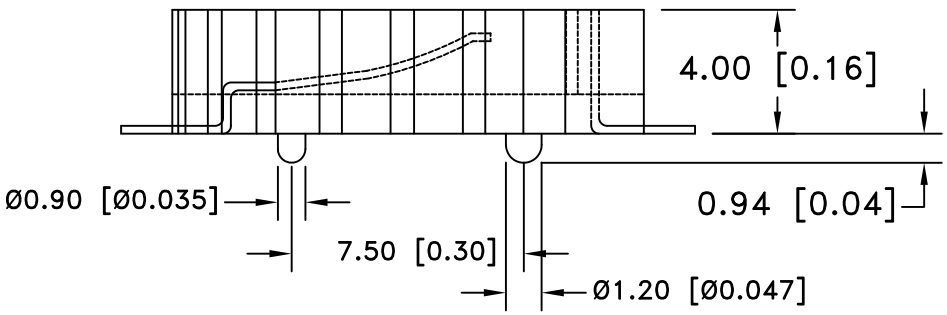

PCB LAYOUT

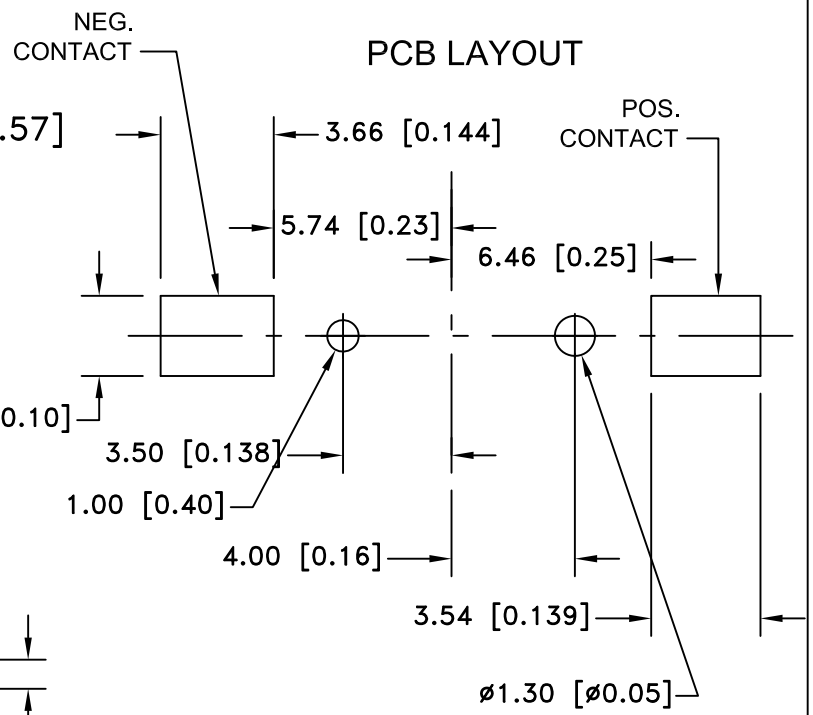

NOTES:

1. MATERIAL:
   HOUSING: GLASS FILLED PPS, UL94V-0, BROWN
   TERMINAL: 0.20mm [0.008] PHOSPHOR BRONZE, GOLD PLATED OVER NICKEL
2. INSULATION RESISTANCE: 1000MΩ MIN
3. CONTACT RESISTANCE: 20MΩ MAX.
4. DIELECTRIC WITHSTANDING: AC 500V
5. OPERATING TEMPERATURE: -40°C TO +85°C
6. ROHS COMPLIANT

Tolerance (Except as noted)	Memory Protection Devices, Inc 200 Broad Hollow Road, Farmingdale, New York 11735		
decimal ±.25 (.010)		Scale	Drawn By B.S. Approved By T.B.
Fractional ± .8 (.030)	Title COIN CELL HOLDER FOR CR1220		
Angular + 2° − 1°	Date 4/16/10	Drawing Number BC501SM	