＊ 所有原料材质,生产制程,电镀必须符合ROHS要求

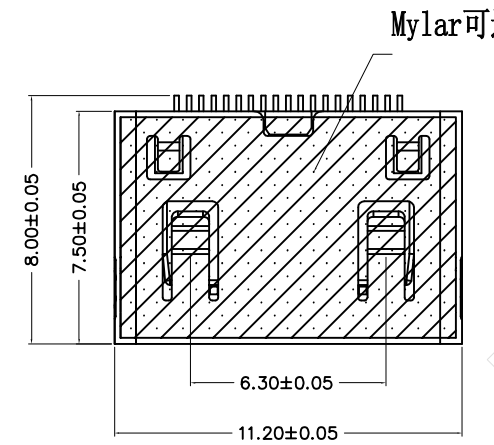

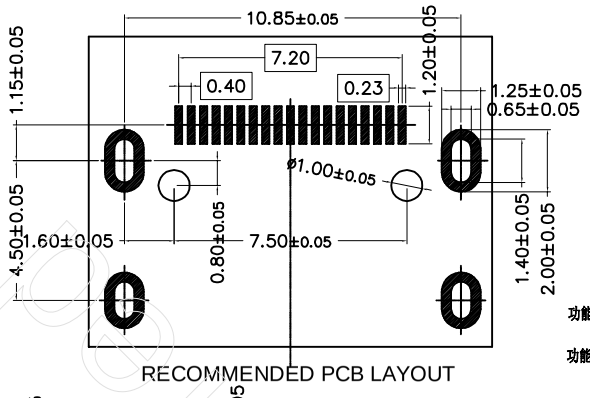

RECOMMENDED PCB LAYOUT

PART NO.

002 1 * A A * 19 *

流水码

A=DIP型外壳
B=SMT型外壳
C=DIP型外壳表面有J&K LOGO
D=DIP型外壳,表面有Mylar

Q= 外壳全部镀金1U".
R= 外壳100μ"可焊性鎳Ni.

功能區域镀金1u" 焊接腳純亮錫100u"(符合ROHS製程) A=
功能區域镀金3u" 焊接腳純亮錫100u"(符合ROHS製程) B=
功能區鍍金1u",錫腳镀金1u"(符合ROHS製程) G=
功能區鍍金3u",錫腳镀金1u"(符合ROHS製程) H=
功能區鍍金15u",錫腳镀金1u"(符合ROHS製程) K=

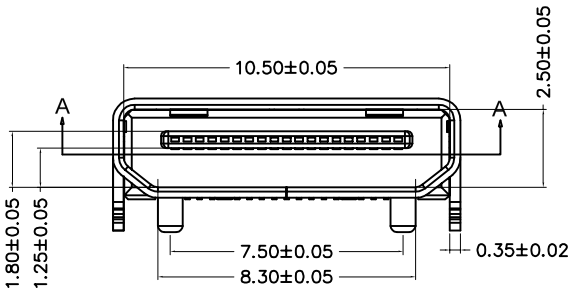

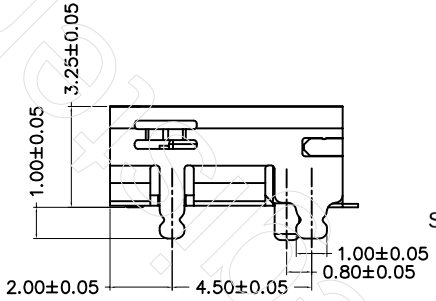

SPECIFICATION:
1.MATING FORCE:44.1N MAX
2.UNMATING FORCE:7-25N
3.DURABILITY: 5000 CYCLES MIN
4.CURRENT:0.5A
5.VOLTAGE:40V MAX
6.WITHSTANDING VOLTAGE:500V AC MIN.(UNMATED)
7.CONTACT RESISTANCE:30MN MAX.
8.INSULATION RESISTANCE:100MN MIN.(UNMATED)
9.OPERATING TEMPERATURE RANGE:-20.C TO +85.C
10.ALL THE MATERIAL SHOULD COMPLY WITH THE ROHS REQUIREMENT.

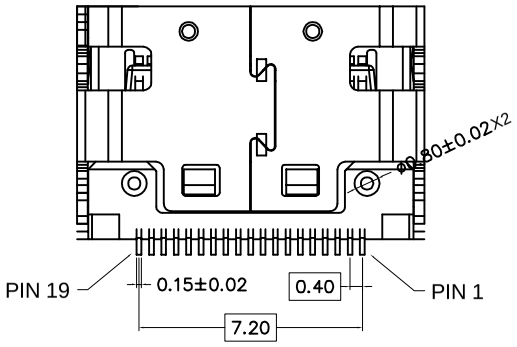

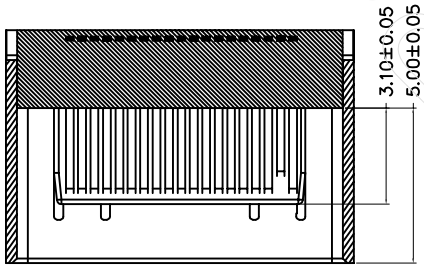

SEC A-A
SCALE 1:1

REVISION NO.	ECR NO.	DESCRIPTION	MARK	DATE

DIMENSIONS INIT: mm
UNLESS OTHERWISE SPECIFIABLE

DIMENSION	TOLERANCE
X.X: ±	0.25
X.XX: ±	0.10
X.XXX: ±	0.05
ANGULAR: ±	1°

PRODUCT NAME : MiNi-HDMI 19Pin C TYPE	DRAWING: COCO	DATE: 2008/12/10	
PRODUCT NO. : HDMI-001-001	CHECK: JANY	DATE: 2008/12/10	
DRAWING NO. : NT-003	APPROVED: JEFF	DATE: 2008/12/10	
	SCALE: 1:1	DWG ID: P D	REV.: A	PAGE: 1 OF 2