KIT_PSE84_AI - PSOC™ Edge E84 AI Board

CONTENTS

PAGE	DESCRIPTION
01	Title, Table of Contents & Drawing Numbers
02	Function Block Diagram
03	Power Block Diagram
04	USB and Battery Power Supply Inputs
05	Power supply OR'ing and USB-C Port Controller
06	Regulated Voltage Supply section
07	KitProg3 Interface
08	On-board Peripherals
09	On board Sensors
10	RADAR Sensor Interface
11	2YF WiFi / BLE Module Interface
12	IO Expansion connectors
13	Flash Memory and RAM Interface
14	Audio Class-D Amplifier Interface
15	Analog Microphones Interface
16	MIPI-DSI Display Interface
17	PSOC™ Edge E84 Power1
18	PSOC™ Edge E84 Power2
19	PSOC™ Edge E84 I/O Signals
20	Accessories
21	Revision History

Drawing Numbers

PCBA	121-60751-01
PCB	600-60751-01
FAB DRW	610-60751-01
ASSY DRW	620-60751-01
SCH DRW	630-60751-01

Legal Disclaimer :
The information given in this document shall in no event be regarded as a guarantee of conditions or characteristics. With respect to any examples or hints given herein, any typical values stated herein and/or any information regarding the application of the device, Infineon Technologies hereby disclaims any and all warranties and liabilities of any kind, including without limitation, warranties of non-infringement of intellectual property rights of any third party.

SCH Title : PSOC™ Edge E84 AI Board				
Page Title: Title Page				
Size	Document Number	Drawn By	Approved By	Rev
A4	630-60751-01	Vamsi	Ronak	03
Date: Monday, June 02, 2025		Sheet 1 of 21		

Functional Block Diagram

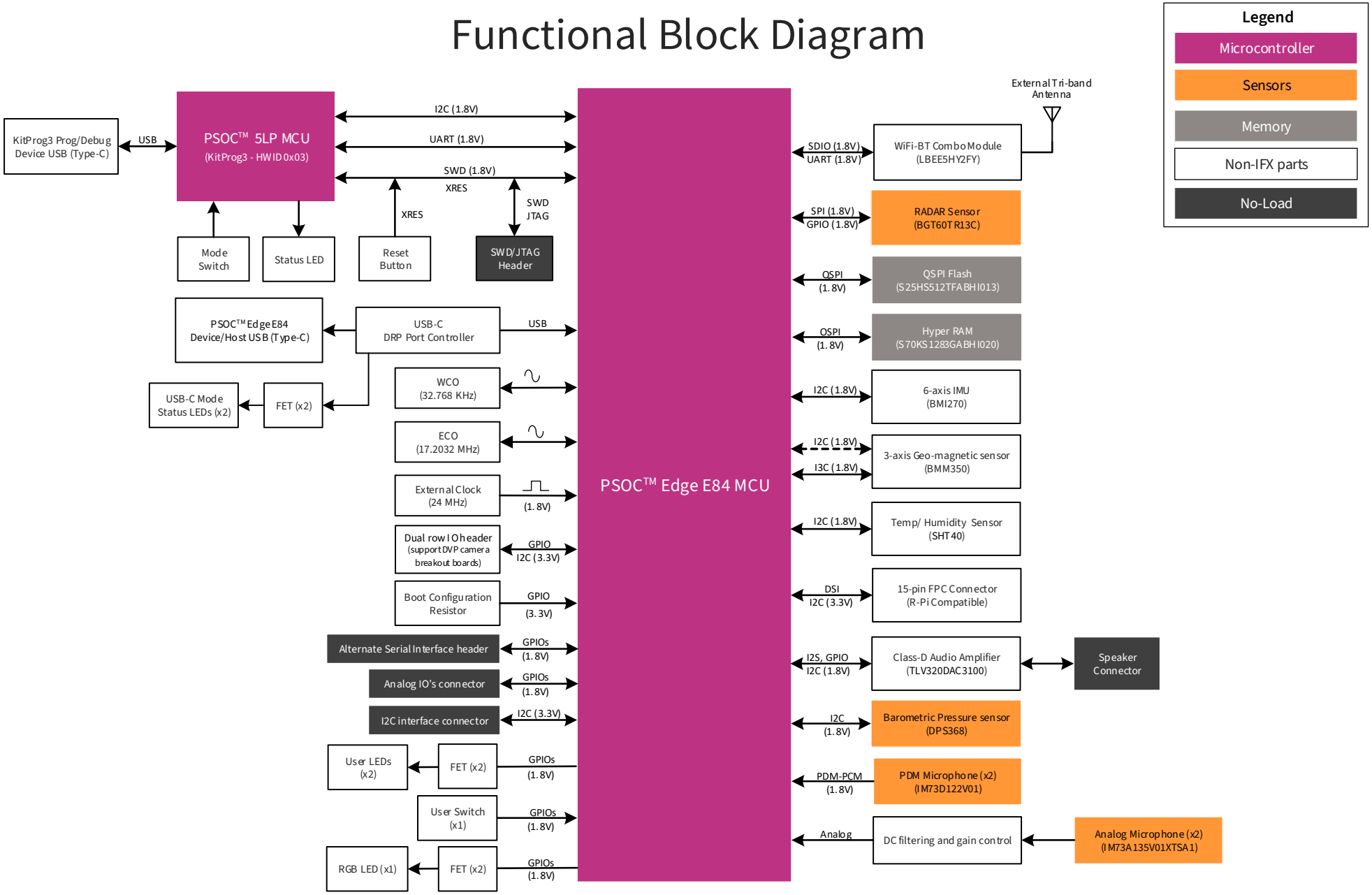

Legal Disclaimer :
The information given in this document shall in no event be regarded as a guarantee of conditions or characteristics. With respect to any examples or hints given herein, any typical values stated herein and/or any information regarding the application of the device, Infineon Technologies hereby disclaims any and all warranties and liabilities of any kind, including without limitation, warranties of non-infringement of intellectual property rights of any third party.

SCH Title : PSOC™ Edge E84 AI Board				
Page Title: Functional Block Diagram				
Size	Document Number	Drawn By	Approved By	Rev
A4	630-60751-01	Vamsi	Ronak	03
Date: Thursday, February 19, 2026			Sheet 2 of 21	

Power Block Diagram

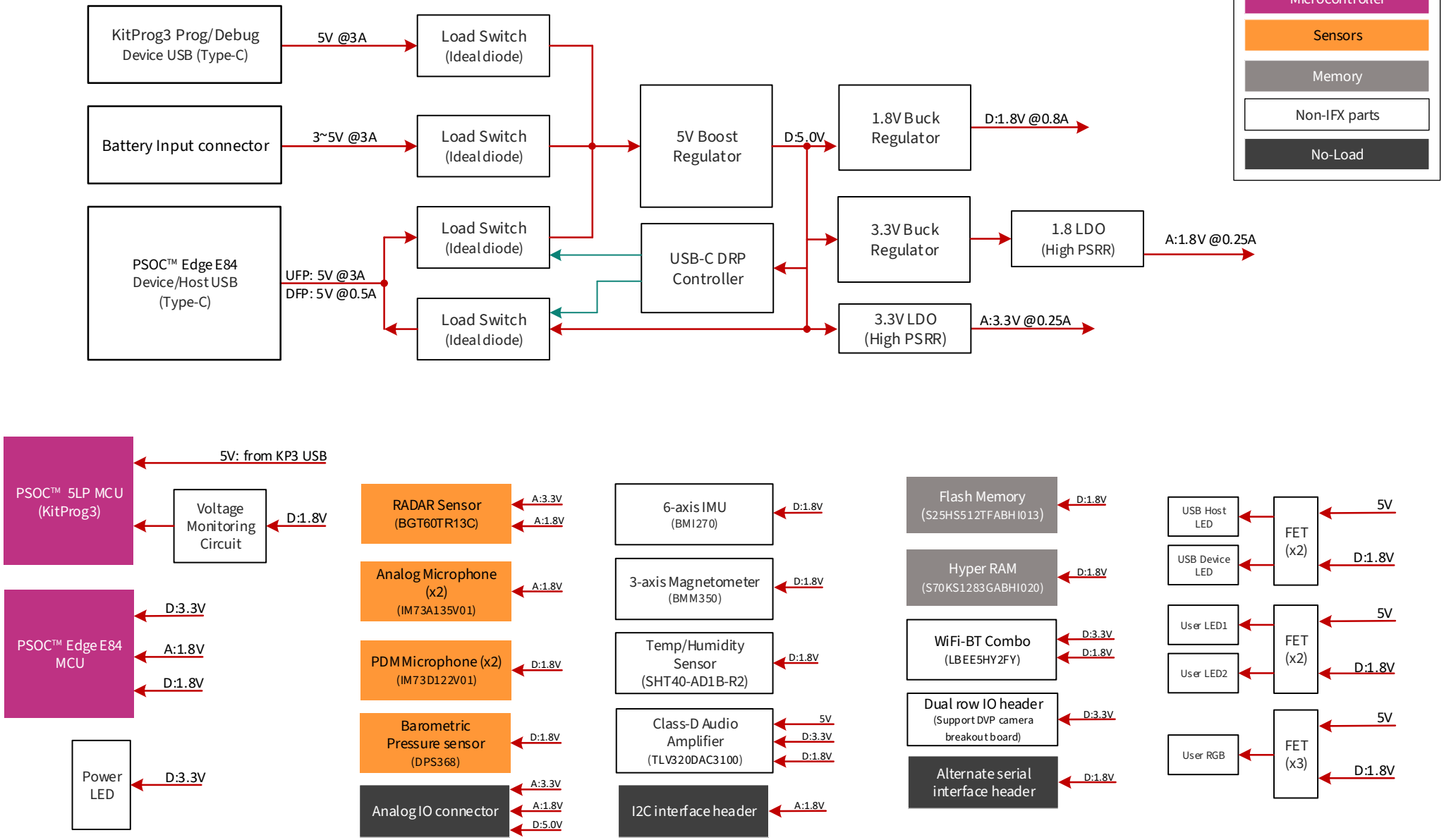

Legal Disclaimer :
The information given in this document shall in no event be regarded as a guarantee of conditions or characteristics. With respect to any examples or hints given herein, any typical values stated herein and/or any information regarding the application of the device, Infineon Technologies hereby disclaims any and all warranties and liabilities of any kind, including without limitation, warranties of non-infringement of intellectual property rights of any third party.

SCH Title : PSOC™ Edge E84 AI Board				
Page Title: Power Block Diagram				
Size	Document Number	Drawn By	Approved By	Rev
A4	630-60751-01	Vamsi	Ronak	03
Date: Thursday, February 19, 2026			Sheet 3 of 21	

KitProg3 USB Interface and Power Supply

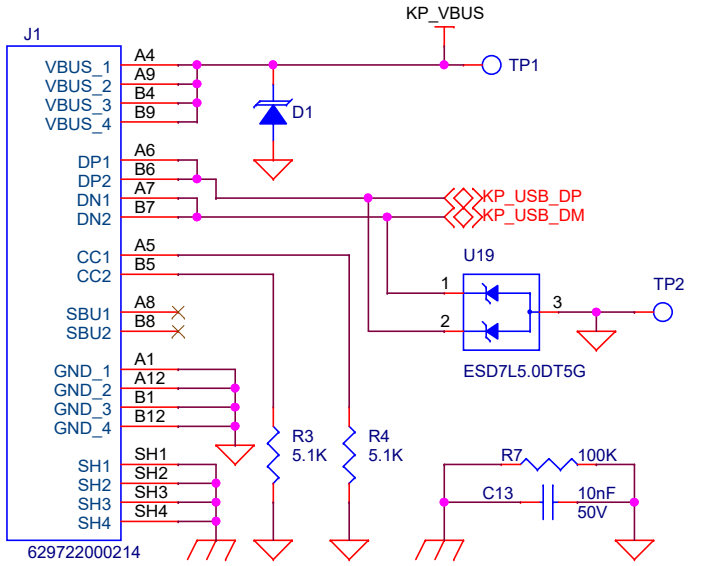

PSOC™ Edge E84 USB Device/Host Interface

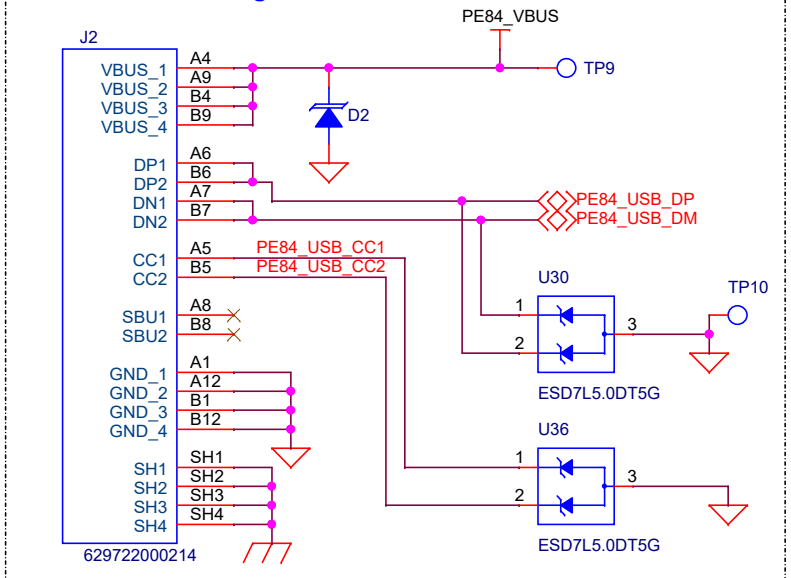

Battery input Connector

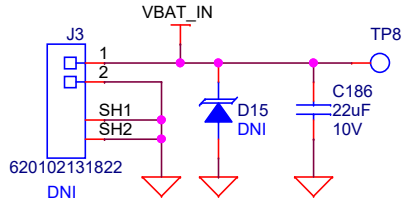

Power LED

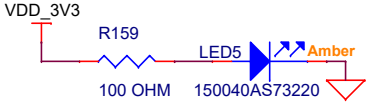

USB-C DRP controller

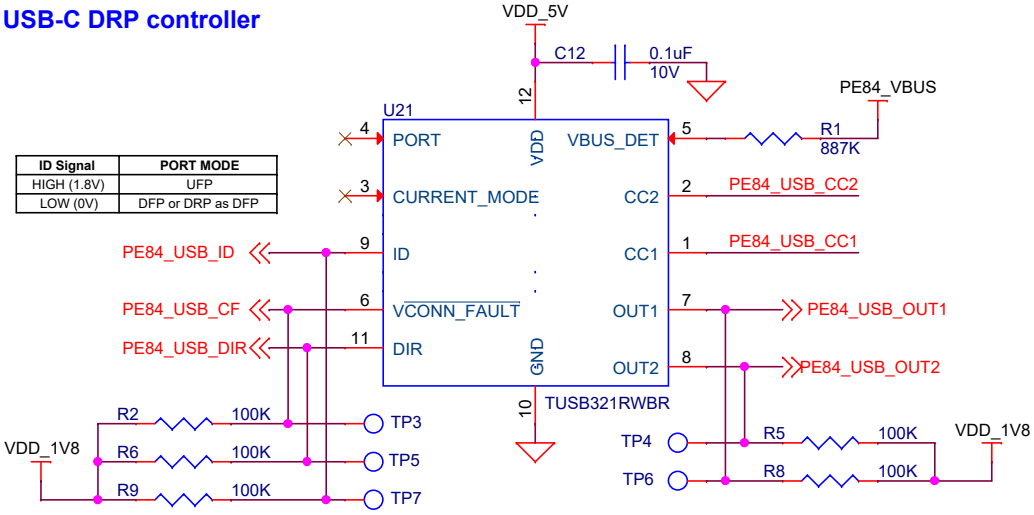

ID Signal	PORT MODE
HIGH (1.8V)	UFP
LOW (0V)	DFP or DRP as DFP

NOTE: Type-C current is in default value (500mA) in DFP port mode as CURRENT_MODE pin left un-connected

Legal Disclaimer :
The information given in this document shall in no event be regarded as a guarantee of conditions or characteristics. With respect to any examples or hints given herein, any typical values stated herein and/or any information regarding the application of the device, Infineon Technologies hereby disclaims any and all warranties and liabilities of any kind, including without limitation, warranties of non-infringement of intellectual property rights of any third party.

SCH Title : PSOC™ Edge E84 AI Board				
Page Title: USB and Battery Power Supply Input				
Size	Document Number	Drawn By	Approved By	Rev
A4	630-60751-01	Vamsi	Ronak	03
Date: Monday, June 02, 2025			Sheet 4 of 21	

USB-C Host enable

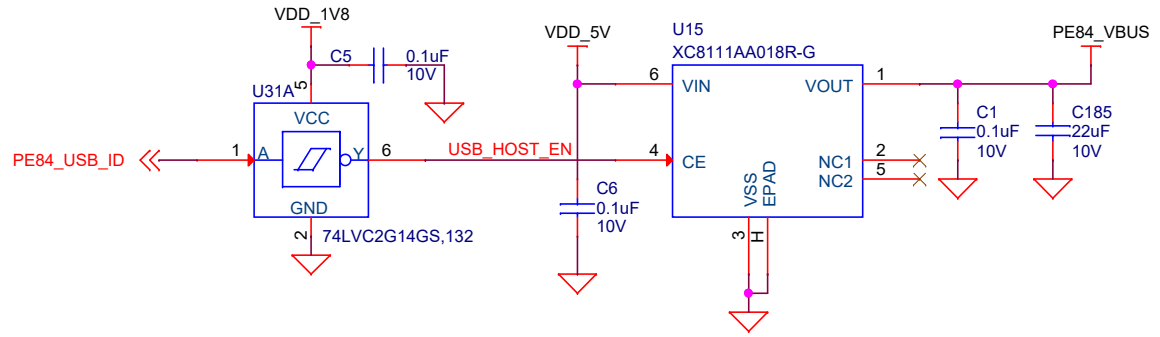

USB-C Host/Device Status LED's

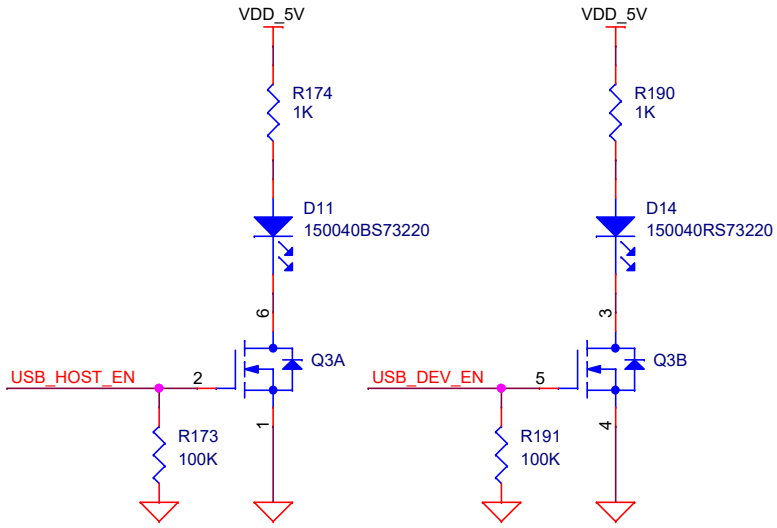

USB-C device enable and Ideal Diode Power OR'ing

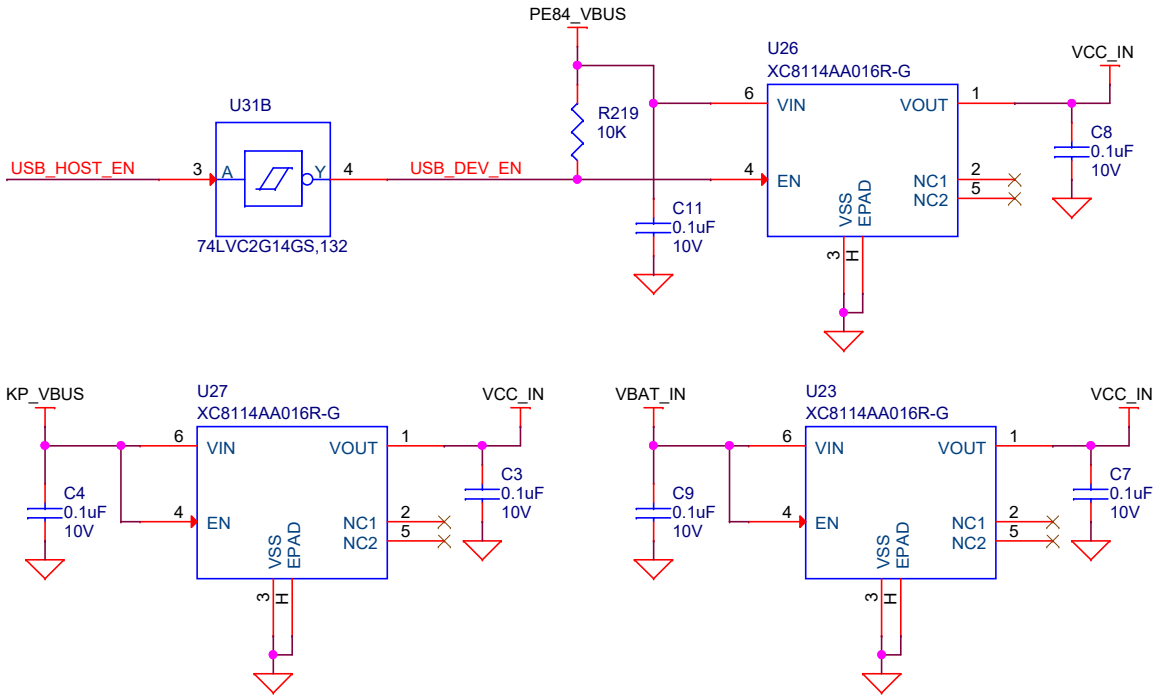

Legal Disclaimer :
The information given in this document shall in no event be regarded as a guarantee of conditions or characteristics. With respect to any examples or hints given herein, any typical values stated herein and/or any information regarding the application of the device, Infineon Technologies hereby disclaims any and all warranties and liabilities of any kind, including without limitation, warranties of non-infringement of intellectual property rights of any third party.

SCH Title : PSOC™ Edge E84 AI Board				
Page Title: USB Host & Device supply switch and Power OR'ing				
Size	Document Number	Drawn By	Approved By	Rev
A4	630-60751-01	Vamsi	Ronak	03
Date: Monday, June 02, 2025		Sheet 5 of 21		

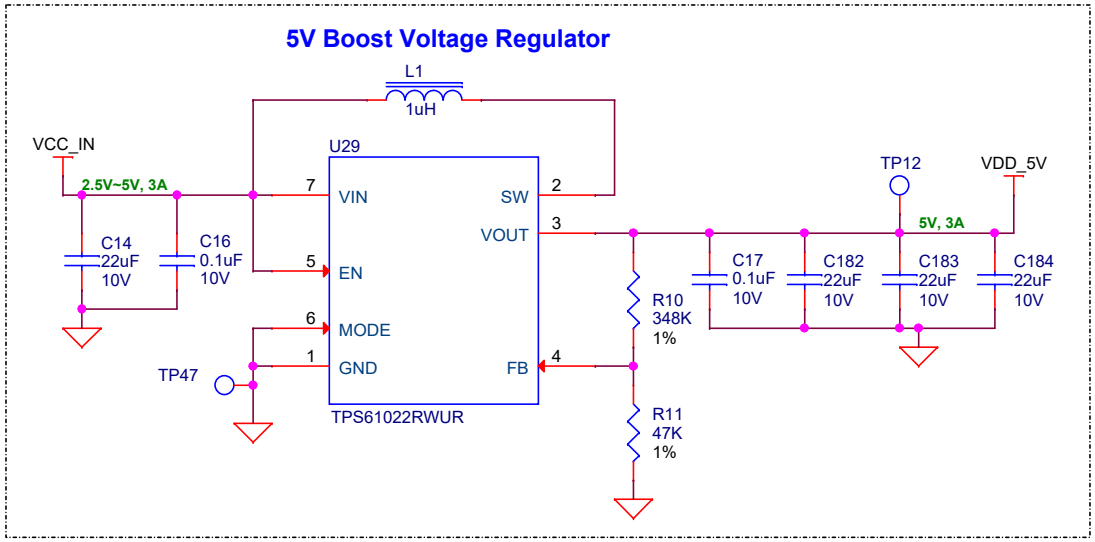

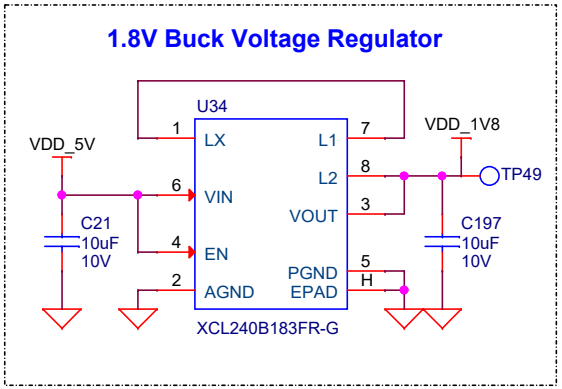

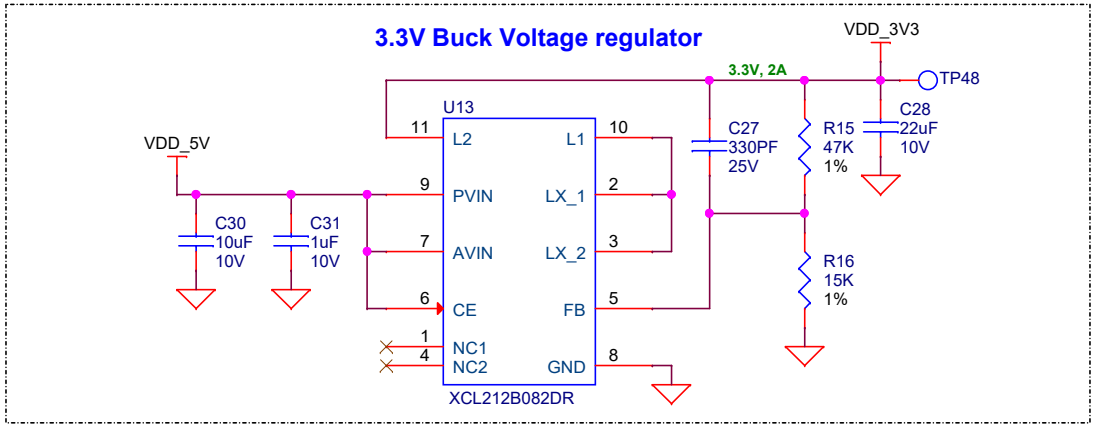

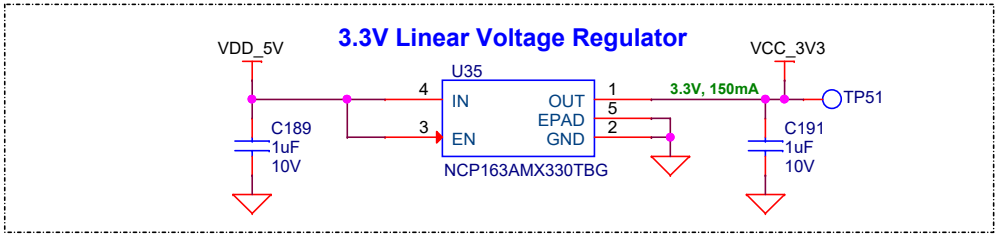

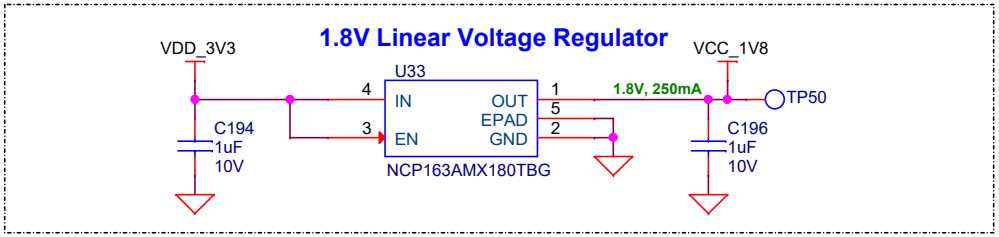

Legal Disclaimer :
The information given in this document shall in no event be regarded as a guarantee of conditions or characteristics. With respect to any examples or hints given herein, any typical values stated herein and/or any information regarding the application of the device, Infineon Technologies hereby disclaims any and all warranties and liabilities of any kind, including without limitation, warranties of non-infringement of intellectual property rights of any third party.

SCH Title : PSOC™ Edge E84 AI Board				
Page Title: Regulated Voltage Supply				
Size	Document Number	Drawn By	Approved By	Rev
A4	630-60751-01	Vamsi	Ronak	03
Date: Monday, June 02, 2025			Sheet 6 of 21	

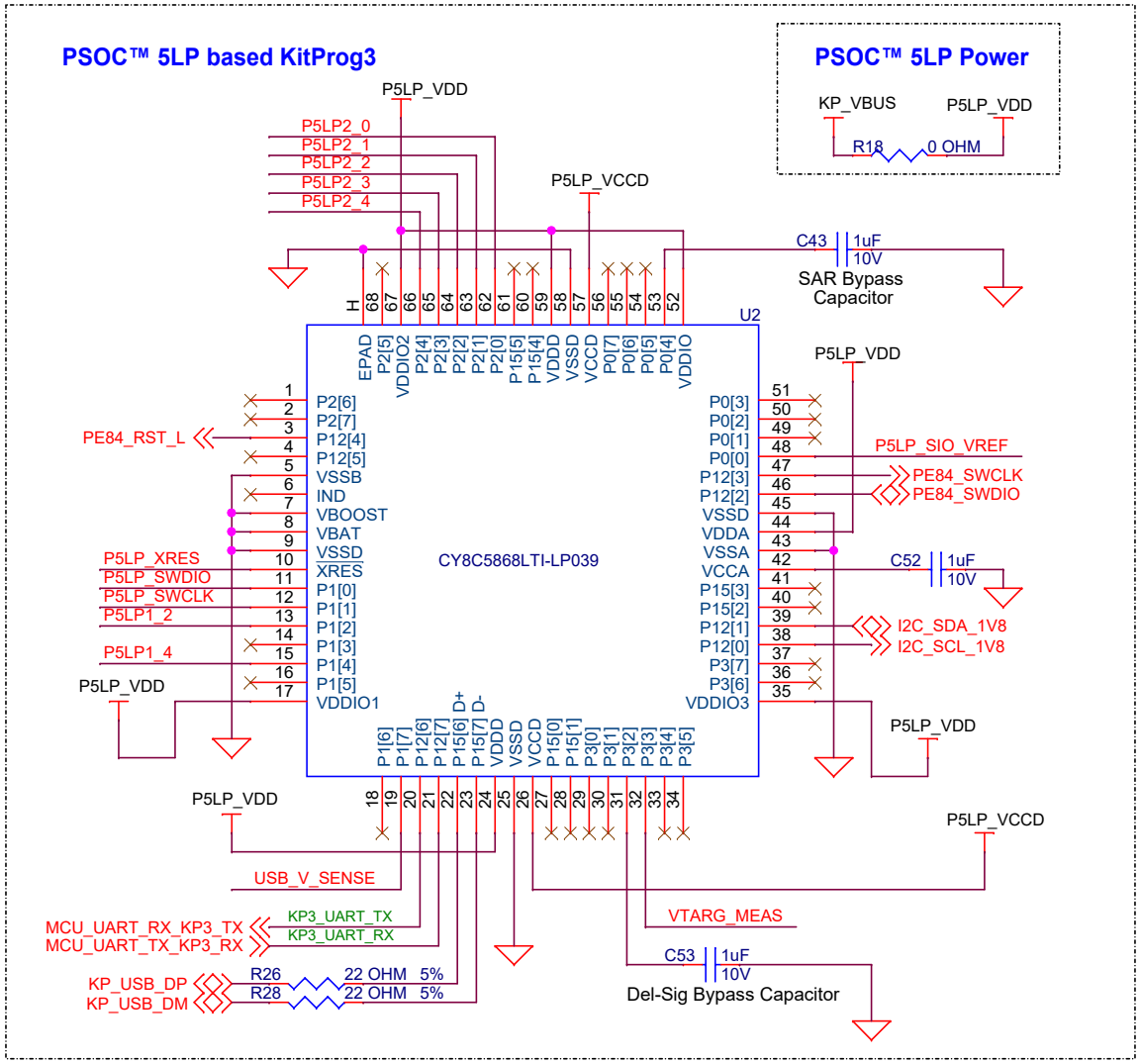

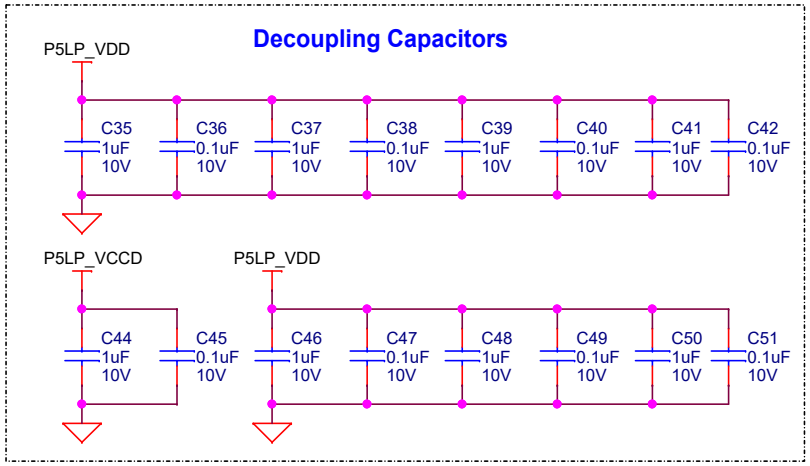

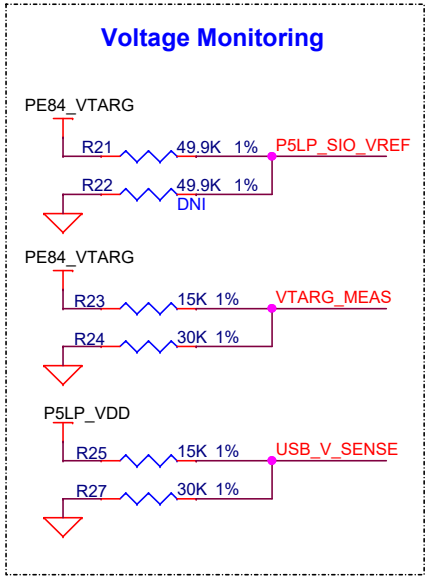

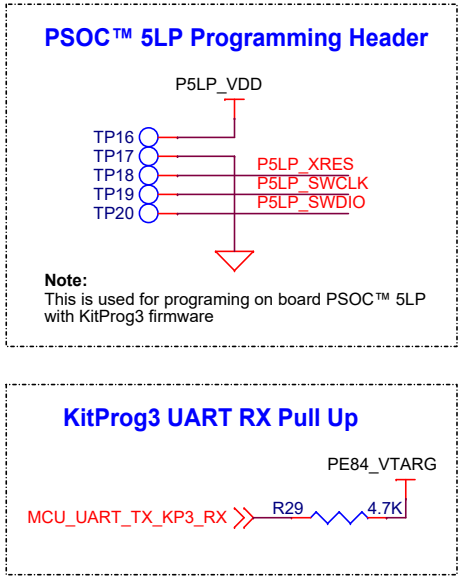

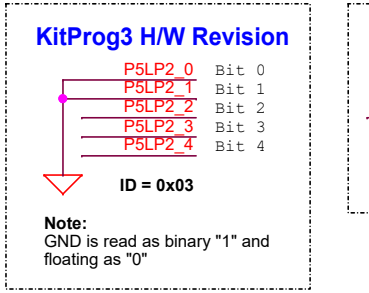

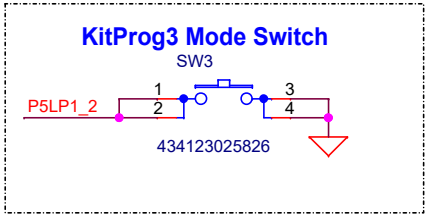

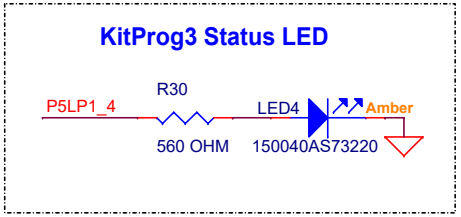

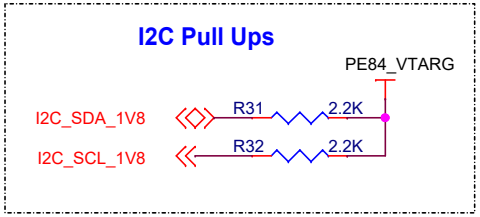

Legal Disclaimer :
The information given in this document shall in no event be regarded as a guarantee of conditions or characteristics. With respect to any examples or hints given herein, any typical values stated herein and/or any information regarding the application of the device, Infineon Technologies hereby disclaims any and all warranties and liabilities of any kind, including without limitation, warranties of non-infringement of intellectual property rights of any third party.

SCH Title : PSOC™ Edge E84 AI Board				
Page Title: KitProg3 Interface				
Size	Document Number	Drawn By	Approved By	Rev
A4	630-60751-01	Vamsi	Ronak	03
Date: Monday, June 02, 2025		Sheet 7 of 21		

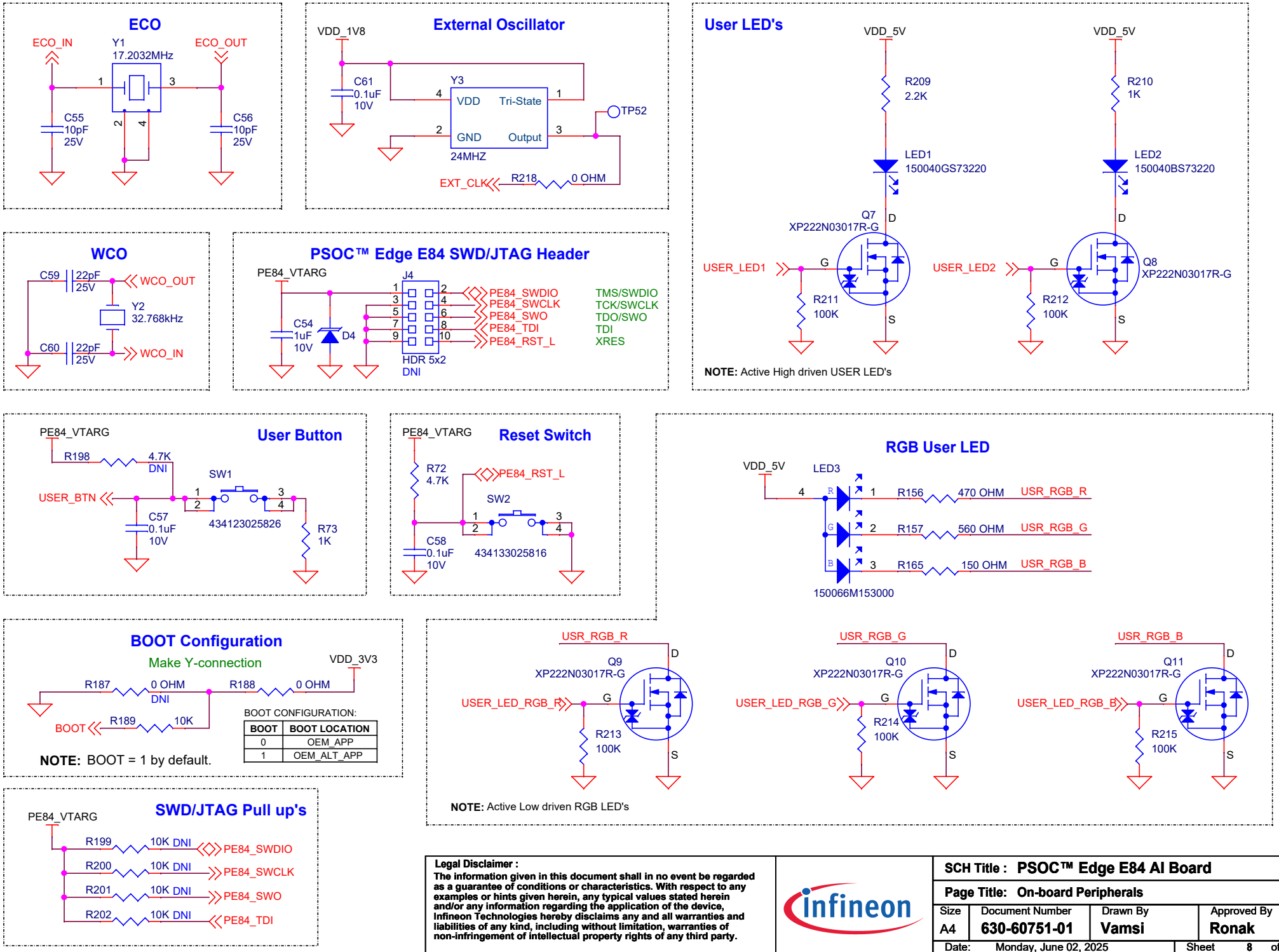
ECO
ECO_IN
Y1
17.2032MHz
ECO_OUT
C55
10pF
25V
C56
10pF
25V
External Oscillator
VDD_1V8
C61
0.1uF
10V
Y3
VDD
Tri-State
GND
Output
24MHZ
TP52
EXT_CLK
R218
0 OHM
User LED's
VDD_5V
R209
2.2K
LED1
150040GS73220
Q7
XP222N03017R-G
USER_LED1
R211
100K
R210
1K
LED2
150040BS73220
Q8
XP222N03017R-G
USER_LED2
R212
100K
NOTE: Active High driven USER LED's
WCO
C59
22pF
25V
WCO_OUT
Y2
32.768kHz
C60
22pF
25V
WCO_IN
PSOC™ Edge E84 SWD/JTAG Header
PE84_VTARG
J4
C54
1uF
10V
D4
HDR 5x2
DNI
PE84_SWDIO
PE84_SWCLK
PE84_SWO
PE84_TDI
PE84_RST_L
TMS/SWDIO
TCK/SWCLK
TDO/SWO
TDI
XRES
User Button
PE84_VTARG
R198
4.7K
DNI
SW1
USER_BTN
C57
0.1uF
10V
434123025826
R73
1K
Reset Switch
PE84_VTARG
R72
4.7K
PE84_RST_L
SW2
C58
0.1uF
10V
434133025816
RGB User LED
VDD_5V
LED3
R156
470 OHM
USR_RGB_R
R157
560 OHM
USR_RGB_G
R165
150 OHM
USR_RGB_B
150066M153000
USR_RGB_R
Q9
XP222N03017R-G
USER_LED_RGB_R
R213
100K
USR_RGB_G
Q10
XP222N03017R-G
USER_LED_RGB_G
R214
100K
USR_RGB_B
Q11
XP222N03017R-G
USER_LED_RGB_B
R215
100K
NOTE: Active Low driven RGB LED's
BOOT Configuration
Make Y-connection
VDD_3V3
R187
0 OHM
DNI
R188
0 OHM
BOOT
R189
10K
BOOT CONFIGURATION:
BOOT | BOOT LOCATION
0 | OEM_APP
1 | OEM_ALT_APP
NOTE: BOOT = 1 by default.
SWD/JTAG Pull up's
PE84_VTARG
R199
10K DNI
PE84_SWDIO
R200
10K DNI
PE84_SWCLK
R201
10K DNI
PE84_SWO
R202
10K DNI
PE84_TDI
Legal Disclaimer :
The information given in this document shall in no event be regarded as a guarantee of conditions or characteristics. With respect to any examples or hints given herein, any typical values stated herein and/or any information regarding the application of the device, Infineon Technologies hereby disclaims any and all warranties and liabilities of any kind, including without limitation, warranties of non-infringement of intellectual property rights of any third party.
infineon
SCH Title : PSOC™ Edge E84 AI Board
Page Title: On-board Peripherals
Size A4
Document Number 630-60751-01
Drawn By Vamsi
Approved By Ronak
Rev 03
Date: Monday, June 02, 2025
Sheet 8 of 21

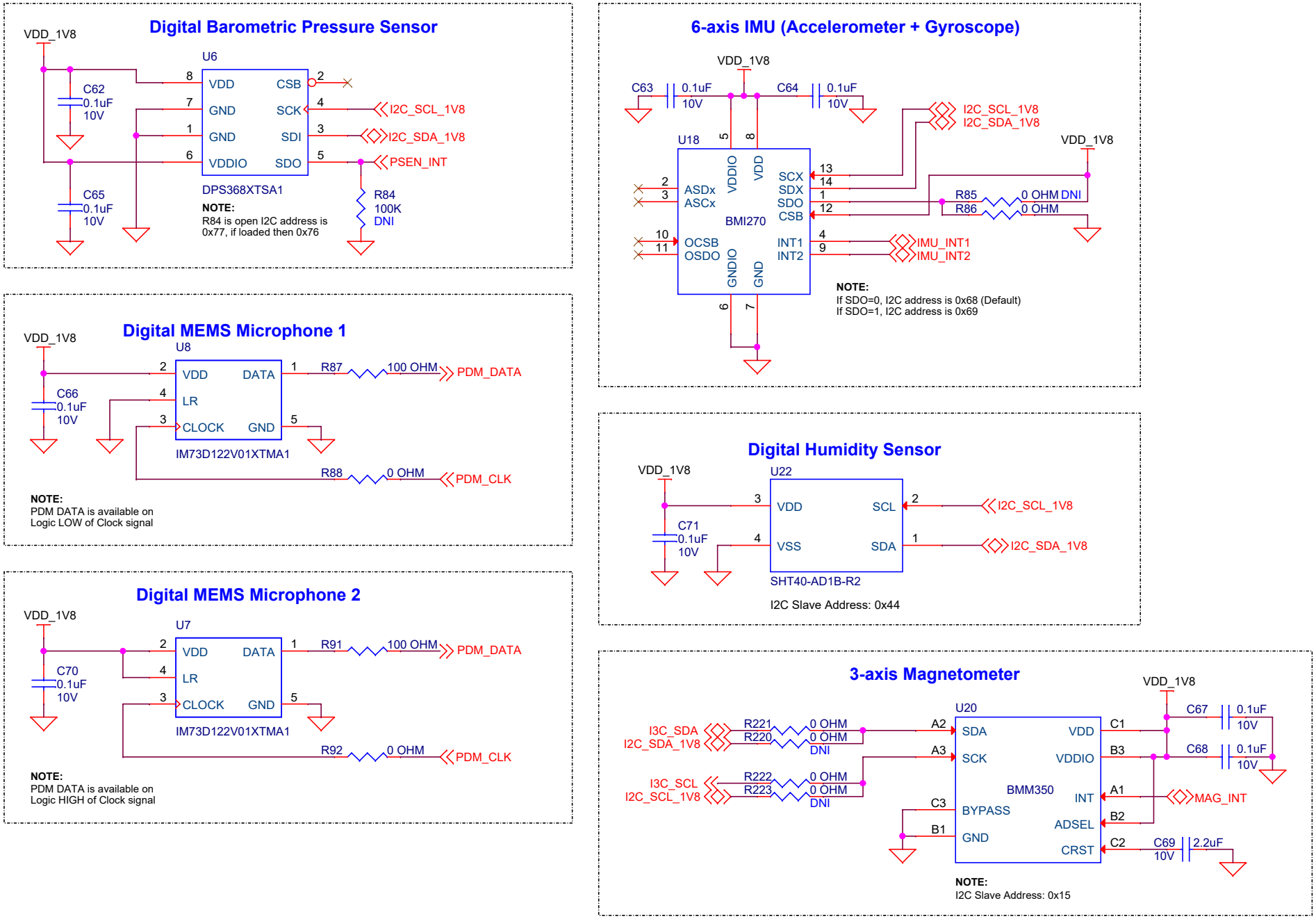

Legal Disclaimer :
The information given in this document shall in no event be regarded as a guarantee of conditions or characteristics. With respect to any examples or hints given herein, any typical values stated herein and/or any information regarding the application of the device, Infineon Technologies hereby disclaims any and all warranties and liabilities of any kind, including without limitation, warranties of non-infringement of intellectual property rights of any third party.

SCH Title : PSOC™ Edge E84 AI Board				
Page Title: On board sensors				
Size	Document Number	Drawn By	Approved By	Rev
A4	630-60751-01	Vamsi	Ronak	03
Date: Monday, June 02, 2025			Sheet 9 of 21	

BGT60TR13C RADAR Sensor

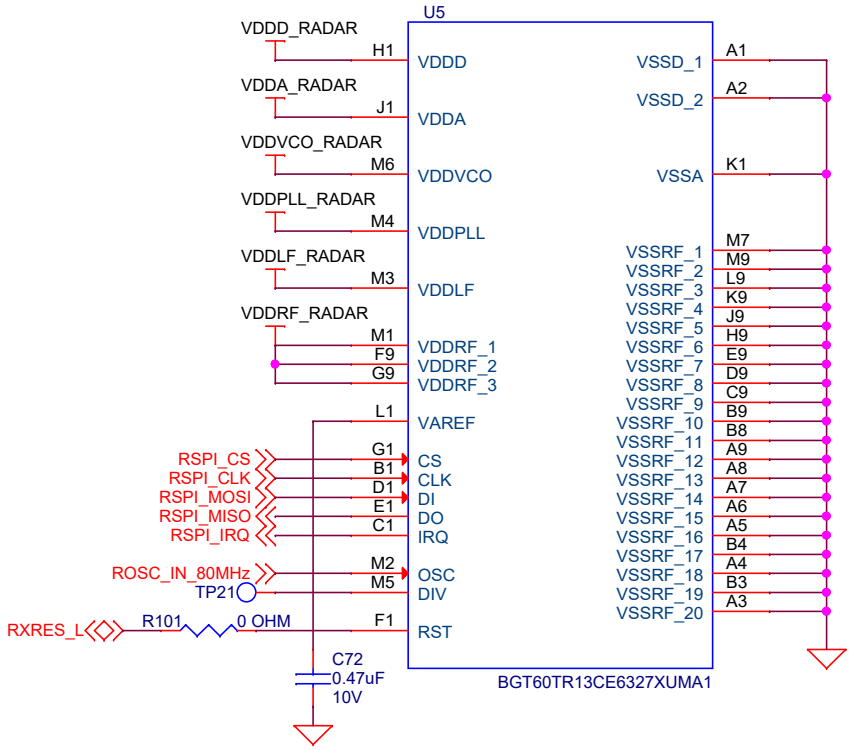

Supply for RADAR Sensor

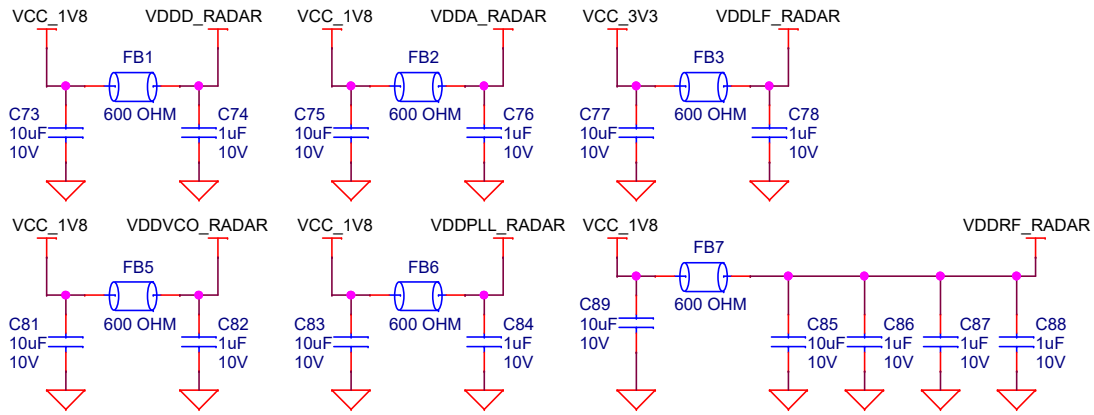

Crystal Oscillator - RADAR Clock Source

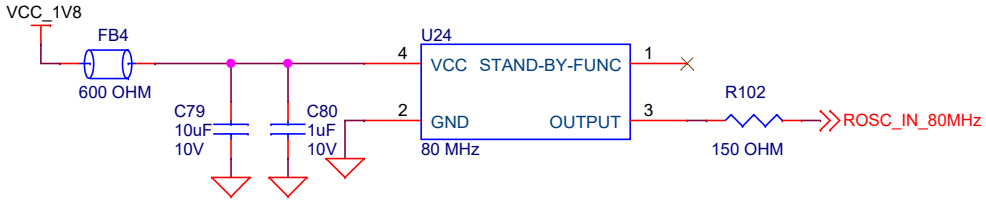

Legal Disclaimer :
The information given in this document shall in no event be regarded as a guarantee of conditions or characteristics. With respect to any examples or hints given herein, any typical values stated herein and/or any information regarding the application of the device, Infineon Technologies hereby disclaims any and all warranties and liabilities of any kind, including without limitation, warranties of non-infringement of intellectual property rights of any third party.

SCH Title : PSOC™ Edge E84 AI Board				
Page Title: RADAR Sensor interface				
Size	Document Number	Drawn By	Approved By	Rev
A4	630-60751-01	Vamsi	Ronak	03
Date: Monday, June 02, 2025			Sheet 10 of 21	

Onboard 2FY Radio Module interface

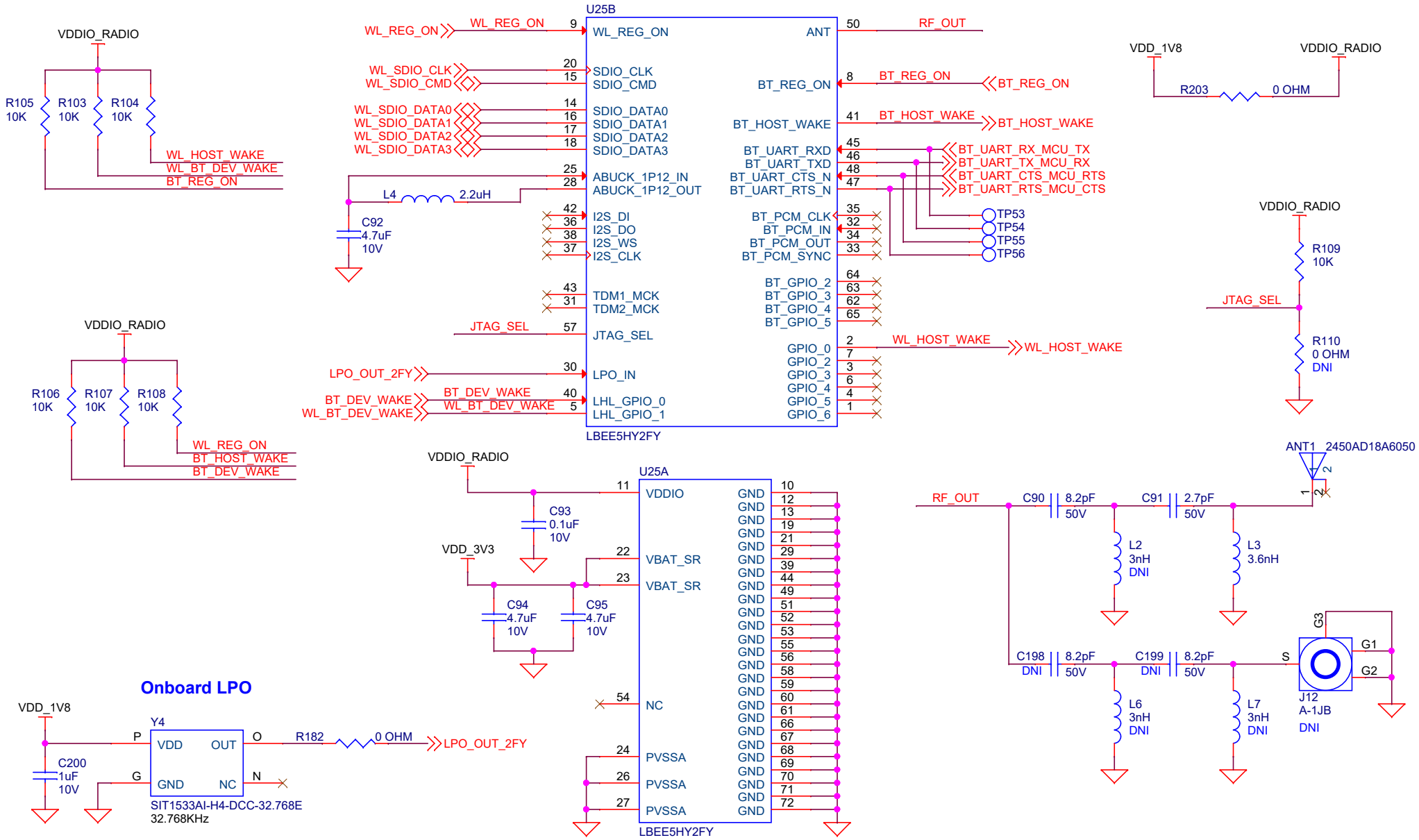

Legal Disclaimer :
The information given in this document shall in no event be regarded as a guarantee of conditions or characteristics. With respect to any examples or hints given herein, any typical values stated herein and/or any information regarding the application of the device, Infineon Technologies hereby disclaims any and all warranties and liabilities of any kind, including without limitation, warranties of non-infringement of intellectual property rights of any third party.

SCH Title : PSOC™ Edge E84 AI Board			
Page Title: 2FY Module Interface (WiFi & BLE)			
Size: A4	Document Number: 630-60751-01	Drawn By: Vamsi	Approved By: Ronak	Rev: 03
Date: Thursday, February 19, 2026	Sheet 11 of 21		

Expansion IO Header

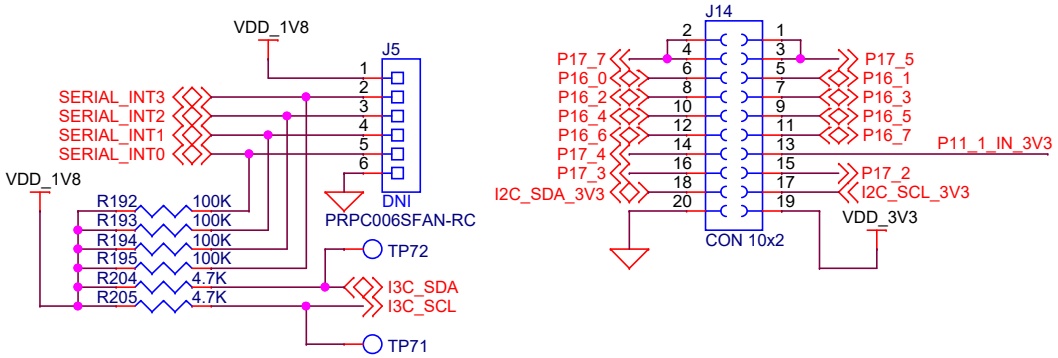

QWIIC interface

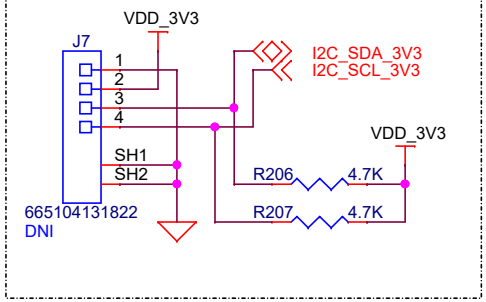

Alternative Serial Interface Configuration

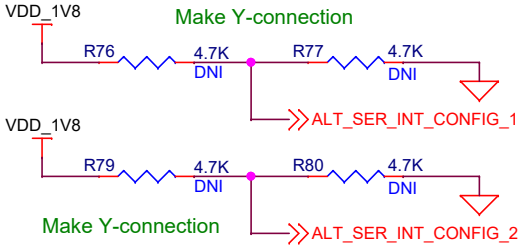

	R76, R77: DNI	R76: MOUNT; R77: DNI	R76: DNI; R77: MOUNT
R79, R80: DNI	N/A*	N/A*	N/A*
R79: MOUNT; R80: DNI	RFU**	UART	RFU**
R79: DNI; R80: MOUNT	SPI	I2C	SPI

* This feature is not supported on this board.
** RFU: Reserved for future use

NOTE: Alternate serial interface is not supported by default.

PCLK Level translator

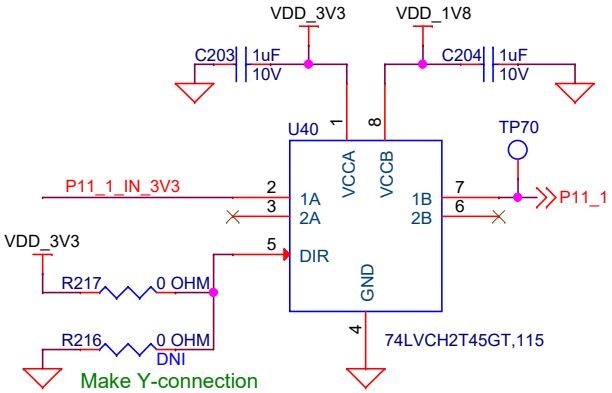

Analog Expansion IO connector

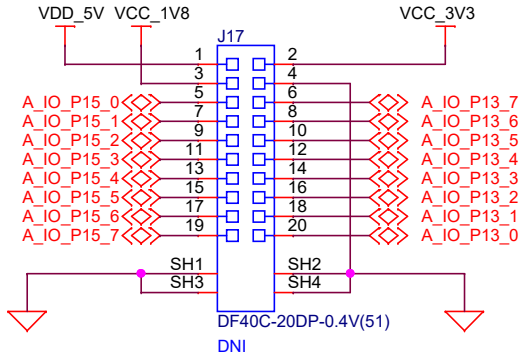

Legal Disclaimer :
The information given in this document shall in no event be regarded as a guarantee of conditions or characteristics. With respect to any examples or hints given herein, any typical values stated herein and/or any information regarding the application of the device, Infineon Technologies hereby disclaims any and all warranties and liabilities of any kind, including without limitation, warranties of non-infringement of intellectual property rights of any third party.

SCH Title : PSOC™ Edge E84 AI Board				
Page Title: IO Expansion, QWIIC and Headers				
Size	Document Number	Drawn By	Approved By	Rev
A4	630-60751-01	Vamsi	Ronak	03
Date: Wednesday, August 06, 2025		Sheet 12 of 21		

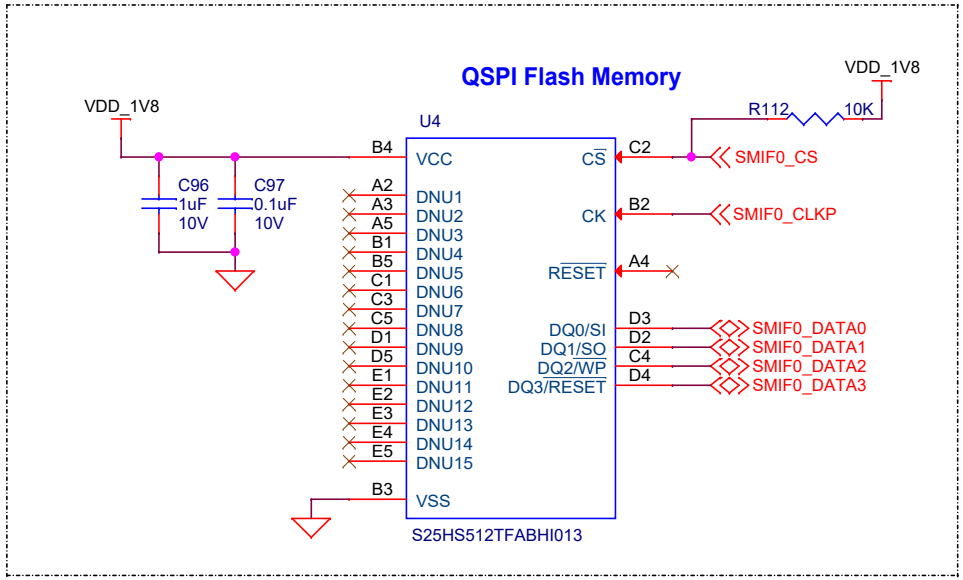

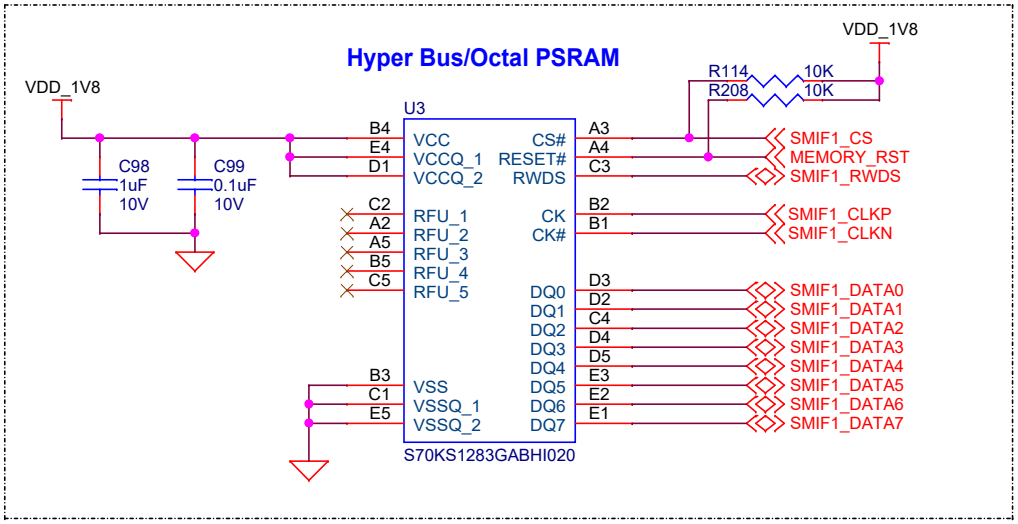

Legal Disclaimer :
The information given in this document shall in no event be regarded as a guarantee of conditions or characteristics. With respect to any examples or hints given herein, any typical values stated herein and/or any information regarding the application of the device, Infineon Technologies hereby disclaims any and all warranties and liabilities of any kind, including without limitation, warranties of non-infringement of intellectual property rights of any third party.

SCH Title : PSOC™ Edge E84 AI Board				
Page Title: Flash memory and RAM interface				
Size	Document Number	Drawn By	Approved By	Rev
A4	630-60751-01	Vamsi	Ronak	03
Date: Tuesday, June 03, 2025			Sheet 13 of 21	

Audio Class-D Amplifier

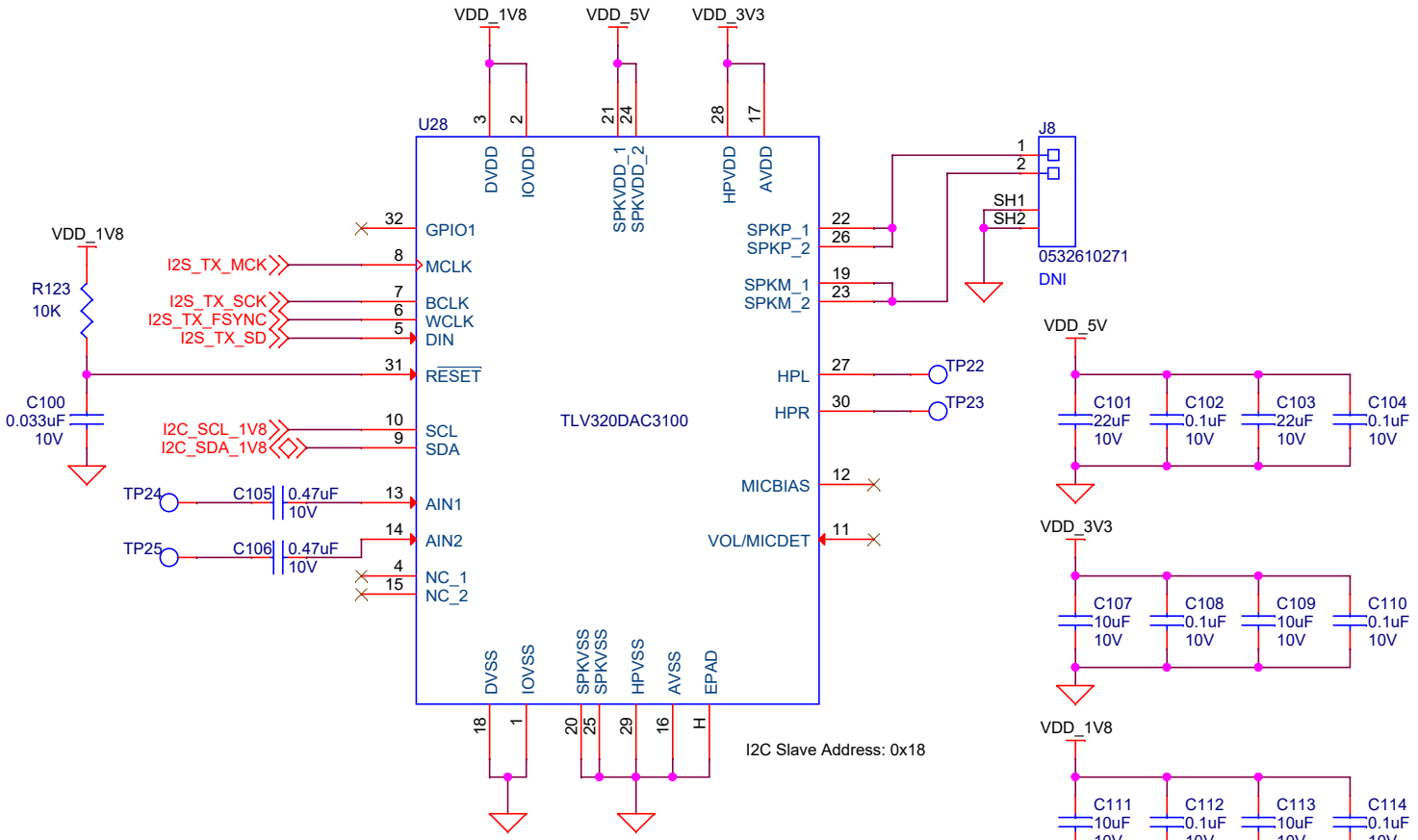

Legal Disclaimer :
The information given in this document shall in no event be regarded as a guarantee of conditions or characteristics. With respect to any examples or hints given herein, any typical values stated herein and/or any information regarding the application of the device, Infineon Technologies hereby disclaims any and all warranties and liabilities of any kind, including without limitation, warranties of non-infringement of intellectual property rights of any third party.

SCH Title : PSOC™ Edge E84 AI Board				
Page Title: Audio Class-D amplifier interface				
Size	Document Number	Drawn By	Approved By	Rev
A4	630-60751-01	Vamsi	Ronak	03
Date: Monday, June 02, 2025			Sheet 14 of 21	

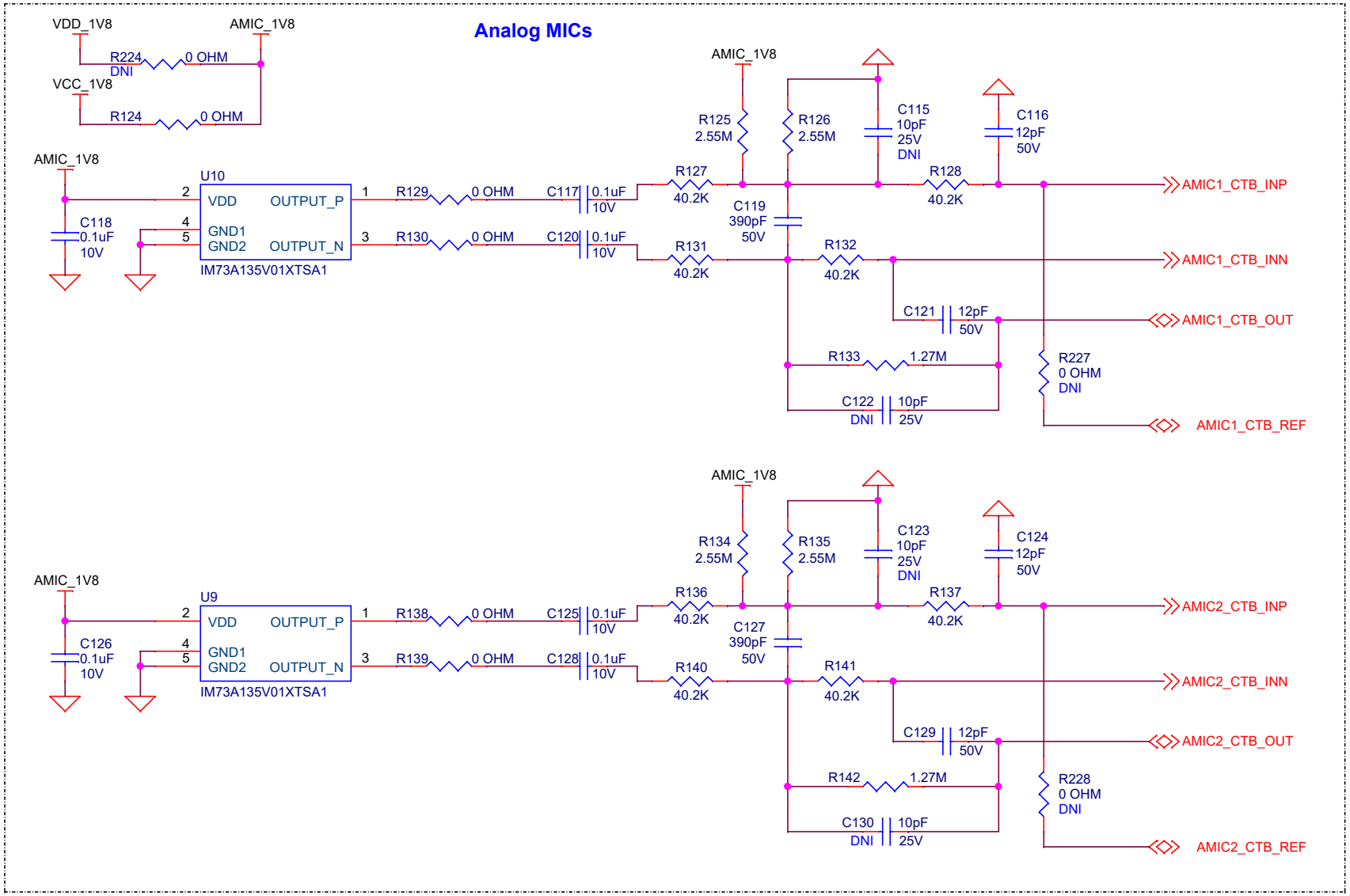

Legal Disclaimer :
The information given in this document shall in no event be regarded as a guarantee of conditions or characteristics. With respect to any examples or hints given herein, any typical values stated herein and/or any information regarding the application of the device, Infineon Technologies hereby disclaims any and all warranties and liabilities of any kind, including without limitation, warranties of non-infringement of intellectual property rights of any third party.

SCH Title : PSOC™ Edge E84 AI Board				
Page Title: Analog Mic's interface				
Size	Document Number	Drawn By	Approved By	Rev
A4	630-60751-01	Vamsi	Ronak	03
Date: Monday, June 02, 2025			Sheet 15 of 21	

MIPI-DSI R-Pi Compatible Display Interface

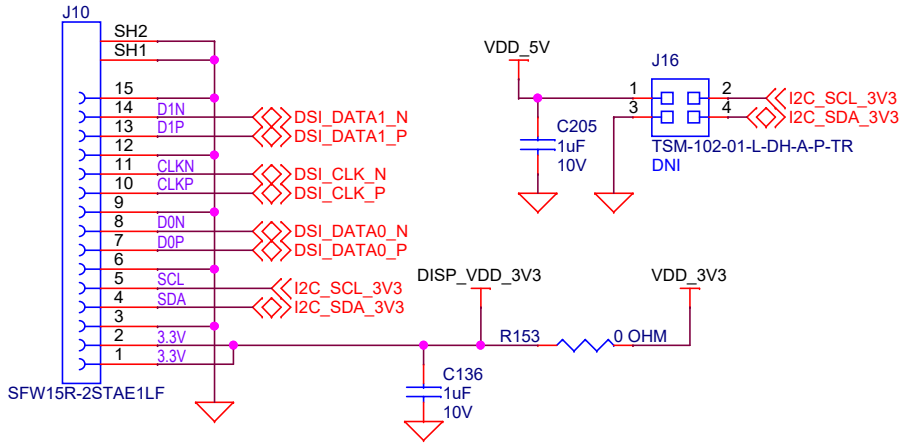

Legal Disclaimer :
The information given in this document shall in no event be regarded as a guarantee of conditions or characteristics. With respect to any examples or hints given herein, any typical values stated herein and/or any information regarding the application of the device, Infineon Technologies hereby disclaims any and all warranties and liabilities of any kind, including without limitation, warranties of non-infringement of intellectual property rights of any third party.

SCH Title : PSOC™ Edge E84 AI Board				
Page Title: MIPI DSI Display interface				
Size	Document Number	Drawn By	Approved By	Rev
A4	630-60751-01	Vamsi	Ronak	03
Date: Monday, June 02, 2025			Sheet 16 of 21	

PSOC Edge E84 Power 1

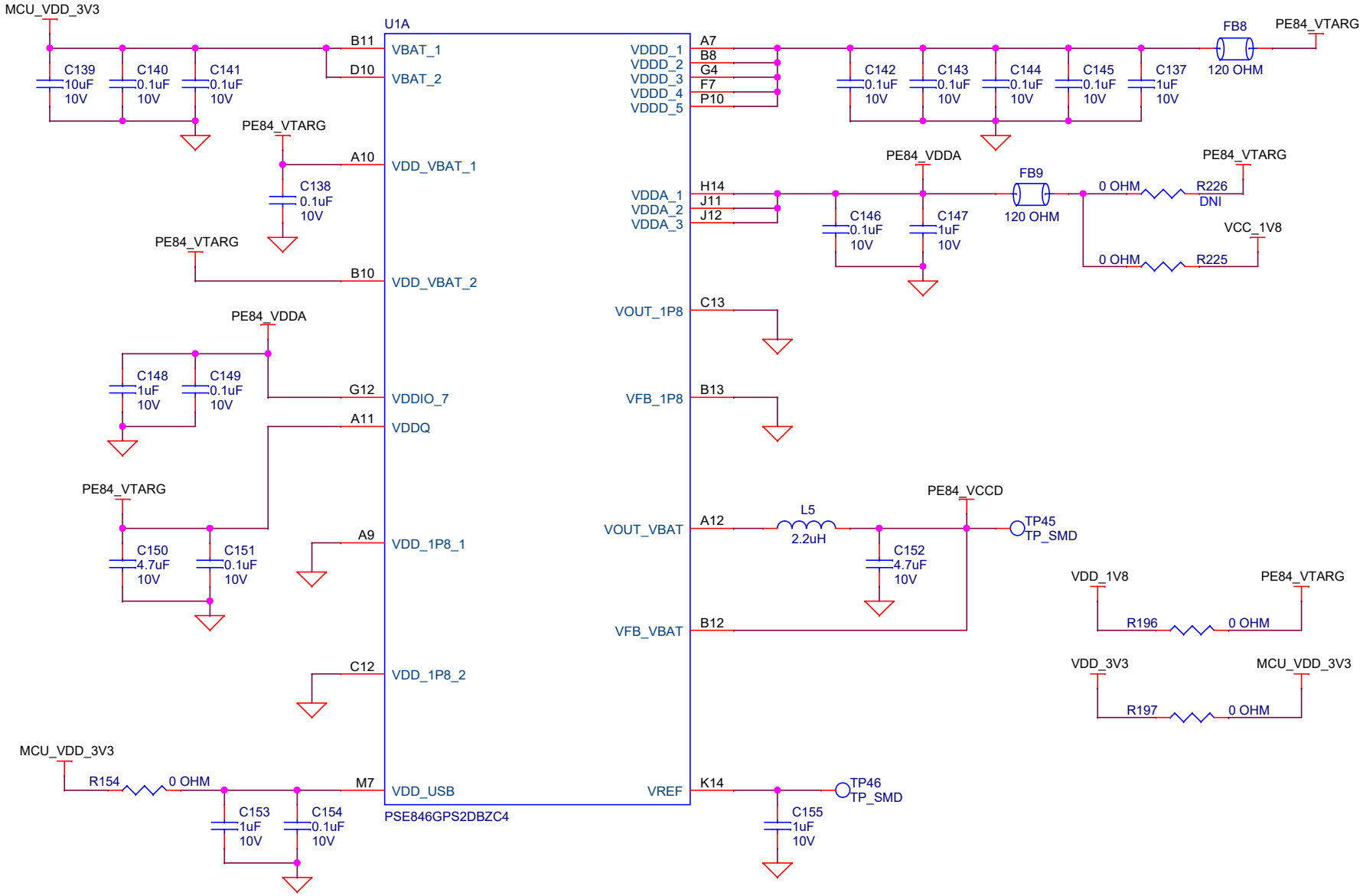

Legal Disclaimer :
The information given in this document shall in no event be regarded as a guarantee of conditions or characteristics. With respect to any examples or hints given herein, any typical values stated herein and/or any information regarding the application of the device, Infineon Technologies hereby disclaims any and all warranties and liabilities of any kind, including without limitation, warranties of non-infringement of intellectual property rights of any third party.

SCH Title : PSOC™ Edge E84 AI Board				
Page Title: PSOC™ Edge E84 Power section 1				
Size	Document Number	Drawn By	Approved By	Rev
A4	630-60751-01	Vamsi	Ronak	03
Date: Monday, June 02, 2025			Sheet 17 of 21	

PSOC Edge E84 Power 2

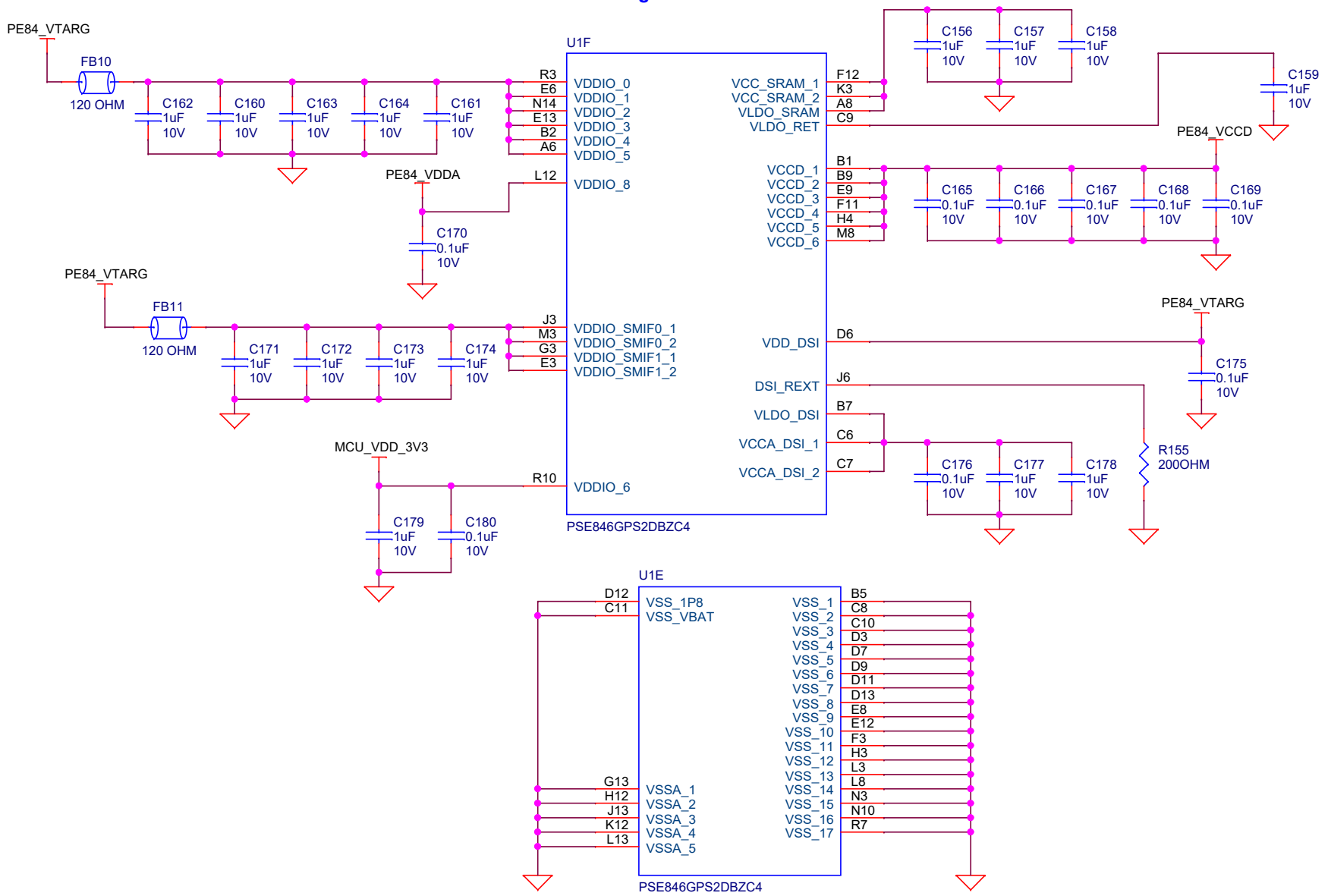

Legal Disclaimer :
The information given in this document shall in no event be regarded as a guarantee of conditions or characteristics. With respect to any examples or hints given herein, any typical values stated herein and/or any information regarding the application of the device, Infineon Technologies hereby disclaims any and all warranties and liabilities of any kind, including without limitation, warranties of non-infringement of intellectual property rights of any third party.

SCH Title : PSOC™ Edge E84 AI Board				
Page Title: PSOC™ Edge E84 Power section 2				
Size	Document Number	Drawn By	Approved By	Rev
A4	630-60751-01	Vamsi	Ronak	03
Date: Monday, June 02, 2025		Sheet 18 of 21		

PSOC Edge E84 I/Os

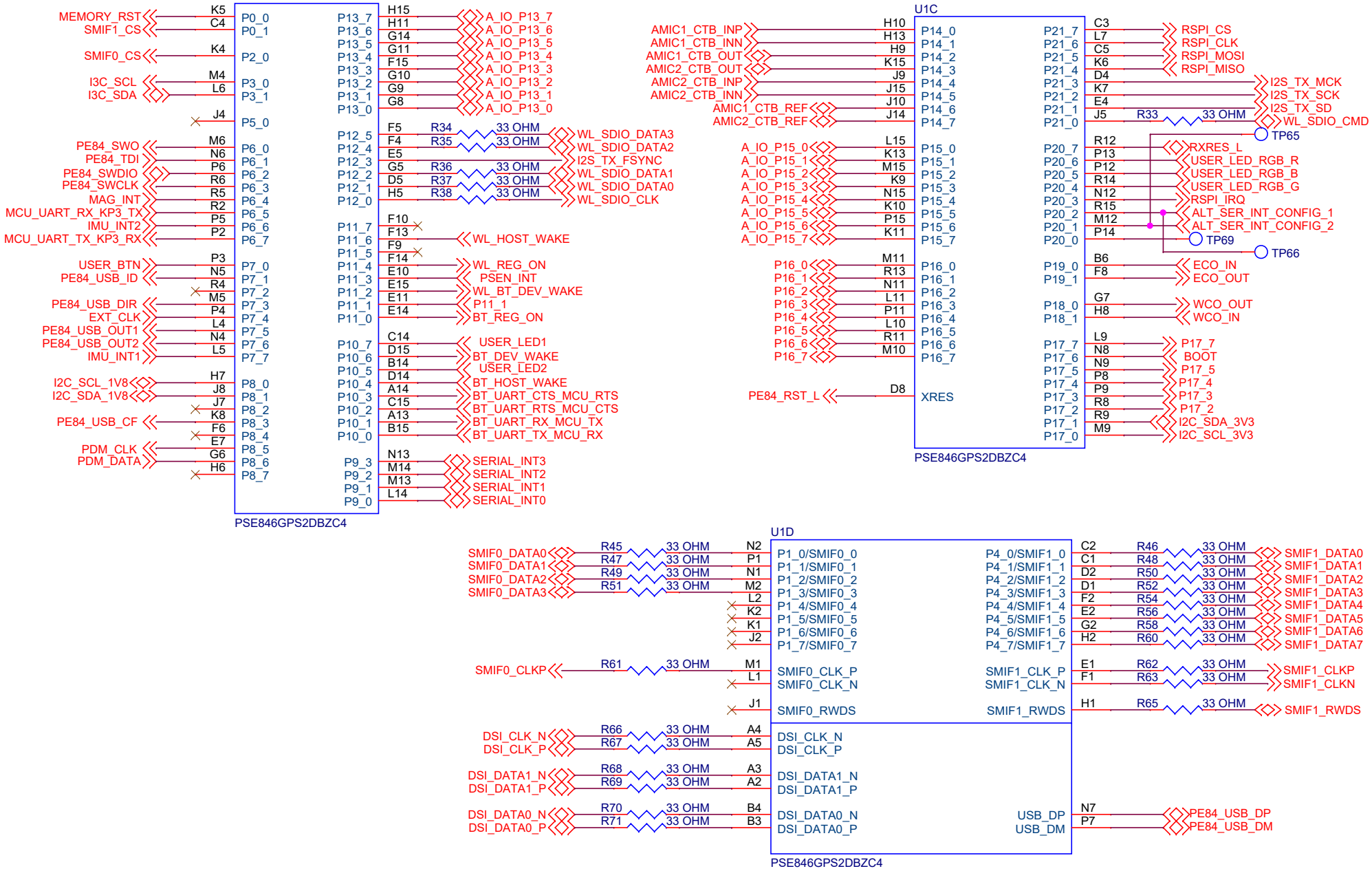

Legal Disclaimer :
The information given in this document shall in no event be regarded as a guarantee of conditions or characteristics. With respect to any examples or hints given herein, any typical values stated herein and/or any information regarding the application of the device, Infineon Technologies hereby disclaims any and all warranties and liabilities of any kind, including without limitation, warranties of non-infringement of intellectual property rights of any third party.

SCH Title : PSOC™ Edge E84 AI Board				
Page Title: PSOC™ Edge E84 I/O Signals				
Size	Document Number	Drawn By	Approved By	Rev
A4	630-60751-01	Vamsi	Ronak	03
Date: Monday, June 02, 2025			Sheet 19 of 21	

Accessories

QR Code

899-60373-01

ACC10

PCBA Label

PCA Label

ACC11

Nylon Standoffs

ACC6

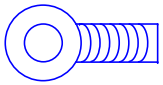

702915000

ACC7

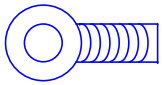

702915000

ACC8

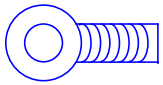

702915000

ACC9

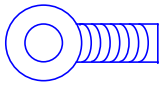

702915000

Legal Disclaimer :
The information given in this document shall in no event be regarded as a guarantee of conditions or characteristics. With respect to any examples or hints given herein, any typical values stated herein and/or any information regarding the application of the device, Infineon Technologies hereby disclaims any and all warranties and liabilities of any kind, including without limitation, warranties of non-infringement of intellectual property rights of any third party.

SCH Title : PSOC™ Edge E84 AI Board				
Page Title: Accessories				
Size	Document Number	Drawn By	Approved By	Rev
A4	630-60751-01	Vamsi	Ronak	03
Date: Monday, June 02, 2025			Sheet 20 of 21	

REVISION HISTORY

REV	DESCRIPTION OF CHANGE	DATE
0.01	Initial darft schematic	03-12-2024
0.02	Initial pin assignment feasibility and open net fixes	26-12-2024
0.03	Updated power rails and added pull resistor provision for input signals	07-01-2024
0.04	Update of DVP connector pin assignment	24-01-2024
0.05	added the Pressure sensor interrupt	24-01-2024
0.06	VBAT suuply for 2FY module fixed and added pullup for MEMORY RESET signal	27-01-2024
0.07	Updated IO pin assignment	30-01-2024
0.08	Updated IO pin assignment and added resistor for external Clock	10-02-2024
01	Initial release	12-02-2024
1.01	Updated with UART Fix and Pull up for the load switch	12-02-2024
1.02	Updated I3C provision for BMM350	12-02-2024
1.03	Updated the LED series resistor and LED2 colour	12-03-2025
1.04	LED series resistor are updated for USB device and Host LED	13-03-2025
1.05	Combined the analog ground and digital grounds, Added analog IO Expansion connector, Updated the Pin assignment	02-04-2025
1.06	optimized pin assignments for layout feasibility	07-04-2025
1.07	added test points for I3C interface	09-04-2025
02	Rev02 release	11-04-2025
03	Rev03 release: updated QSPI flash and RF Matching circuit	20-05-2025

Legal Disclaimer :
The information given in this document shall in no event be regarded as a guarantee of conditions or characteristics. With respect to any examples or hints given herein, any typical values stated herein and/or any information regarding the application of the device, Infineon Technologies hereby disclaims any and all warranties and liabilities of any kind, including without limitation, warranties of non-infringement of intellectual property rights of any third party.