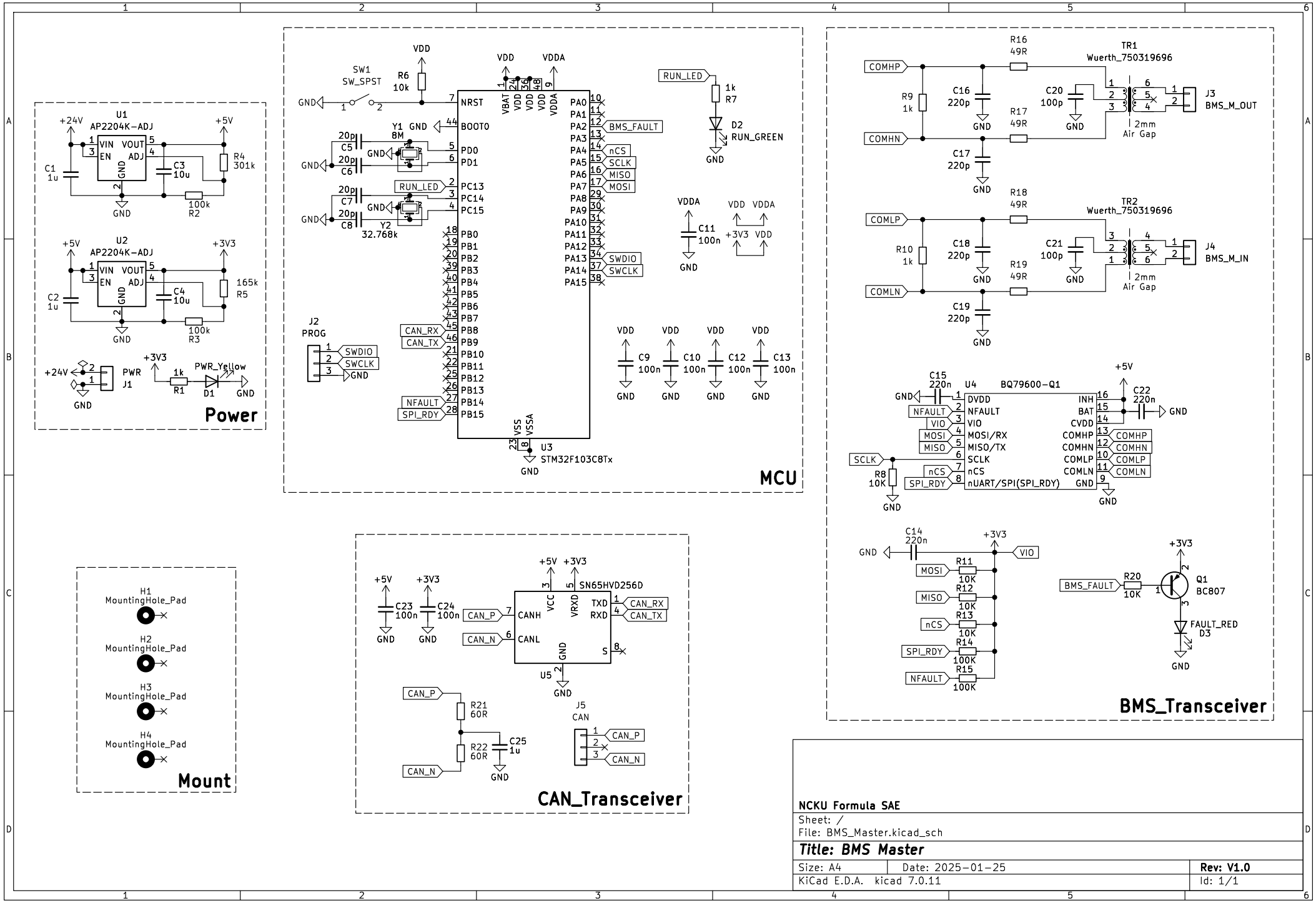

NCKU Formula SAE

Sheet: /

File: BMS_Master.kicad_sch

Title: BMS Master

Size: A4	Date: 2025-01-25	Rev: V1.0
KiCad E.D.A. kicad 7.0.11		Id: 1/1