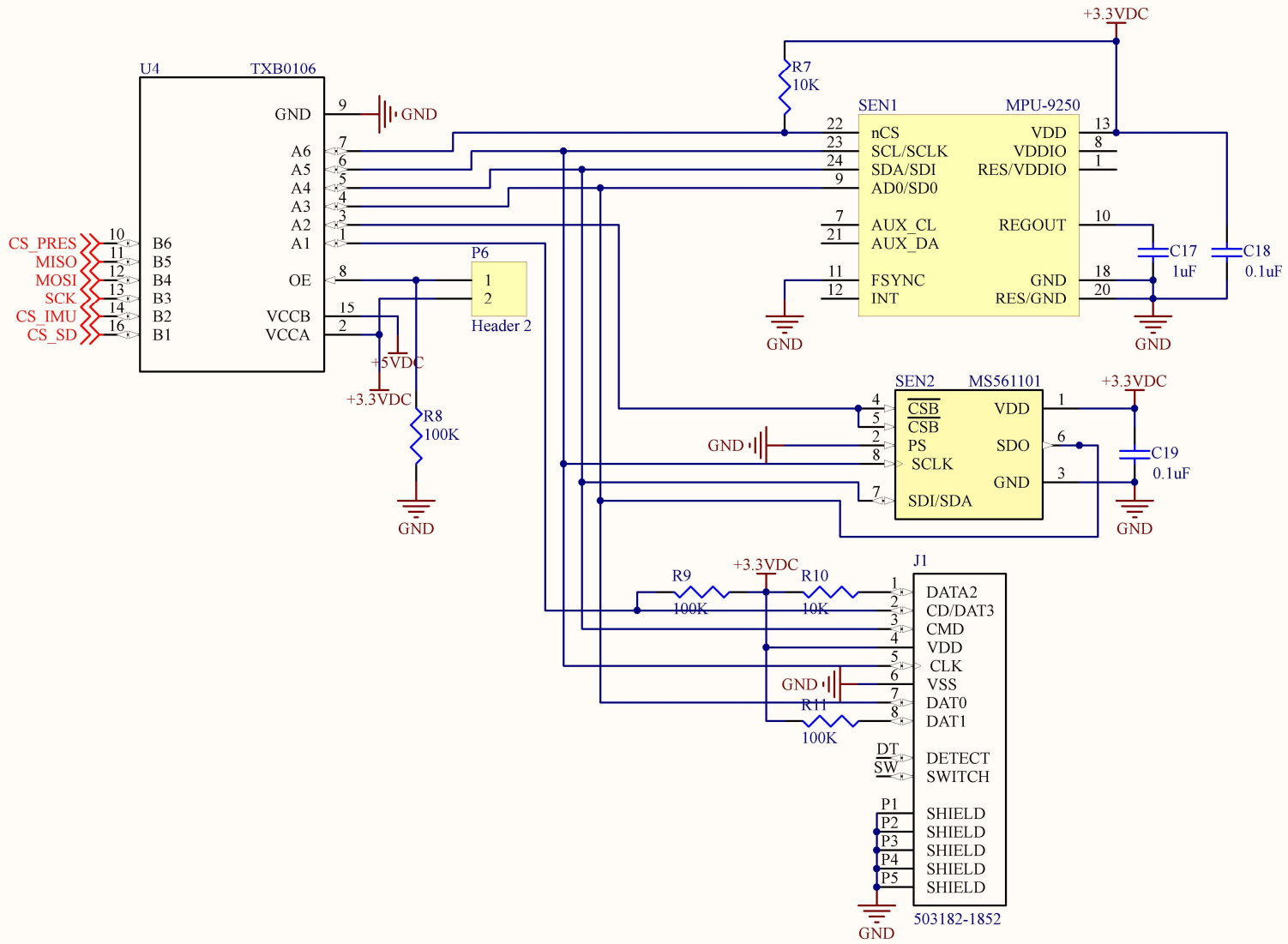

Title		
Size A	Number	Revision
Date: 2/14/2019	Sheet of	
File: C:\Users\..\Sensors.SchDoc	Drawn By:	