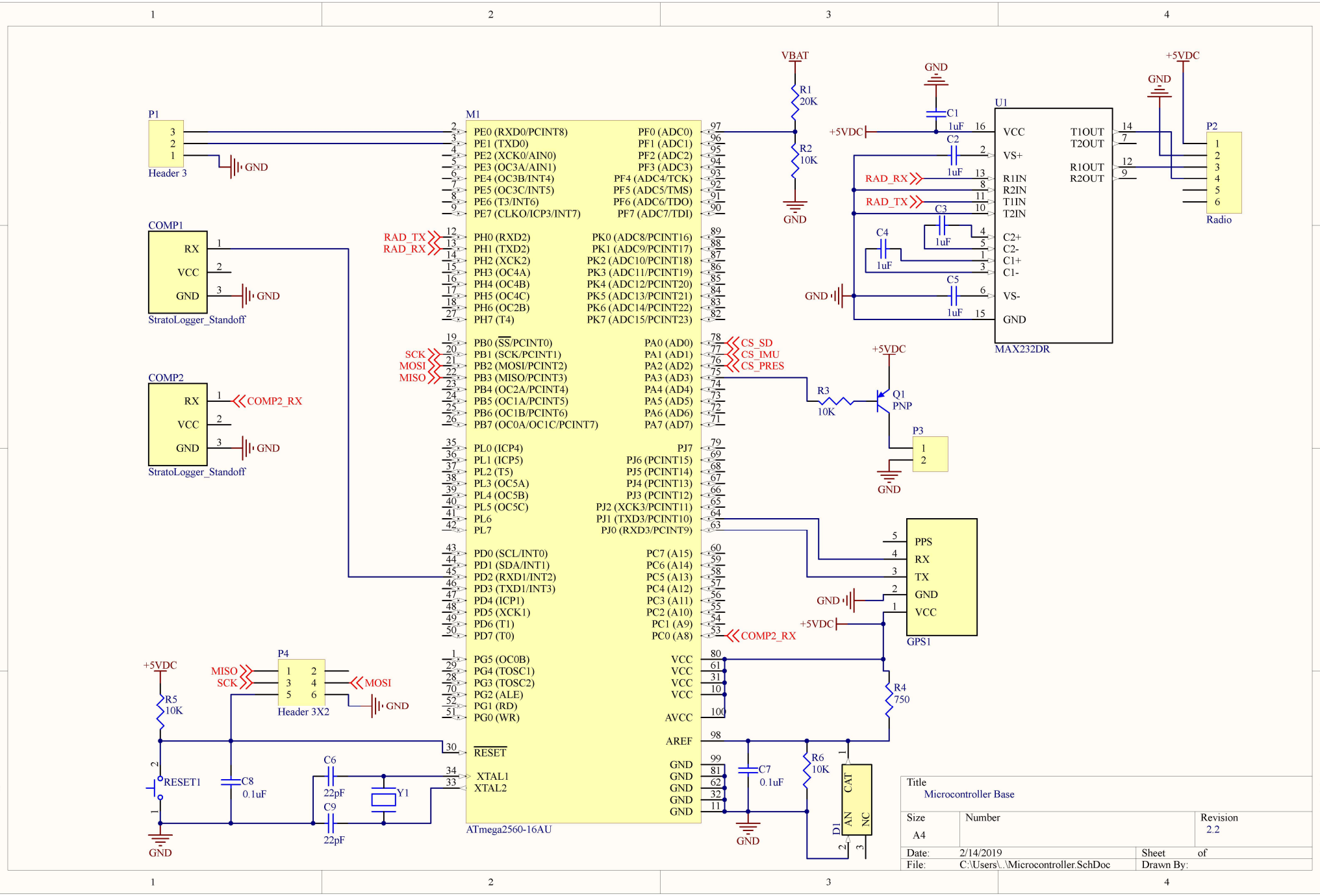

Title: Microcontroller Base		
Size: A4	Number	Revision: 2.2
Date: 2/14/2019		Sheet of
File: C:\Users\...\Microcontroller.SchDoc		Drawn By: