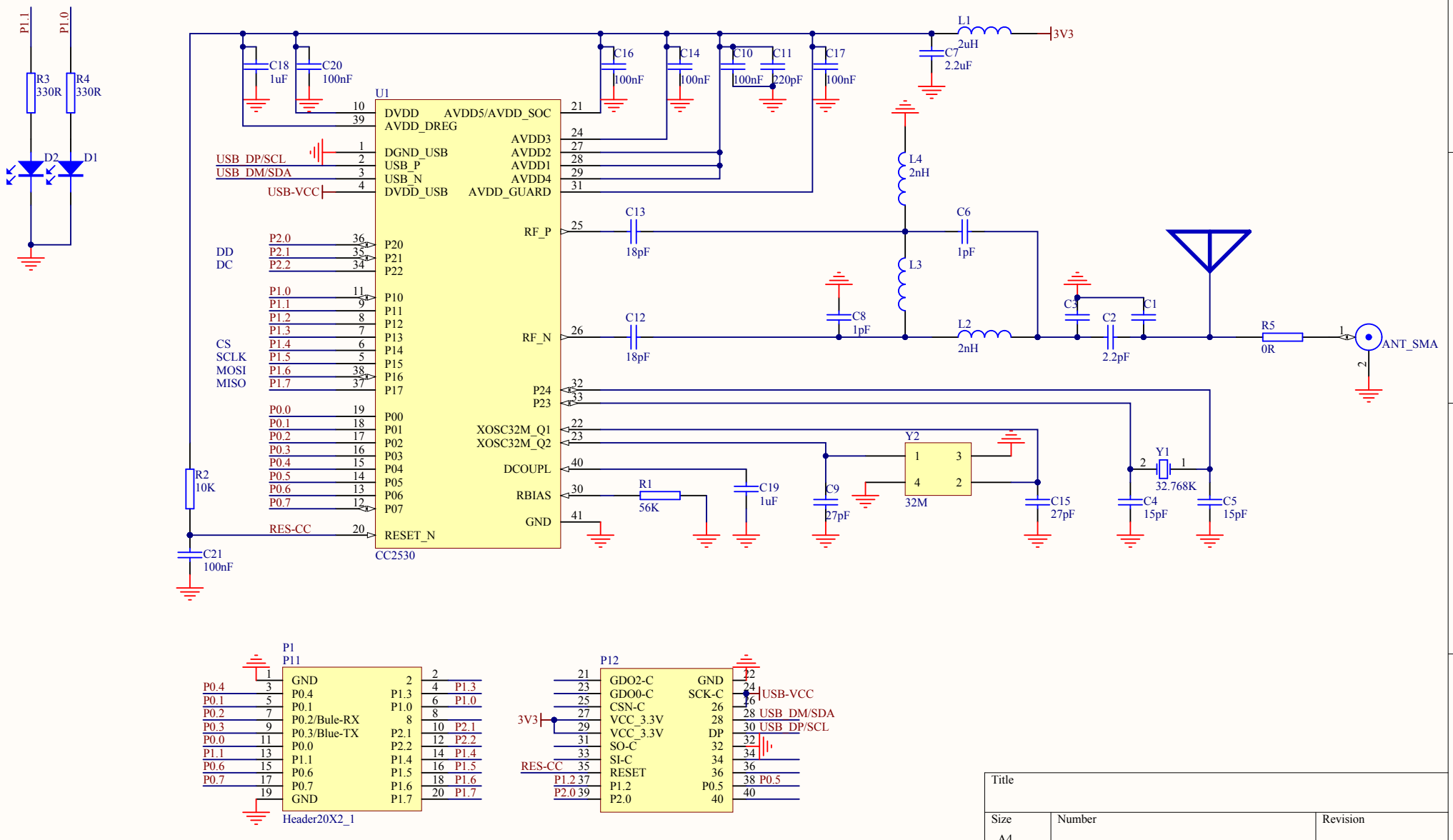


| Title | | |
|---|---|---|
| Size A4 | Number | Revision |
| Date: 2019/5/5 | Sheet of | |
| File: H:\FRO\..\102-002-00011-08,RF-CC2530-Draw By原理图.SchDoc | | |