綠色能源工作坊 2025

Instructor: Jacky

01 Introduction 簡介

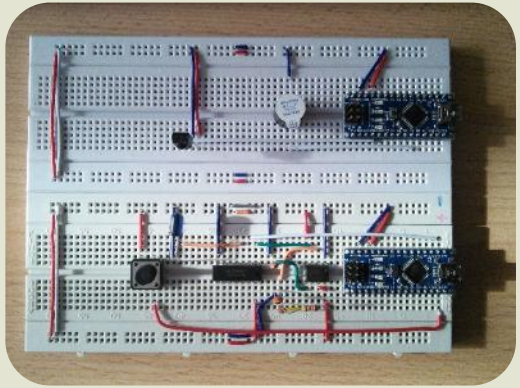

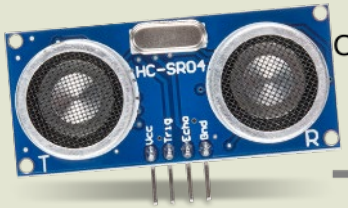

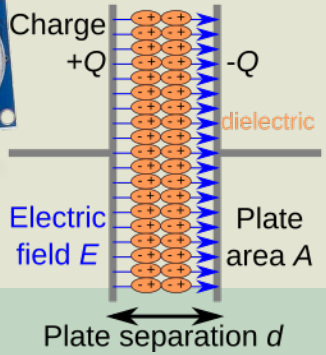

02

香港的發電情況
Electricity Generation in Hong Kong

香港主要用什麼發電燃料?

What is the primary fuel used for electricity generation in Hong Kong?

發電燃料組合(2020) Electricity generation in 2020

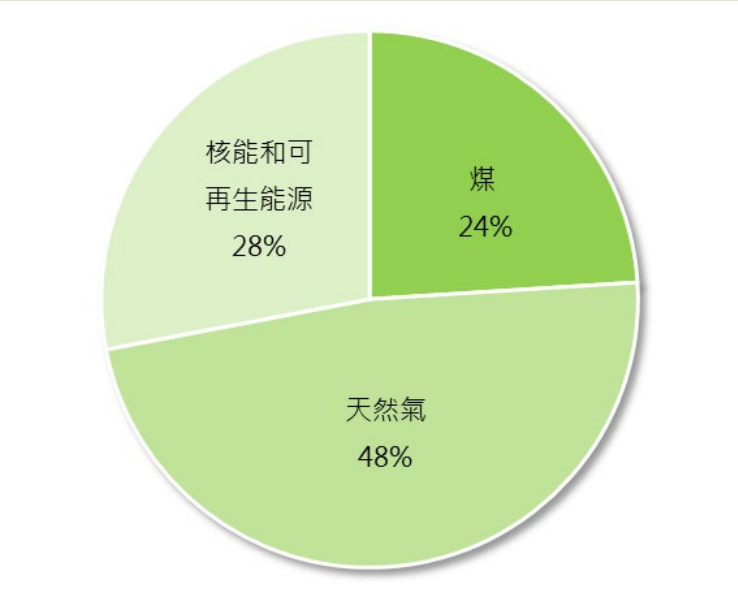

中華人民共和國香港特別行政區政府
環境及生態局
環境科

主頁 » 能源 » 能源供應

能源供應

香港本土並無能源資源。政府認為讓私營機構因應市場需求供應所需能源最為理想。

現時電力主要由中華電力有限公司(中電)及香港電燈有限公司(港燈)負責供應，兩者均為投資者所擁有，而且並無專營權。中電為九龍及新界並包括大嶼山、長洲及其他部分離島供應電力；而港燈則為港島及其鄰近的鴨脷洲和南丫島供應電力。

Source: 機電工程署 EMSD & 環境及生態局 EEB

03

Green Energy
綠色能源

甚麼是綠色能源?
What is green energy?

綠色能源 Green Energy

Different Forms of Renewable Energy

Geothermal Energy Biomass Energy Marine Energy

定義 Definition:

- 可再生（來自無限資源）

Renewable (Derived from infinite sources)

- 潔淨 （對環境無害/「零污染」）

Clean (Doesn't hurt the environment)

例子 Examples

- 潔淨但不可再生 → 例如:核能

Clean but not renewable → E.g. Nuclear power

- 可再生未必潔淨 → 例如:大型水力發電廠

Renewable is not always clean → E.g. Large hydropower plant

能量守恆定律：能量既不能被創造，也不能被消滅。
換句話說，『產生能量』
實際上是能量從一種**形式轉換**為另一種形式。

According to the **law of conservation of energy**,
energy can neither be created nor destroyed.
In other words, “Energy generation”
is energy changing **from one form to another**.

仲有無其他?
Any alternatives?

城市還有其他潛在的潔淨能源嗎？
Are there any other possible clean energy sources in the city?

04

城市中的能源
Energy in the City

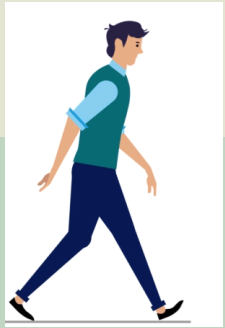

行路發電！Generate Electricity by Walking

香港中文大學
The Chinese University of Hong Kong

CUHK in TOUCH
Latest updates from a world innovation hub

搜尋 探索更多

中大研行路發電裝置　最快一年後投產

港聞
發布時間：2019/10/29 14:41
最後更新：2019/11/28 17:30

分享：

熱門 海皇粥店 母親節 DSE2025 中年好聲音3 關稅戰 中一

▲ 裝置固定在用家的小腿及大腿，行路便可發電

中大最近研發出人體動能電力採集系統，可轉化步行時膝部彎曲的動能為電力，行8000至10000步就可產生智能手環一日的用電量，適合為低耗量裝置供電。研究團隊計劃將技術商品化，應用至登山裝備或衣服，最快一年可完成研究。

pavegen
London, United Kingdom
View profile

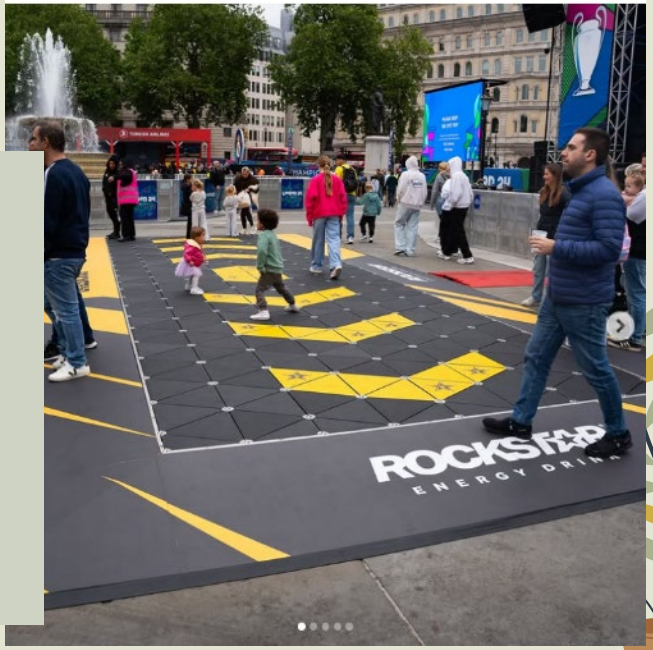

打字發電！Generate Electricity by Typing

香港中文大學 CUHK | 傳訊及公共關係處 Communications and Public Relations Office

主頁 | 宣布事項 | 新聞中心 | 澄清 | 活動 | 中大成就 | 資源分享 | 凝聚

中大新聞中心

新聞稿

中大無電池無線鍵盤及智能鞋墊獲日內瓦發明展兩獎 動能驅動技術引領可持續創新

2025年6月4日

分享

無電池無線鍵盤利用嶄新先進的「動能—電能」轉換技術，將用戶每次按鍵的動能直接轉化成電能，供鍵盤運作及信號傳輸。

下載所有相片

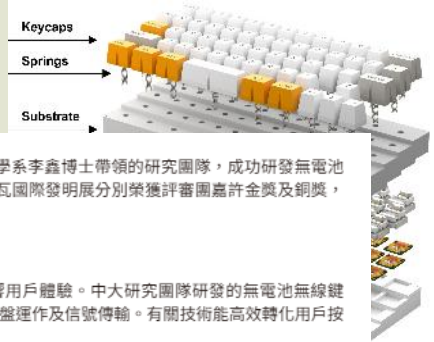

香港中文大學（中大）卓敏機械與自動化工程學教授廖維新教授與機械與自動化工程學系李鑫博士帶領的研究團隊，成功研發無電池無線鍵盤，及具備步態監測功能的無電池智能鞋墊。兩項創新發明早前在第50屆日內瓦國際發明展分別榮獲評審團嘉許金獎及銅獎，充分體現中大在推進創新科技、可持續發展及知識轉移方面的努力不懈。

無電池無線鍵盤：環保打字體驗

傳統無線鍵盤雖方便攜帶，但需要經常更換電池或充電，不僅產生電子垃圾，也影響用戶體驗。中大研究團隊研發的無電池無線鍵盤，利用尖端「動能–電能」轉換技術，將用戶每次按鍵的動能直接轉化成電能，供鍵盤運作及信號傳輸。有關技術能高效轉化用戶按鍵的能量，確保穩定且無延遲的無線通訊，優化用戶的使用體驗。

與現時市場上的太陽能或射頻（RF）鍵盤相比，無電池無線鍵盤在效能穩定、保養費及環保上更有優勢。李鑫博士表示：「無電池無線鍵盤無需使用傳統電池，不僅減少電子垃圾，亦為用戶提供可持續且便捷的解決方案。鍵盤透過用戶每次按鍵產生能量，實現穩定高效的無線通訊，為現有無電池技術帶來突破。」

無電池智能鞋墊：步態監測技術的創新應用

步態監測（Gait Analysis）是對人體運動的規律和特徵進行系統性分析，有助早期慢性疾病檢測及康復治療與運動表現的分析。然而，傳統的步態監測傳感器需要頻繁更換電池或充電，限制了其便利性及持續性。有見及此，中大團隊開發的無電池智能鞋墊，將能量收集與感測功能整合於單一壓電元件之中，通過採集用戶行走時的動能，無需外部電源實現感測功能。

智能鞋墊可實時監測步頻、步長、步態變異性及對稱性等參數。廖維新教授指出：「無電池智能鞋墊不僅解決了電池更換和充電帶來的問題，還能夠提供持續的實時步態監測，為長期健康追蹤、早期疾病檢測、綜合運動表現分析及跌倒風險評估開闢新可能。」他續指，這款設備率先將「能量收集」與「運動感測」技術成功融合，是壓電科技與動能收集領域的一大技術突破，為可穿戴設備開創了新的技術應用方向。

知識轉移與應用實踐

兩項發明在日內瓦國際發明展表現優異，突顯中大科研團隊力求創新，並致力推動知識轉移與實踐的理念。廖維新教授表示：「獎項肯定了團隊在開發可持續及創新科技方面的努力。我們將繼續優化及完善有關技術，探索更廣泛的應用範疇，加速環保電子設備的普及化進程。我們期望將技術推出市場，以提升市民的生活質素，並引領公眾實踐環保責任。」

05

運作原理是什麼?
How does it work?

壓電效應
Piezoelectric Effect

- 是介電質(即**絕緣體**)在受到**機械應力**或**壓力**時產生電荷
- is a **dielectric** material generating an electrical charge when subjected to **mechanical stress** or **pressure**.

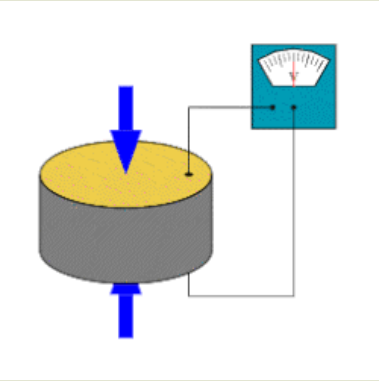

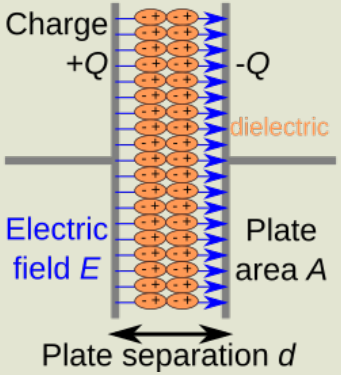

機械應力/壓力 ⇔ 電力

應用：

- 運動偵測 Motion detection
- 敲門感測器 Door knock sensor
- 壓力量測系統 Pressure measurement system
- ...

小測試 Little Testing

A1喺左邊

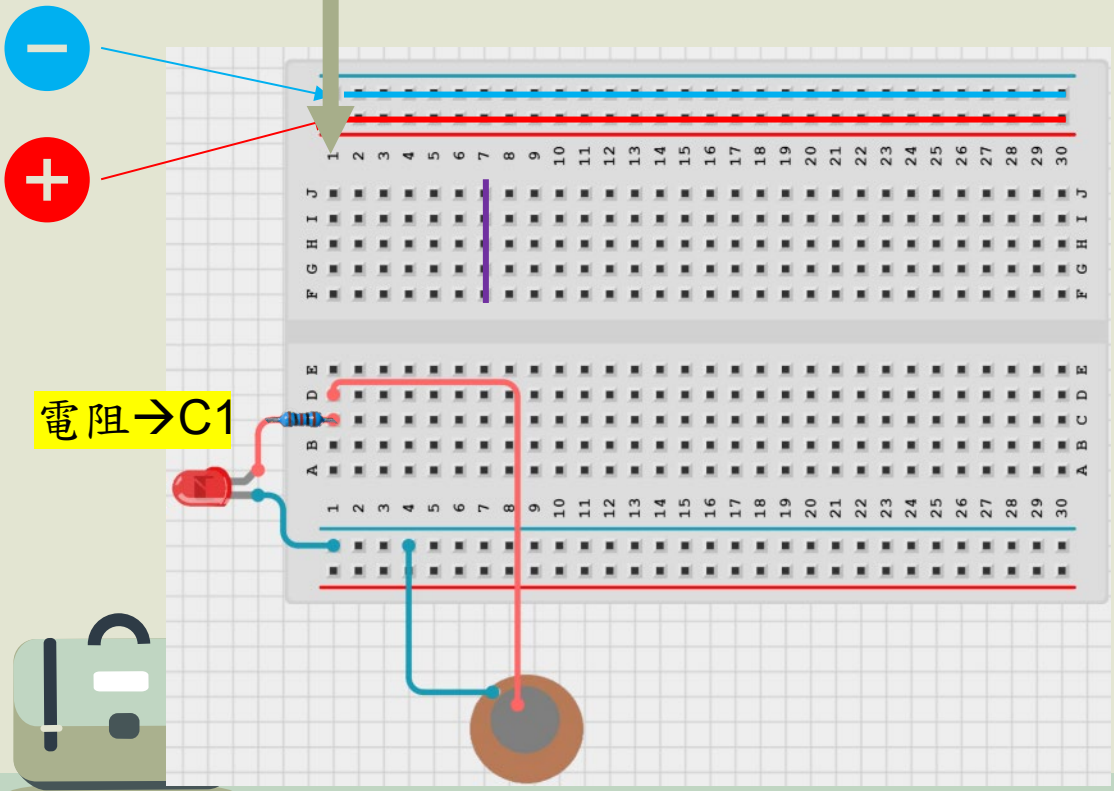

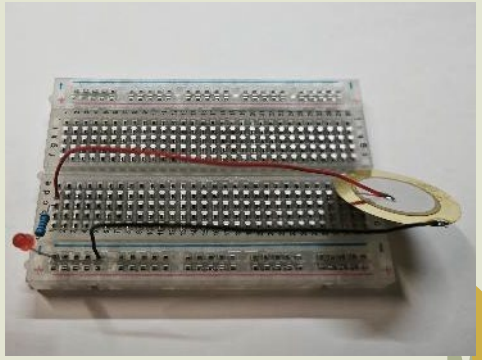

超聲波感測器 HC-SR04 Ultrasonic Sensor

- 用於利用聲波**測量距離**
- Used to **measure distance** by utilizing sound waves

- 通過觸發引腳發射超聲波（40 kHz）。測量聲波撞擊物體後**反彈**回**回波引腳**所需的時間
- Emits an ultrasonic wave (40 kHz) via the trigger pin. Measures the time it takes for the wave to **bounce back** to the **echo pin** after hitting an object

VCC	Trig	Echo	GND
	發送訊號	接收返回的訊號	

應用：
- 機器人中的障礙物檢測
- 停車感應器的距離測量 Obst
- 智能家居系統中的
- ...

Fun Fact:
蝙蝠也用超聲波感測作回聲定位！
Ultrasonic sensors are also used by bats for echolocation!

06 Introduction to Arduino

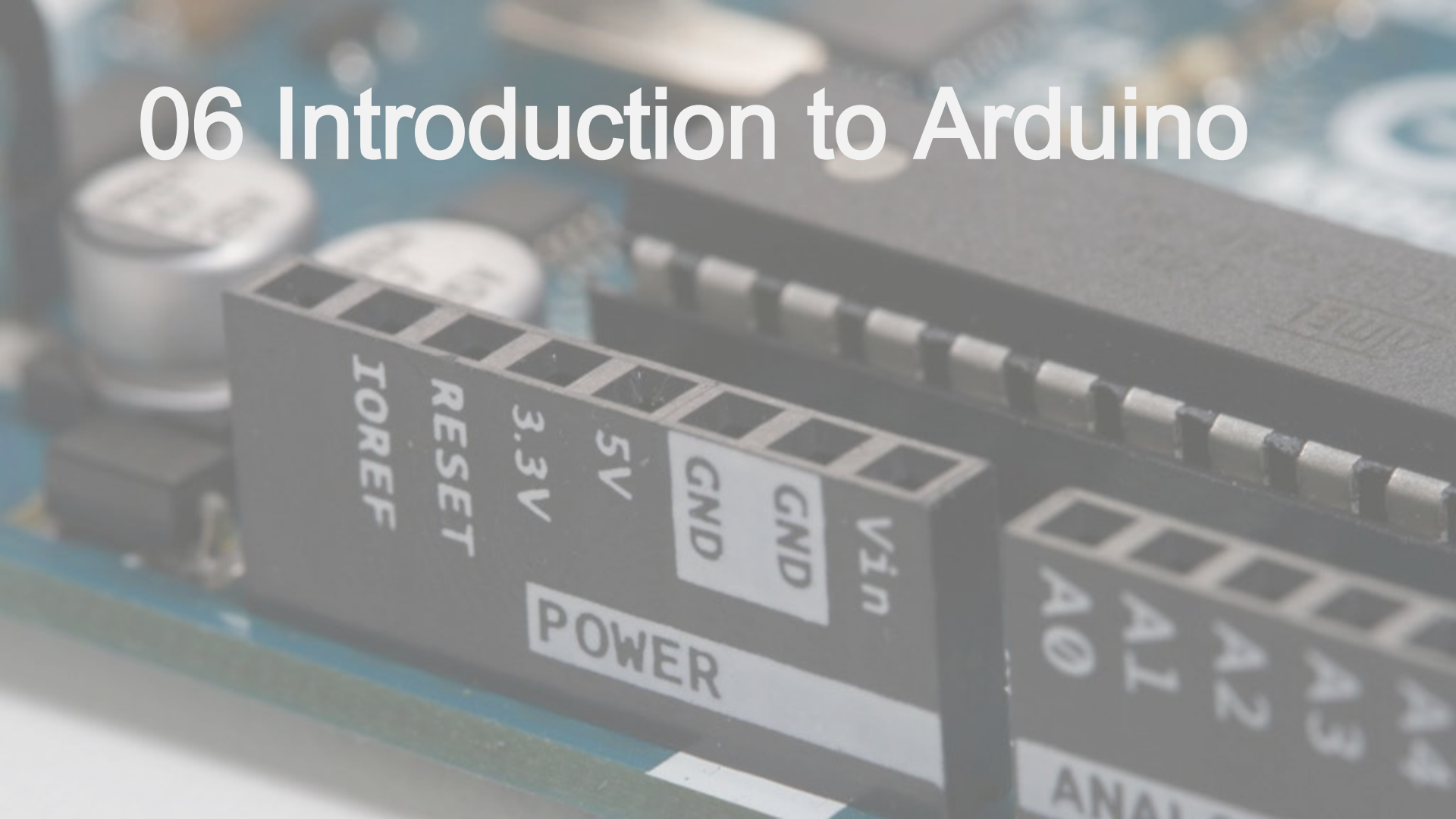

Introduction to Arduino

- 一個基於易於使用的硬體和軟體的**開放原始碼**電子平台。

An **open-source** electronics platform based on easy-to-use hardware and software Arduino

- 包括一個**微控制器板**和一個**軟體開發環境**，用於編寫和上傳程式碼到板子上。

Consists of a **microcontroller board** and a **software development** environment for writing and uploading code to the board

- 板子可以編程控制各種電子元件，如 **LED、馬達、感測器**等。

Can be programmed to control various electronic components such as **LEDs, motors, sensors**...

- 用於 Arduino 的編程語言基於 C/C++，但**簡化**了初學者的學習難度。

The programming language used for Arduino is based on **C/C++ but simplified** for beginners

Arduino Nano

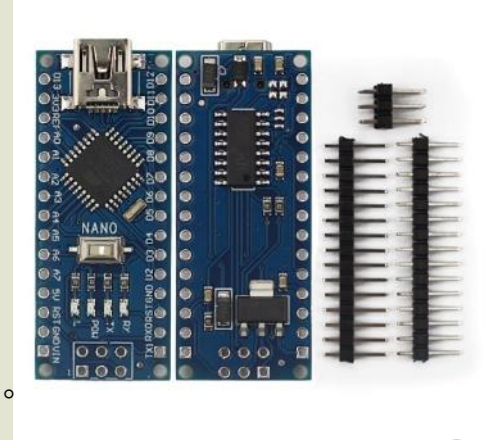

07 構建電路
Building the Circuit

Part 1 – 閃爍 LED (Blinking LED)

LED	Arduino Nano
+ （帶電阻） (with resistor)	D13
-	GND

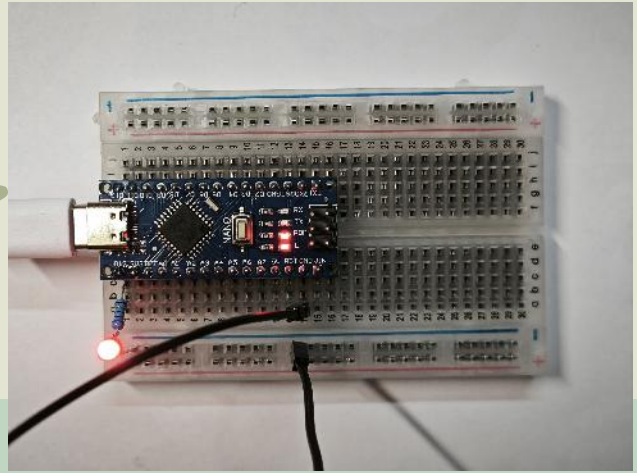

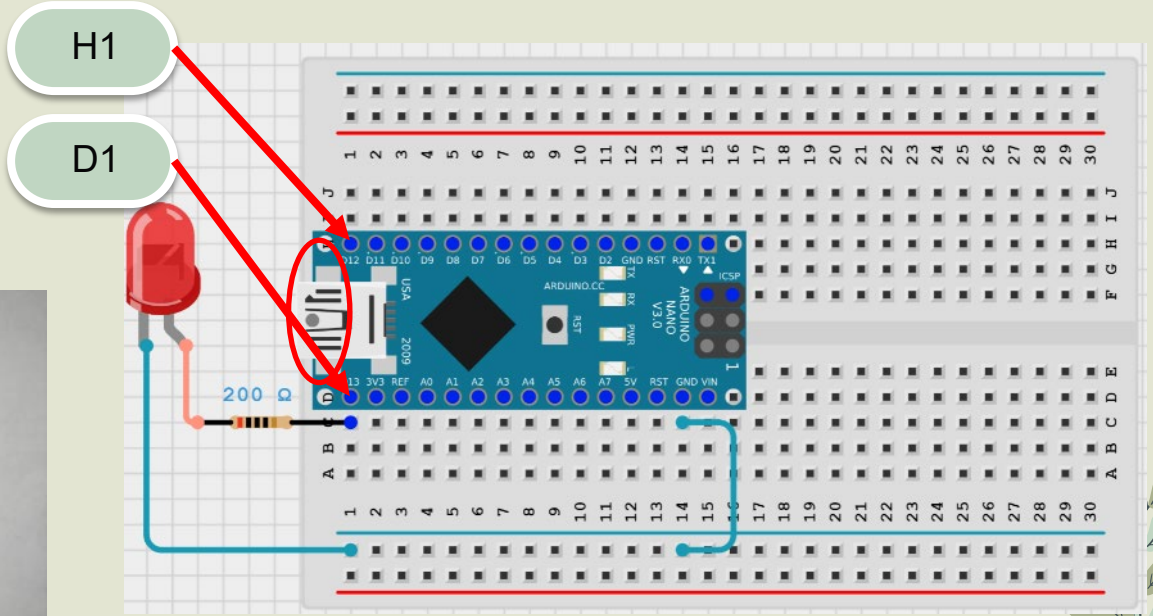

```
string sInput;
int iLength, iN;
double dblTemp;
bool again = true;

while (again) {
    iN = -1;
    again = false;
    getline(cin, sInput);
    system("cls");
    stringstream(sInput) >> dblTemp;
    iLength = sInput.length();
    if (iLength < 4) {
        again = true;
        continue;
    } else if (sInput[iLength - 3] != '.') {
        again = true;
        continue;
    } while (++iN < iLength) {
        if (isdigit(sInput[iN])) {
            continue;
        } else if (iN == (iLength - 3) ) {
            continue;
```

08 Coding

sketch_may12a | Arduino IDE 2.3.6

File Edit Sketch Tools Help

Arduino Nano

sketch_may12a.ino

```
void setup() {
  // put your setup code here, to run once:

}

void loop() {
  // put your main code here, to run repeatedly:

}
```

Ln 1, Col 1 Arduino Nano on COM6 [not connected]

打啲嘢！

Type something here!

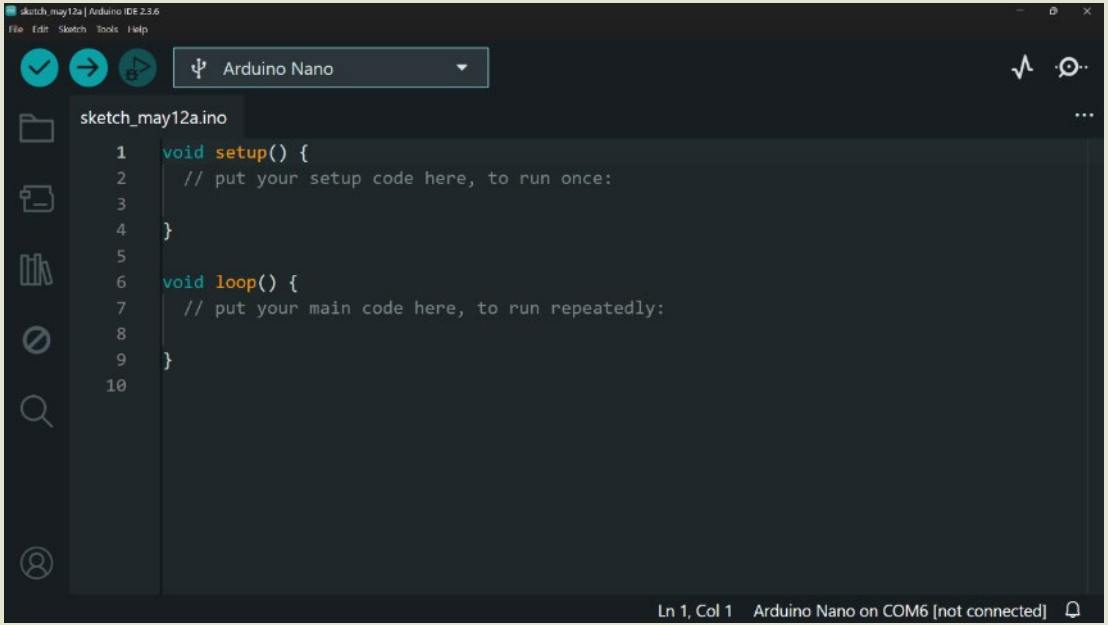

sketch_may12a | Arduino IDE 2.3.6

File Edit Sketch Tools Help

Arduino Nano

sketch_may12a.ino

```
int led_pin = 13;

void setup() {
  // put your setup code here, to run once:
  pinMode(led_pin, OUTPUT);
}

void loop() {
  // put your main code here, to run repeatedly:
  digitalWrite(led_pin,HIGH);
  delay(500);
  digitalWrite(led_pin,LOW);
  delay(500);
}
```

控制第十三個pin(針腳)

設訂第十三個pin做輸出模式

開LED for 500ms

熄LED for 500ms

記得要Save!

Ln 13, Col 14 Arduino Nano on COM6 [not connected]

sketch_may12a | Arduino IDE 2.3.6

File Edit Sketch Tools Help

Arduino Nano

sketch_may12a.ino

```
int led_pin = 13;

void setup() {
  // put your setup code here, to run o
  pinMode(led_pin, OUTPUT);
}

```

sketch_may12a | Arduino IDE 2.3.6

File Edit Sketch Tools Help

Arduino Nano

sketch_may12a.ino

```
int led_pin = 13;

void setup() {
  // put your setup code here, to run once:
  pinMode(led_pin, OUTPUT);
}

void loop() {
  // put your main code here, to run repeatedly:
  digitalWrite(led_pin,HIGH);
```

Output

```
Global variables use 9 bytes (0%) of dynamic memory, leaving 2039 bytes for local variables. Max
avrdude: ser_open(): can't op

Failed uploading: uploading e
```

Upload error: Failed uploading: uploading error: exit status 1

COPY ERROR MESSAGES

Arduino Nano on COM6 [not connected] 2

Part_1 | Arduino IDE 2.3.6

File Edit Sketch Tools Help

Arduino Nano

Arduino Nano
COM6

Arduino Nano 33 BLE
COM8

Arduino Nano Every
COM4

Select other board and port...

Part_1.ino

```
1  i
2
3  v
4                    to run once:
5
6  }
7
8  v
9                    o run repeatedly:
10 digitalWrite(led_pin,HIGH);
```

Output

```
Sketch uses 940 bytes (3%) of program storage space. Maximum is 30720 bytes.
Global variables use 9 bytes (0%) of dynamic memory, leaving 2039 bytes for local variables. Max
```

Ln 5, Col 14 Arduino Nano on COM6 4

Part_1 | Arduino IDE 2.3.6

File Edit Sketch Tools Help

Select Other Board and Port

Select both a Board and a Port if you want to upload a sketch.
If you only select a Board you will be able to compile, but not to upload your sketch.

BOARDS

Search board

NO BOARDS FOUND FOR ""

PORTS

COM6 Serial Port (USB)

COM8 Serial Port

Show all ports

CANCEL OK

is 3072
2039 by

Ln 5, Col 14 Arduino Nano on COM6 4

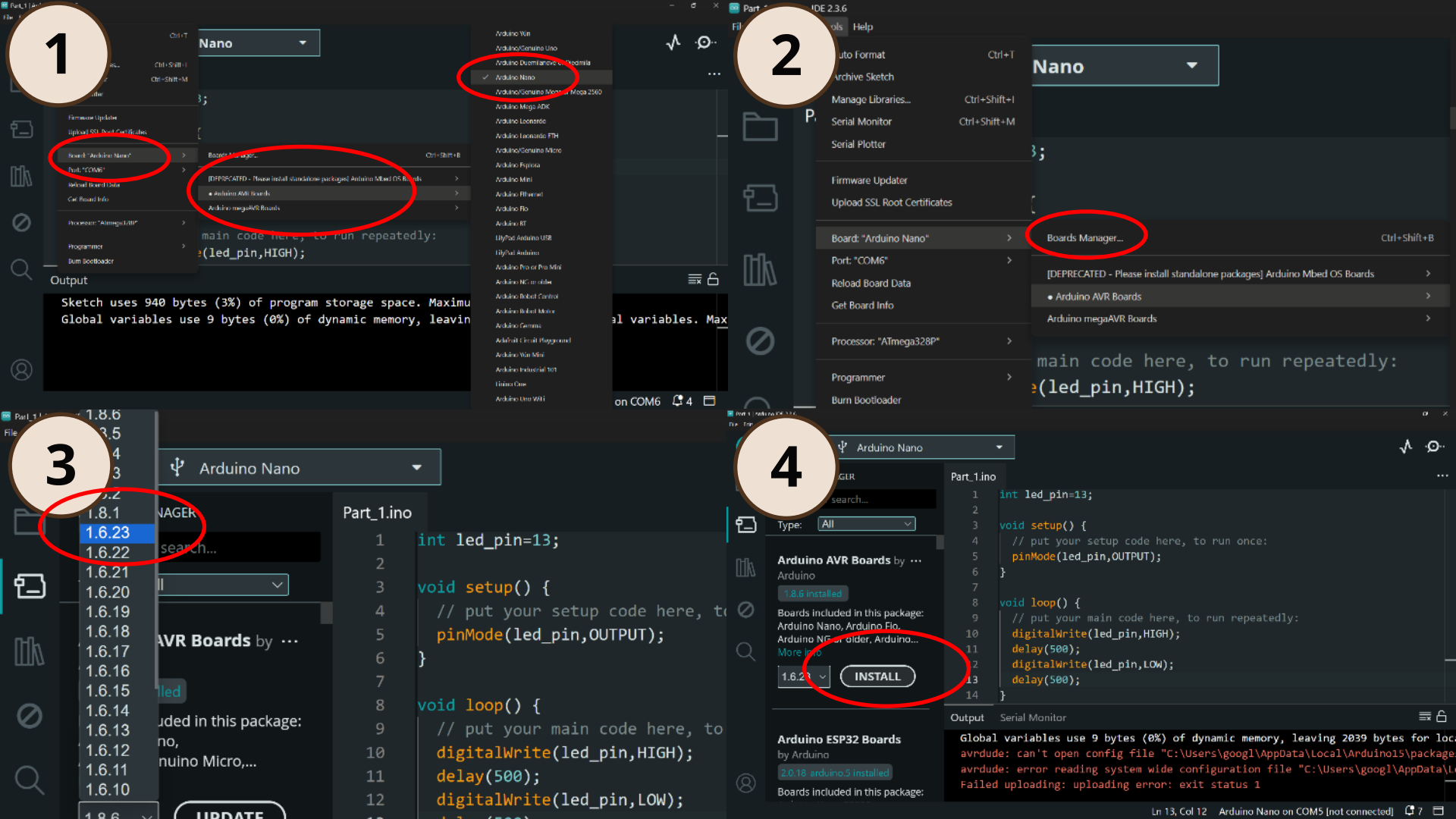
1
Nano
Arduino Nano
Arduino Nano
Arduino Mega ADK
Arduino Leonardo
Arduino Leonardo ETH
Arduino/Genuino Micro
Arduino Esplora
Arduino Mini
Arduino Ethernet
Arduino Fio
Arduino BT
LilyPad Arduino USB
Arduino Pro or Pro Mini
Arduino Robot Control
Arduino Robot Motor
Arduino Gemma
Adafruit Circuit Playground
Arduino Yún Mini
Arduino Industrial 101
Linino One
Arduino Uno WiFi
Firmware Updater
Upload SSL Root Certificates
Board: "Arduino Nano"
Port: "COM6"
Reload Board Data
Get Board Info
Processor: "ATmega328P"
Programmer
Burn Bootloader
Boards Manager...
Ctrl+Shift+B
[DEPRECATED - Please install standalone packages] Arduino Mbed OS Boards
Arduino AVR Boards
Arduino megaAVR Boards
Output
Sketch uses 940 bytes (3%) of program storage space. Maximu
Global variables use 9 bytes (0%) of dynamic memory, leavin
on COM6
2
Nano
Auto Format
Ctrl+T
Archive Sketch
Manage Libraries...
Ctrl+Shift+I
Serial Monitor
Ctrl+Shift+M
Serial Plotter
Firmware Updater
Upload SSL Root Certificates
Board: "Arduino Nano"
Port: "COM6"
Reload Board Data
Get Board Info
Processor: "ATmega328P"
Programmer
Burn Bootloader
Boards Manager...
Ctrl+Shift+B
[DEPRECATED - Please install standalone packages] Arduino Mbed OS Boards
Arduino AVR Boards
Arduino megaAVR Boards
main code here, to run repeatedly:
(led_pin,HIGH);
3
Arduino Nano
1.8.6
1.8.5
1.8.4
1.8.3
1.8.1
1.6.23
1.6.22
1.6.21
1.6.20
1.6.19
1.6.18
1.6.17
1.6.16
1.6.15
1.6.14
1.6.13
1.6.12
1.6.11
1.6.10
UPDATE
Part_1.ino
int led_pin=13;
void setup() {
// put your setup code here, to
pinMode(led_pin,OUTPUT);
}
void loop() {
// put your main code here, to
digitalWrite(led_pin,HIGH);
delay(500);
digitalWrite(led_pin,LOW);
4
Arduino Nano
Type: All
Arduino AVR Boards by
Arduino
1.8.6 installed
Boards included in this package:
Arduino Nano, Arduino Fio,
More info
1.6.23
INSTALL
Arduino ESP32 Boards
by Arduino
2.0.18-arduino.5 installed
Boards included in this package:
Part_1.ino
int led_pin=13;
void setup() {
// put your setup code here, to run once:
pinMode(led_pin,OUTPUT);
}
void loop() {
// put your main code here, to run repeatedly:
digitalWrite(led_pin,HIGH);
delay(500);
digitalWrite(led_pin,LOW);
delay(500);
}
Output
Serial Monitor
Global variables use 9 bytes (0%) of dynamic memory, leaving 2039 bytes for loc
avrdude: can't open config file "C:\Users\googl\AppData\Local\Arduino15\package
avrdude: error reading system wide configuration file "C:\Users\googl\AppData\L
Failed uploading: uploading error: exit status 1
Ln 13, Col 12
Arduino Nano on COM5 [not connected]

Part 2

智能地板能源收集系統

Smart Flooring for Energy Harvesting

Part 2 – 智能地板能源收集系統
Smart Flooring for Energy Harvesting

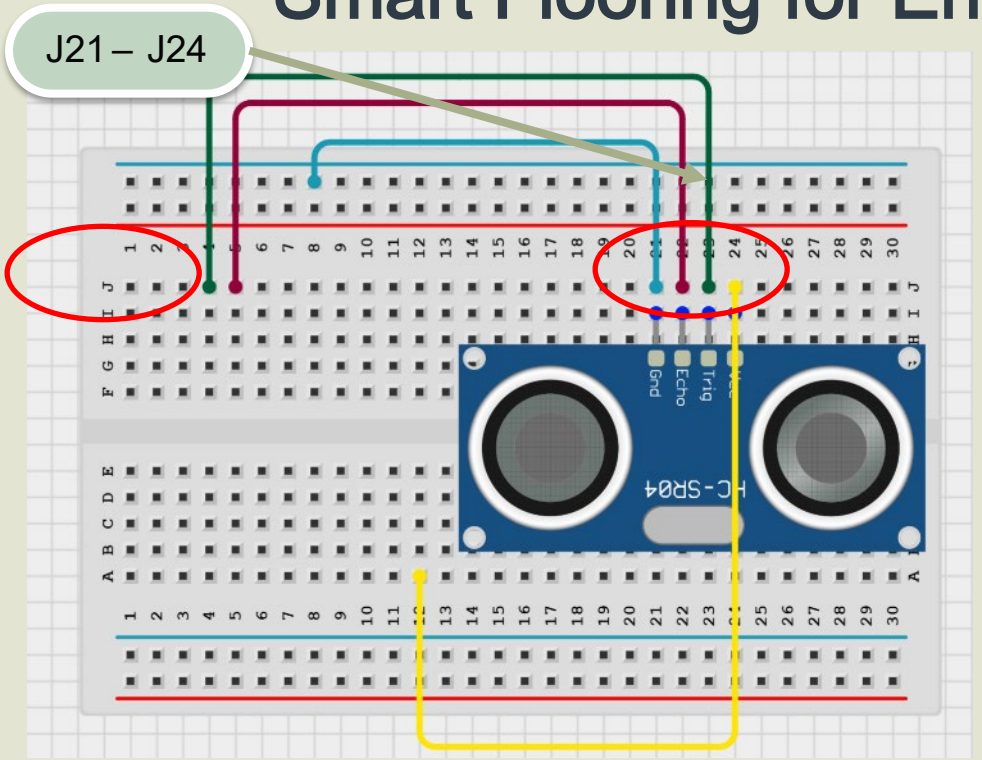

Ultrasonic Sensor 超聲波感測器 (HC-SR04)

Component 元件	Pin/Wire Connection 引腳/連接	Arduino Pin/Breadboard Row Arduino 接腳/麵包板
Trig Pin 觸發引腳	**D8**	Connected to Arduino pin D7 連接到 Arduino D7 接腳
Echo Pin 回波引腳	**D7**	Connected to Arduino pin D8 連接到 Arduino D8 接腳
VCC	5V (A12 in breadboard)	Connected to +
GND	GND (Upper section –)	Connected to -

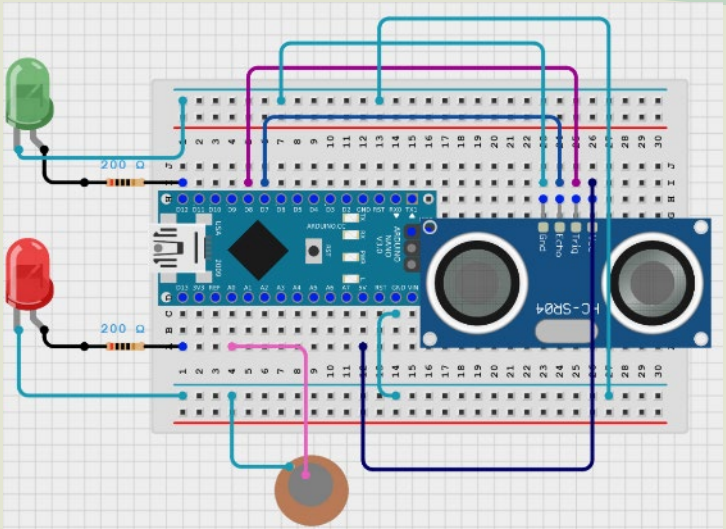

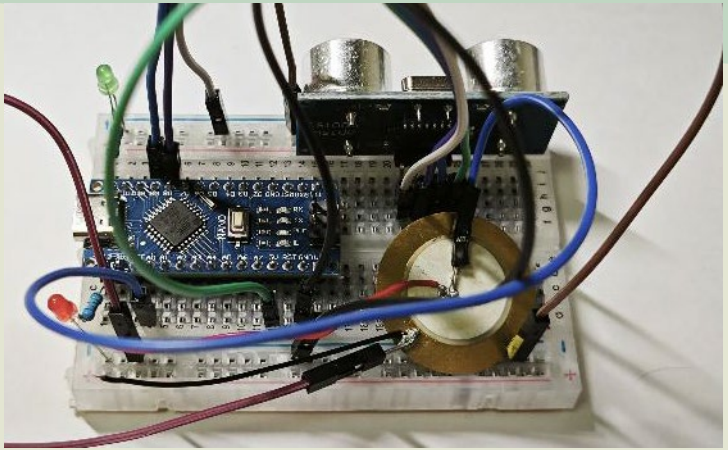

Red LED 紅色 LED		
Positive (long leg) 正極（長腳）	Resistor → D13 電阻 → D13	Connected via resistor to pin D13 通過電阻連接到 D13 接腳
Negative (short leg) 負極（短腳）	GND	Connected to GND rail 連接到 GND 排
Blue LED 藍色 LED		
Positive (long leg) 正極（長腳）	Resistor → D12 電阻 → D12	Connected via resistor to pin D12 通過電阻連接到 D12 接腳
Negative (short leg) 負極（短腳）	GND	Connected to GND rail 連接到 GND 排

Piezoelectric Sensor 壓電感測器		
Positive 正極	A0	Connected to pin A0 連接到 A0 接腳
Negative 負極	GND	Connected to GND rail 連接到 GND 排
Power/Breadboard 電源/麵包板		
Positive Rail 正電排	5V	Connected to Arduino 5V pin 連接到 Arduino 5V 接腳
Negative Rail 負電排	GND	Connected to Arduino GND pin 連接到 Arduino GND 接腳

Part_2 | Arduino IDE 2.3.6

File Edit Sketch Tools Help

Arduino Nano

Part_2.ino

```
const int echoPin = 8;
const int trigPin = 9;
const int sensorPin = A0;
int sensorValue = 0;
const int ledRed = 13;
const int ledGreen = 12;
const int threshold = 400;

void setup() {
  // initialize serial communication:
  Serial.begin(9600);
  pinMode(trigPin,OUTPUT);
  pinMode(echoPin,INPUT);
  pinMode(ledRed,OUTPUT);
  pinMode(ledGreen,OUTPUT);
}

void loop() {
  long duration, inches, cm;
  sensorValue = analogRead(sensorPin);
  Serial.println(sensorValue);

  digitalWrite(trigPin, LOW);
  delayMicroseconds(2);
  digitalWrite(trigPin, HIGH);
  delayMicroseconds(10);
  digitalWrite(trigPin, LOW);

  duration = pulseIn(echoPin, HIGH);
```

Output

Part_2 | Arduino IDE 2.3.6

File Edit Sketch Tools Help

Arduino Nano

Part_2.ino

```
  inches = microsecondsToInches(duration);
  cm = microsecondsToCentimeters(duration);

  Serial.print(inches);
  Serial.print("in, ");
  Serial.print(cm);
  Serial.print("cm");
  Serial.println();
  delay(100);

  if (cm <= 20) {
  digitalWrite(ledRed, HIGH);
  digitalWrite(ledGreen, LOW);
  } else if (sensorValue > threshold) {
  digitalWrite(ledGreen, HIGH);
  digitalWrite(ledRed, LOW);
  } else {
  digitalWrite(ledRed, LOW);
  digitalWrite(ledGreen, LOW);
  }
}

long microsecondsToInches(long microseconds) {
  return microseconds / 74 / 2;
}

long microsecondsToCentimeters(long microseconds) {
  return microseconds / 29 / 2;
}
```

Output

Sketch uses 2858 bytes (9%) of program storage space. Maximum is 30720 byte

Global variables use 198 bytes (9%) of dynamic memory, leaving 1850 bytes f

```
1  const int echoPin = 8;
2  const int trigPin = 9;
3  const int sensorPin = A0;
4  int sensorValue = 0;
5  const int ledRed = 13;
6  const int ledGreen = 12;
7  const int threshold = 400;
8
9  void setup() {
10   // initialize serial communication:
11   Serial.begin(9600);
12   pinMode(trigPin,OUTPUT);
13   pinMode(echoPin,INPUT);
14   pinMode(ledRed,OUTPUT);
15   pinMode(ledGreen,OUTPUT);
16 }
17
18 void loop() {
19   long duration, inches, cm;
20   sensorValue = analogRead(sensorPin);
21   Serial.println(sensorValue);
22
23   digitalWrite(trigPin, LOW);
24   delayMicroseconds(2);
25   digitalWrite(trigPin, HIGH);
26   delayMicroseconds(10);
27   digitalWrite(trigPin, LOW);
28
29   duration = pulseIn(echoPin, HIGH);
30   inches = microsecondsToInches(duration);
31   cm = microsecondsToCentimeters(duration);
32
33   Serial.print(inches);
34   Serial.print("in, ");
35   Serial.print(cm);
36   Serial.print("cm");
37   Serial.println();
38   delay(100);
39
40   if (cm <= 20) {
41   digitalWrite(ledRed, HIGH);
42   digitalWrite(ledGreen, LOW);
43   } else if (sensorValue > threshold) {
44   digitalWrite(ledGreen, HIGH);
45   digitalWrite(ledRed, LOW);
46   } else {
47   digitalWrite(ledRed, LOW);
48   digitalWrite(ledGreen, LOW);
49   }
50 }
51
52 long microsecondsToInches(long microseconds) {
53   return microseconds / 74 / 2;
54 }
55
56 long microsecondsToCentimeters(long microseconds) {
57   return microseconds / 29 / 2;
58 }
```

定義第8個 pin 為超聲波回音針腳
定義第9個 pin 為超聲波回音針腳
定義 A0 為類比感測器的讀取針腳
初始化感測器數值為 0
定義第13個 pin 為紅燈針腳
定義第12個 pin 為綠燈針腳
定義感測器的閾值為 400
初始化串列通訊，設定鮑率為 9600
設定第 9 個 pin 為輸出模式
設定第 8 個 pin 為輸入模式
設定第 13 個 pin 為輸出模式（控制紅燈）
設定第 12 個 pin 為輸出模式（控制綠燈）
定義變數儲存距離和時間
從感測器讀取數值
顯示感測器數值於串列監視器
觸發腳位先保持低電壓
延遲 2 微秒
觸發腳位輸出高電壓
延遲 10 微秒
再次設為低電壓
測量回音信號持續時間
將時間轉換為英吋 & 公分距離
印出距離（英吋）
印出距離（公分）
延遲 100 毫秒
若距離小於或等於 20 公分
開啟紅燈
關閉綠燈
若感測器數值大於閾值
開啟綠燈
關閉紅燈
否則
關閉紅燈
關閉綠燈

Serial Monitor 序列監視器

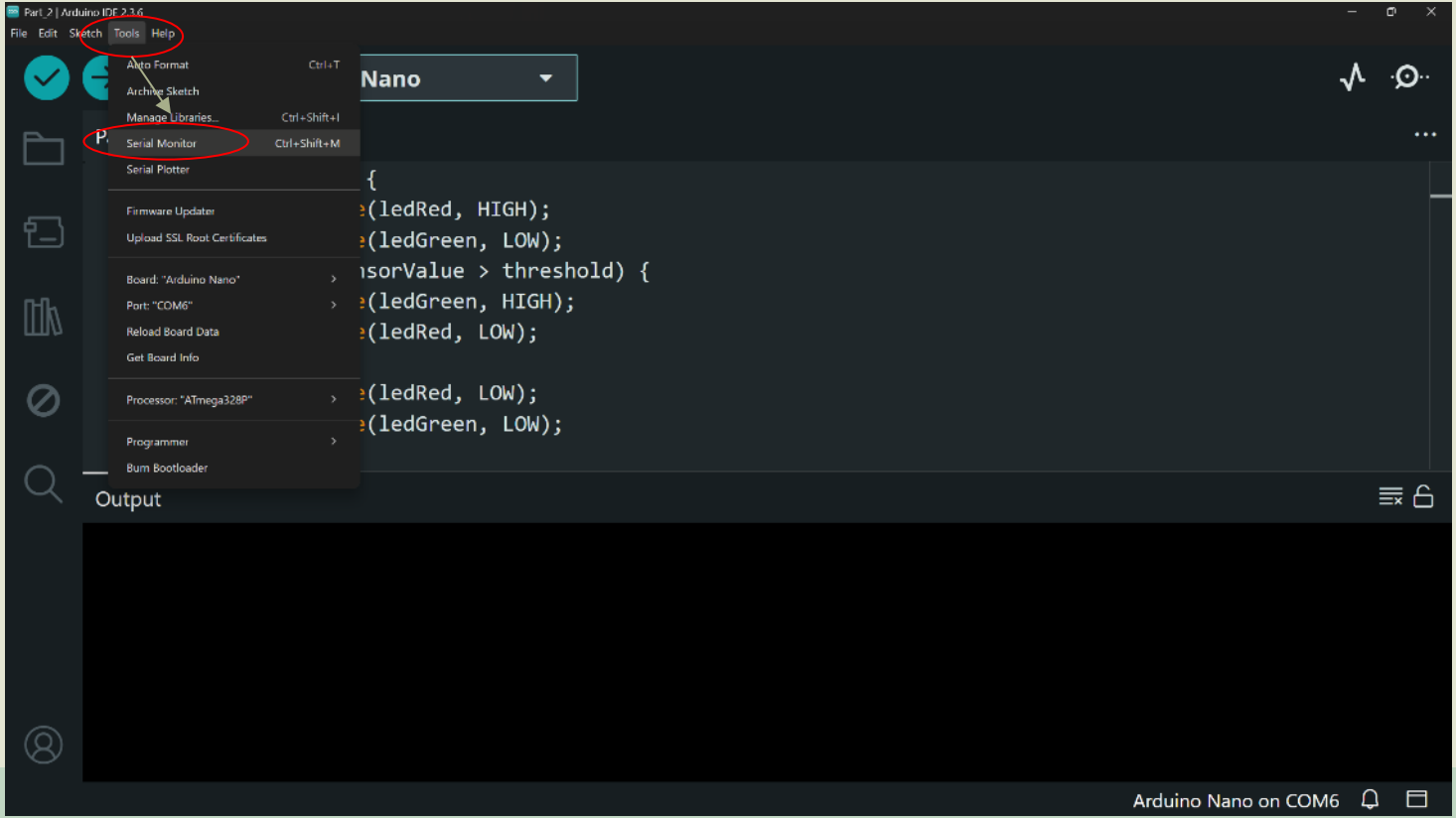

Serial Monitor 序列監視器

Part_2 | Arduino IDE 2.3.6

File Edit Sketch Tools Help

Arduino Nano

Part_2.ino

```
const int echoPin = 8;
const int trigPin = 9;
const int sensorPin = A0;
int sensorValue = 0;
const int ledRed = 13;
const int ledGreen = 12;
const int threshold = 400;

void setup() {
  // initialize serial communication:
  Serial.begin(9600);
  pinMode(trigPin,OUTPUT);
  pinMode(echoPin,INPUT);
  pinMode(ledRed,OUTPUT);
  pinMode(ledGreen,OUTPUT);
}

void loop() {
  long duration, inches, cm;
  sensorValue = analogRead(sensorPin);
```

Output Serial Monitor

Message (Enter to send message to 'Arduino Nano' on 'COM6')

Carriage Return

4800 baud

1200 baud
2400 baud
4800 baud
9600 baud
19200 baud

Arduino Nano on COM6

Part_2 | Arduino IDE 2.3.6

File Edit Sketch Tools Help

Arduino Nano

Part_2.ino

```
8
9   void setup() {
10    // initialize serial communication:
11    Serial.begin(9600);
12    pinMode(trigPin,OUTPUT);
13    pinMode(echoPin,INPUT);
14    pinMode(ledRed,OUTPUT);
15    pinMode(ledGreen,OUTPUT);
16  }
17
```

Output Serial Monitor

Message (Enter to send message to 'Arduino Nano' on 'COM6')

Carriage Return 9600 baud

```
0
15in, 38cm
0
15in, 38cm
0
15in, 38cm
```

Arduino Nano on COM6

什麼是Baud（鮑率）？ What is "Baud" in Arduino?

- Baud 是指在通信系統中傳輸數據的速率。

Baud is the rate at which data is transmitted in a communication system.

- **在 Arduino 中**：它表示通過串行通信（例如串行監視器）發送或接收數據的速度。

In Arduino: It refers to how fast the data is sent or received via the Serial communication (e.g., Serial Monitor).

- **單位是每秒傳輸位數（bps）**。範例：

Measured in bits per second (bps). Examples:

  - **9600 baud**：每秒傳輸或接收 9600 個位元。

  9600 baud: 9600 bits sent/received per second.

  - **115200 baud**：每秒傳輸或接收 115200 個位元。

  115200 baud: 115200 bits sent/received per second.

為什麼 Baud Rate 很重要？

Why is Baud Rate Important?

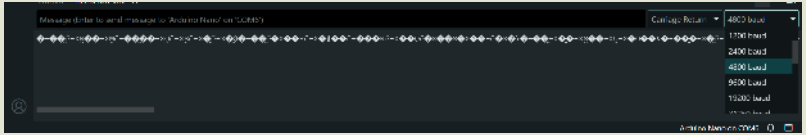

- Arduino 和串行監視器的 **baud rate 必須一致**，才能正常通信。

The **baud rate** of your Arduino and Serial Monitor must match for proper communication.

- 如果速率不匹配，您會看到 **亂碼** 或錯誤。

If the rates don't match, you'll see **garbled text** or errors.

Further Development – A More Complete Project

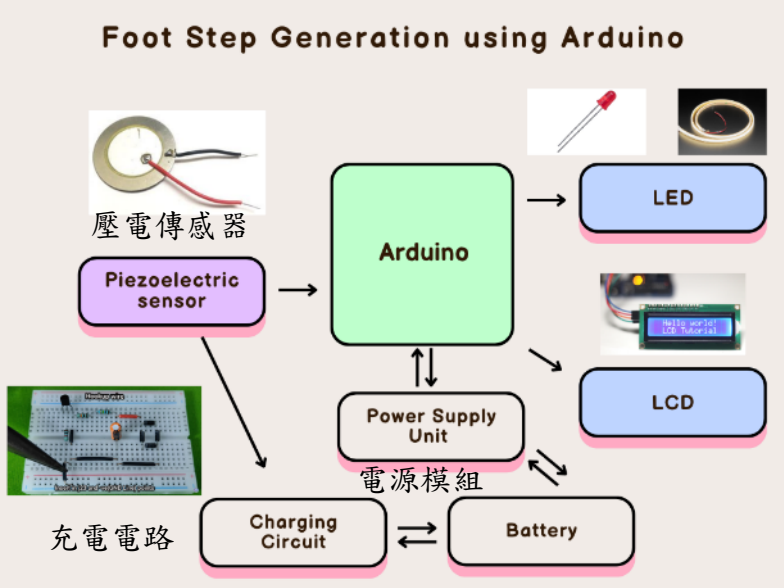

香港的超聲波感測器/壓電技術的應用

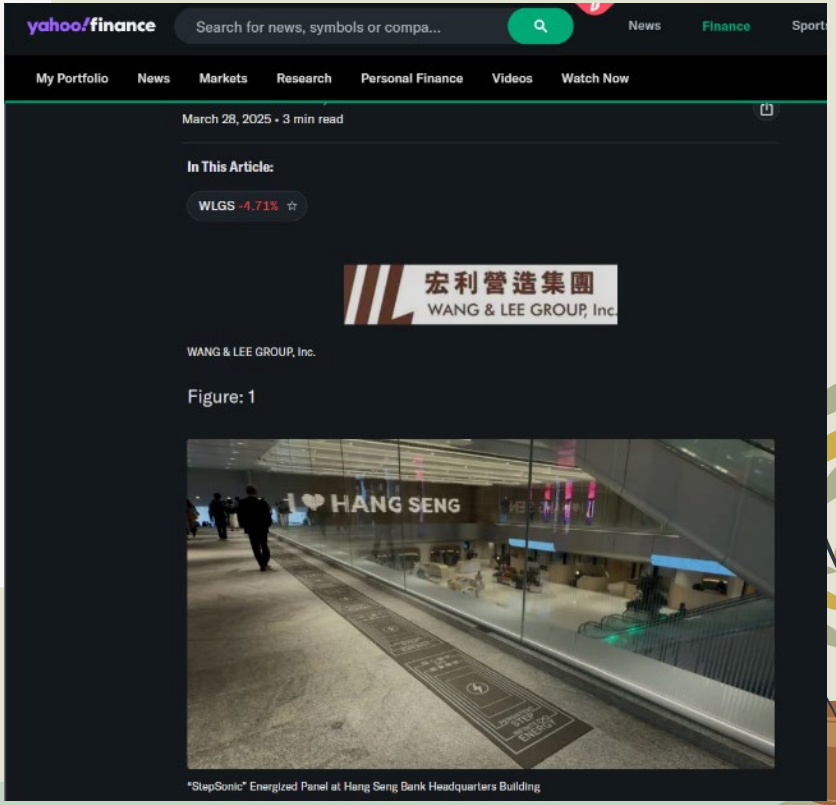

其他可再生能源！Other Renewable Energy

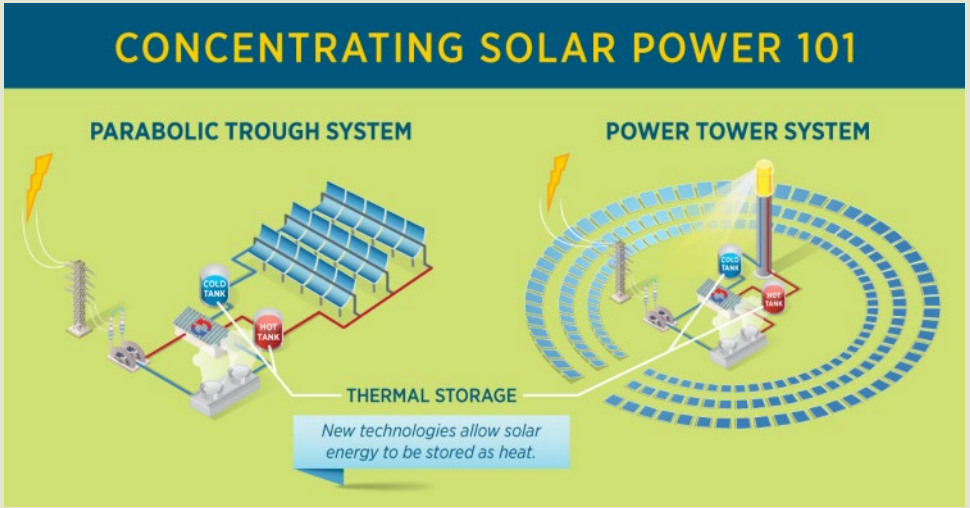

聚光太陽能熱發電

聚光太陽能熱發電利用鏡子或透鏡將陽光集中在小範圍內產生熱量，並將熱量轉換為電能。

Concentrated solar power (CSP) uses mirrors or lenses to focus sunlight onto a small area to generate heat, which is then converted into electricity.

Takeaway

- 這是一個**概念驗證**，但要產生可用的能源需要擴展到更大的系統

While this is a **proof of concept**, generating usable energy requires scaling up to a larger system.

- 擴展規模是關鍵，就像在**太陽能**、**風能**和**藻類轉化燃料**技術中一樣

Scaling is key, just like in **solar**, **wind**, and **algae-to-fuel** technologies.

- 思考如何應用於現實世界並進行創新整合

Think about real-world applications and innovative integration

記住：創新始於小規模，但隨時可擴展並成長。

Remember: Innovation starts small but grows with scalable ideas.

進一步開發的工具
Tools for further Development ~

Cirkit Designer

是一個設計和模擬電子電路的工具
is a tool for designing and simulating electronic circuits.

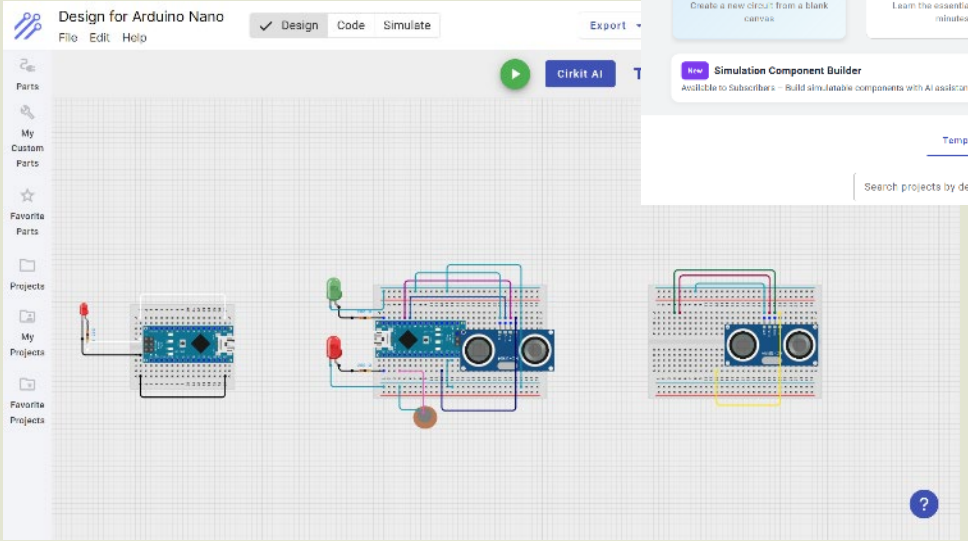

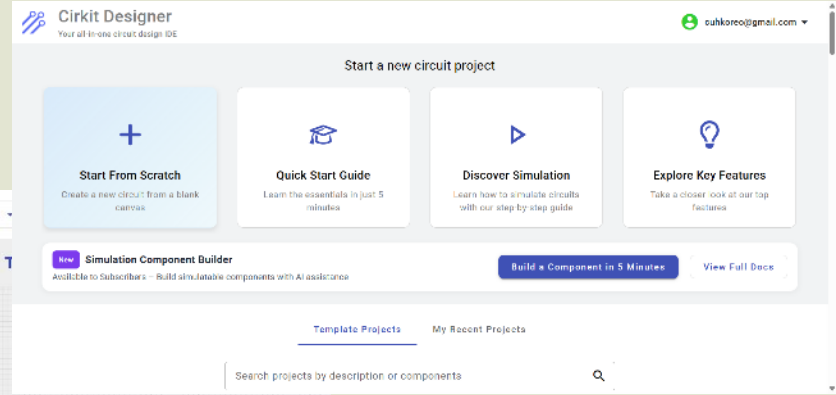

Online Arduino IDE – Tinkercad

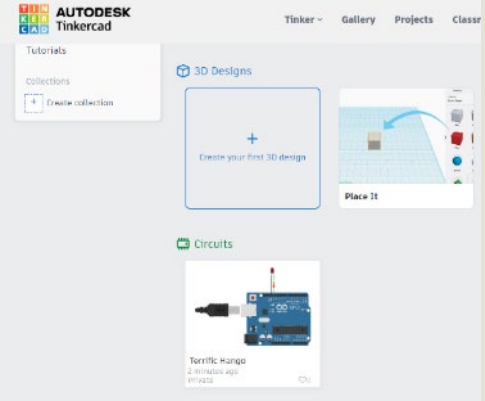

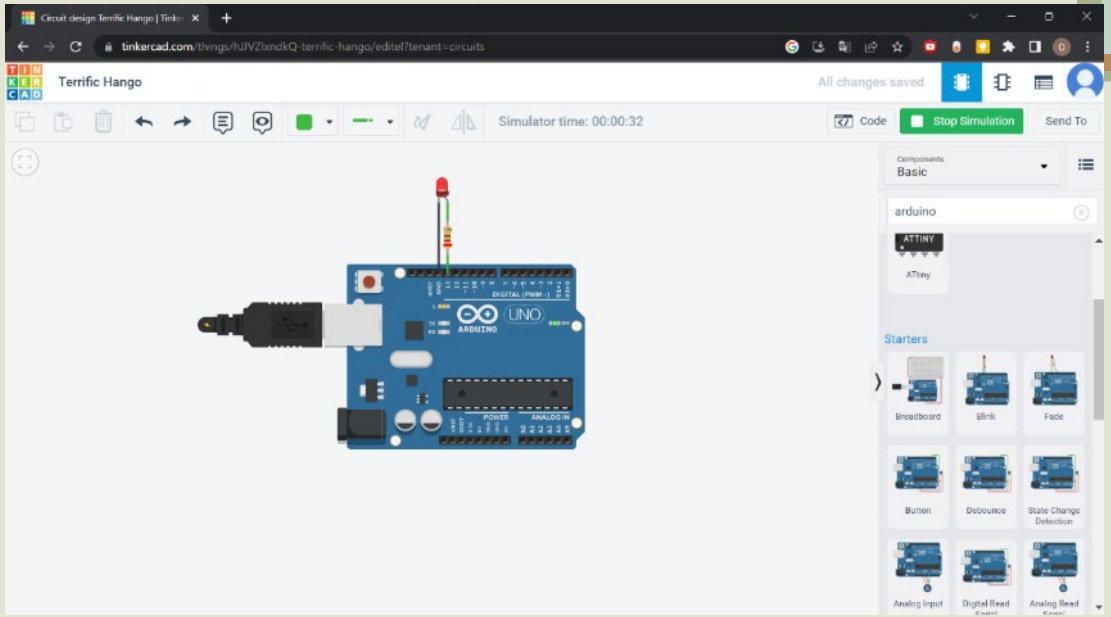

Online Arduino IDE – Arduino Cloud

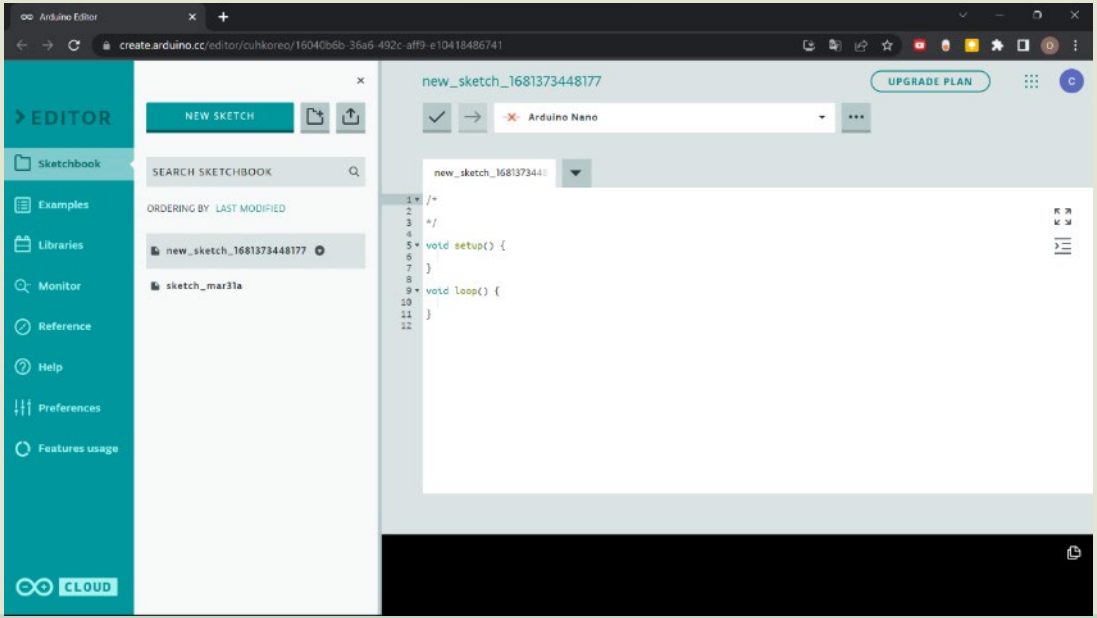

Online CAD (Computer Aid Design) - Onshape

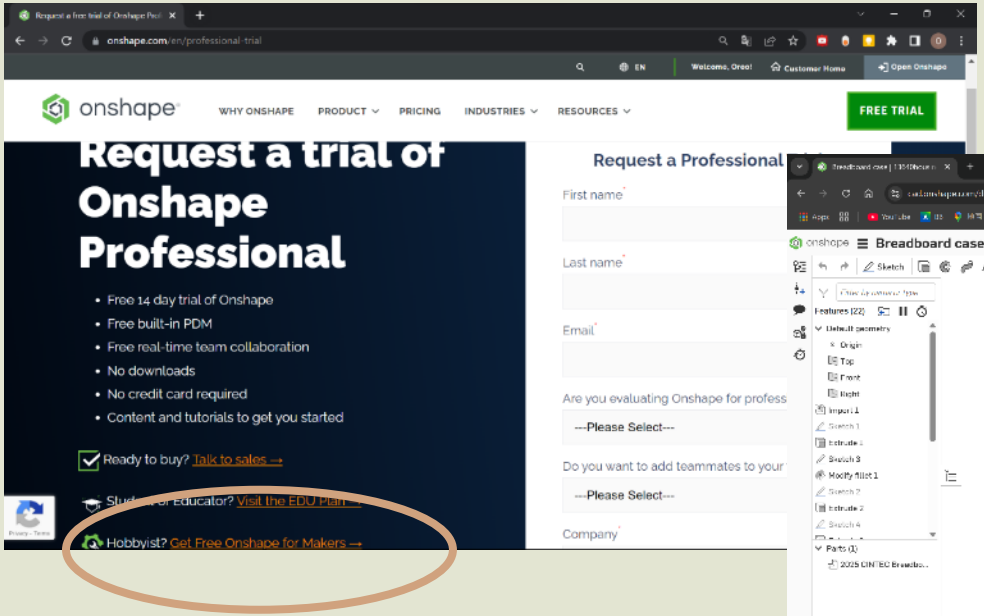

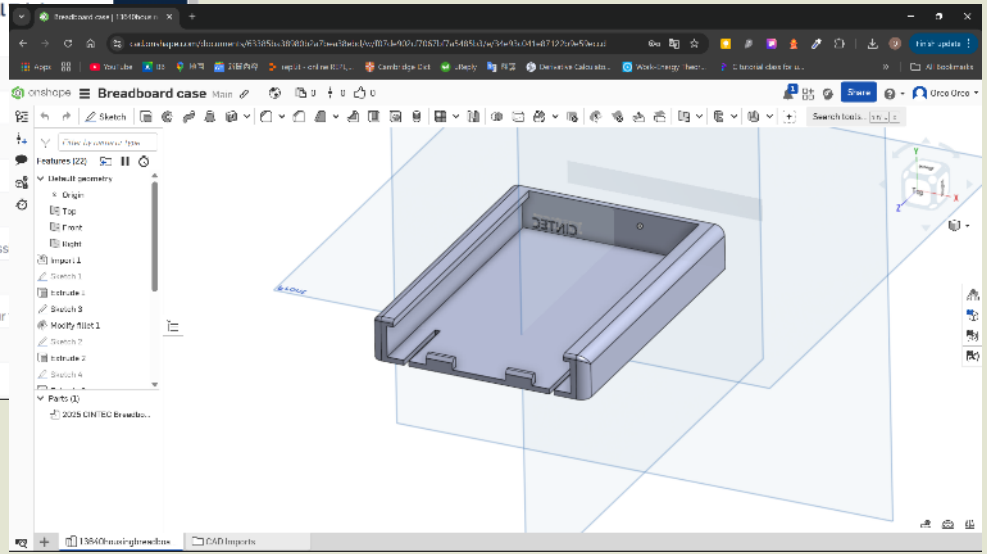

Thanks!

Do you have
any questions?