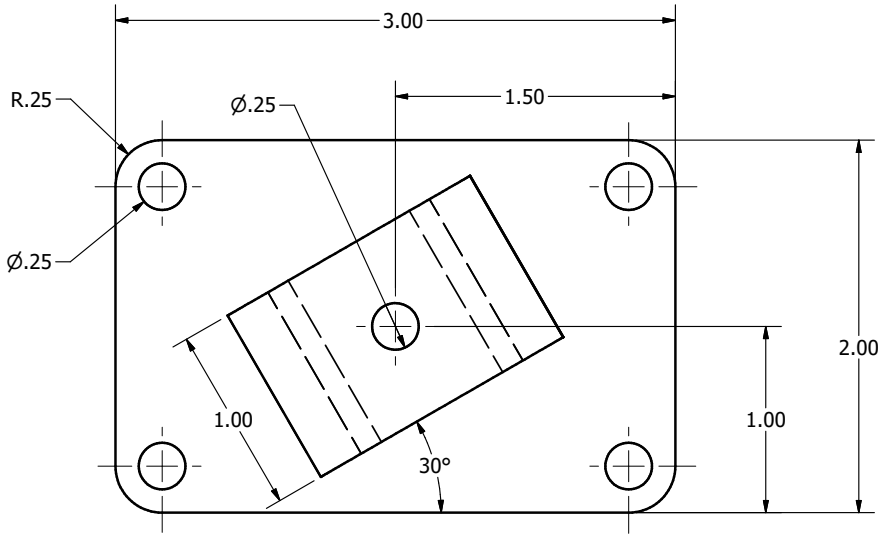

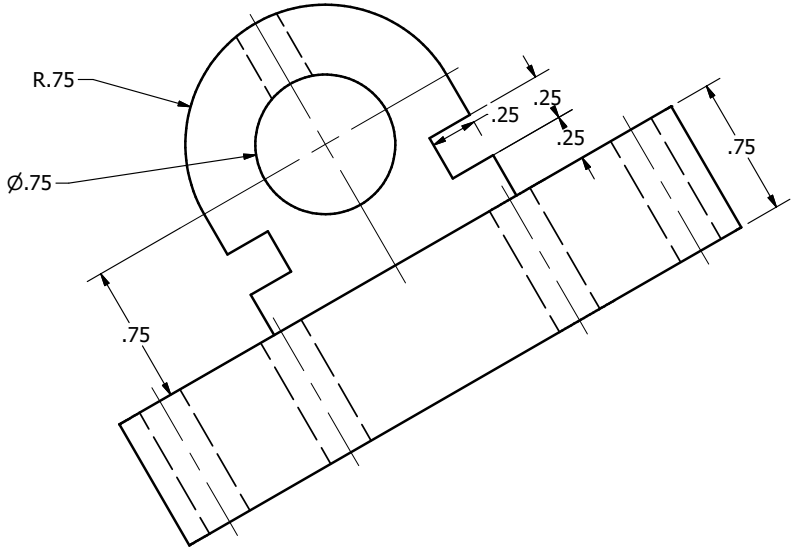

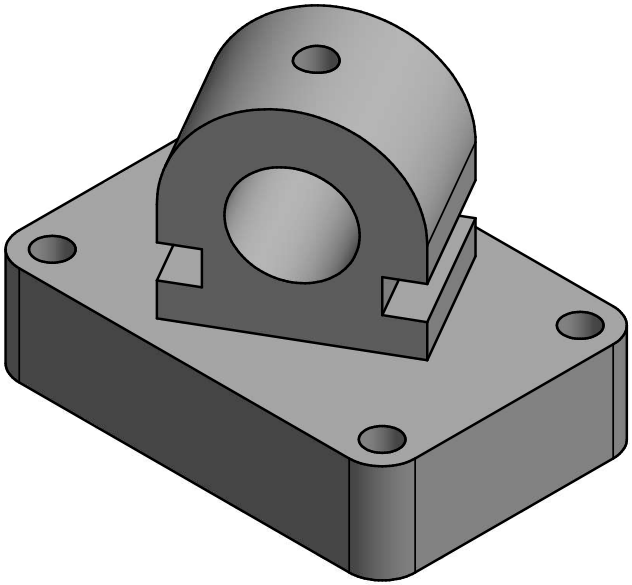

1. Rounds & Fillets: R .25

DRAWN jpb34	11/2/2018	
CHECKED Prof. Porter	11/8/2018	
QA		TITLE
MFG		
APPROVED		Shih 9 Tutorial
SIZE B	DWG NO Chpt9_Tutorial.idw	REV
SCALE 3:2	SHEET 1 OF 1	