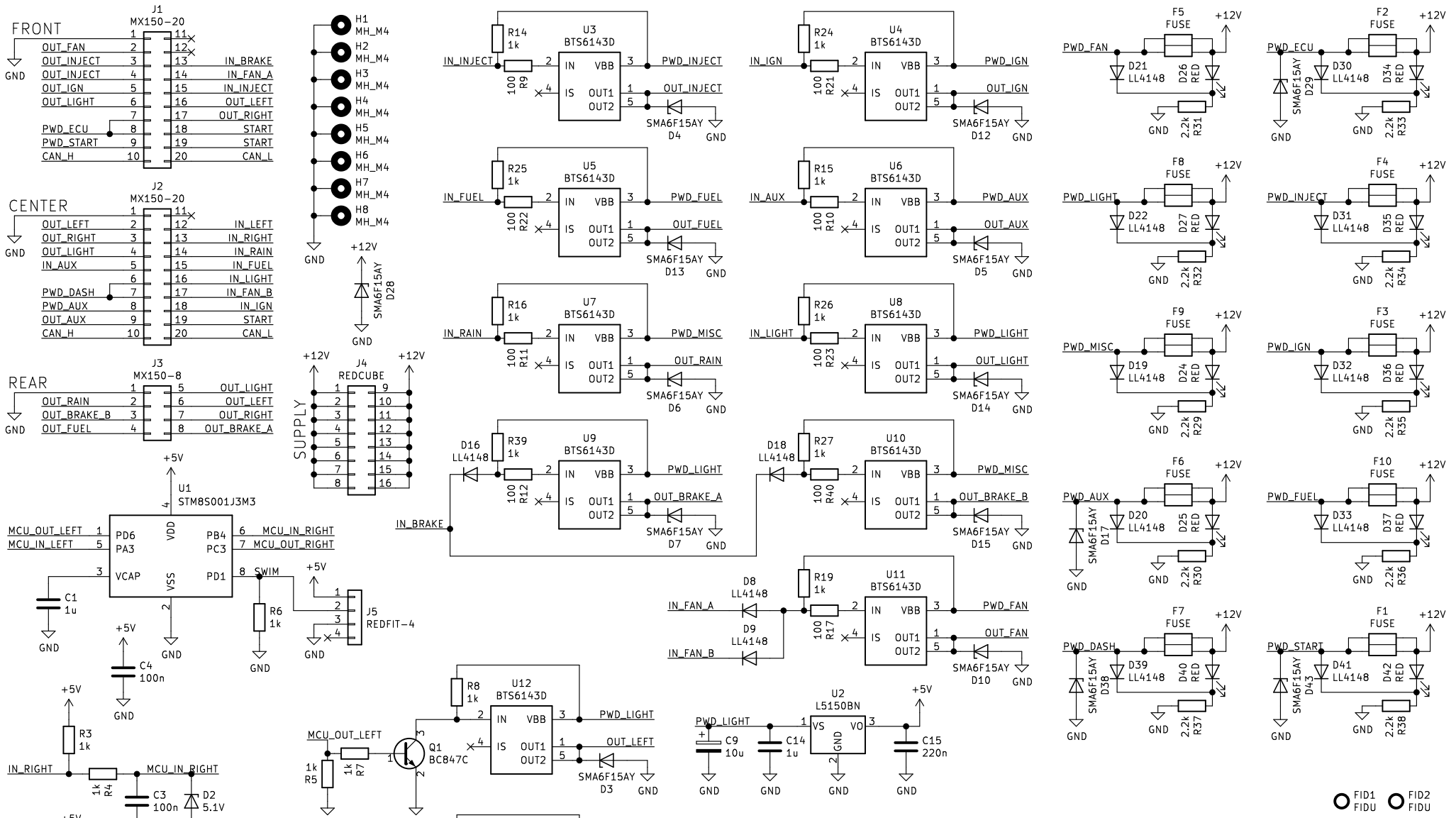

Power distribution unit for race cars
https://github.com/JacobNeergaard/powerunit/
Apache License 2.0

Sheet: /
File: PowerUnit.sch

Title: PowerUnit

Size: A4	Date: 2020-04-16	**Rev: B**
KiCad E.D.A. kicad (5.1.5-0-10_14)		Id: 1/1