5G NR Cell Phone RF System Design

5G NR / WiFi / Bluetooth /GNSS / NFC

- Feature:

-Support System: 5G NR-FR1 / 4G-LTE / 3G-UMTS

-Support ANT : 7

-Band:n1/n2/n3/n5/n7/n8/n12/n13/n25/n26/n28/n38/n40/n41/n66/n77/n78/n79

-ENDC: LB+MB/LB+HB/LB+UHB/MB+MB/MB+HB/MB+UHB/HB+HB/HB+UHB

-Rx 4 MIMO: n1/n2/n3/n7/n25/n38/n40/n41/n66/n77/n78/n79

-CA combination Set: 4 NR CA

-4 Tx SRS: n77/n78/n79

Tx Block Diagram

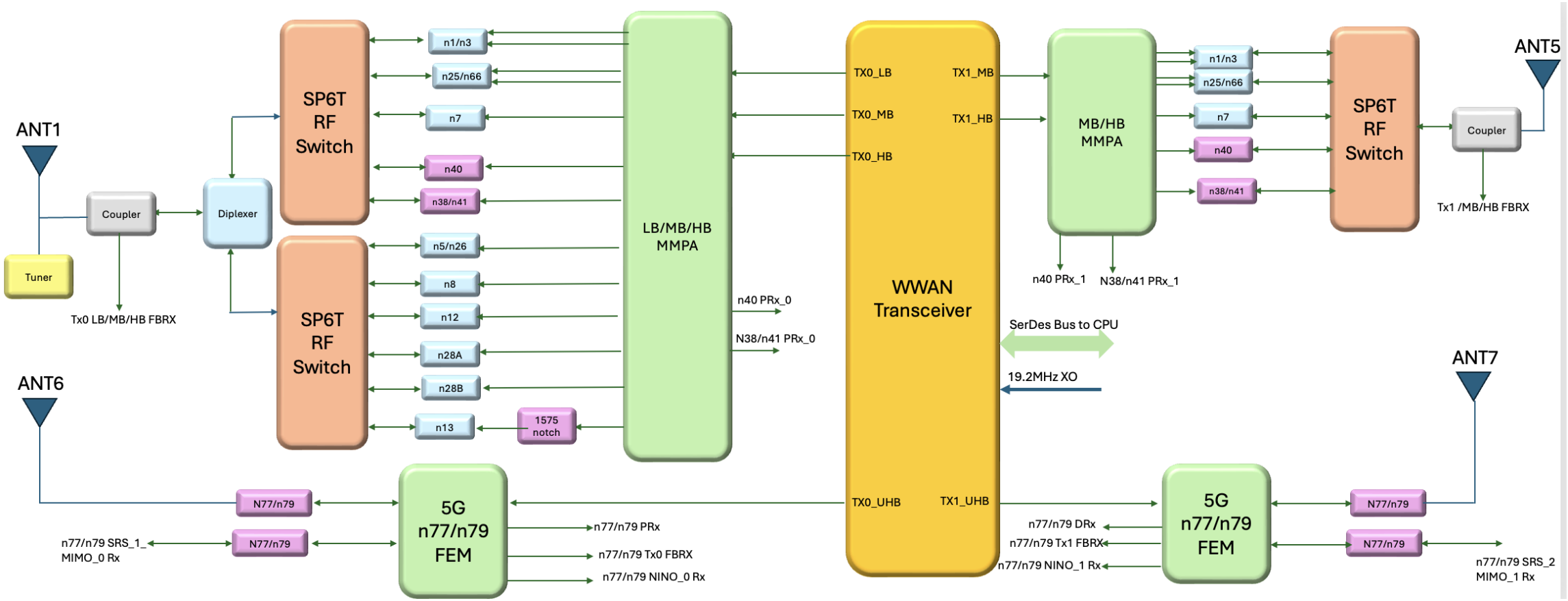

PRx / DRx/ MIMO Rx Block Diagram

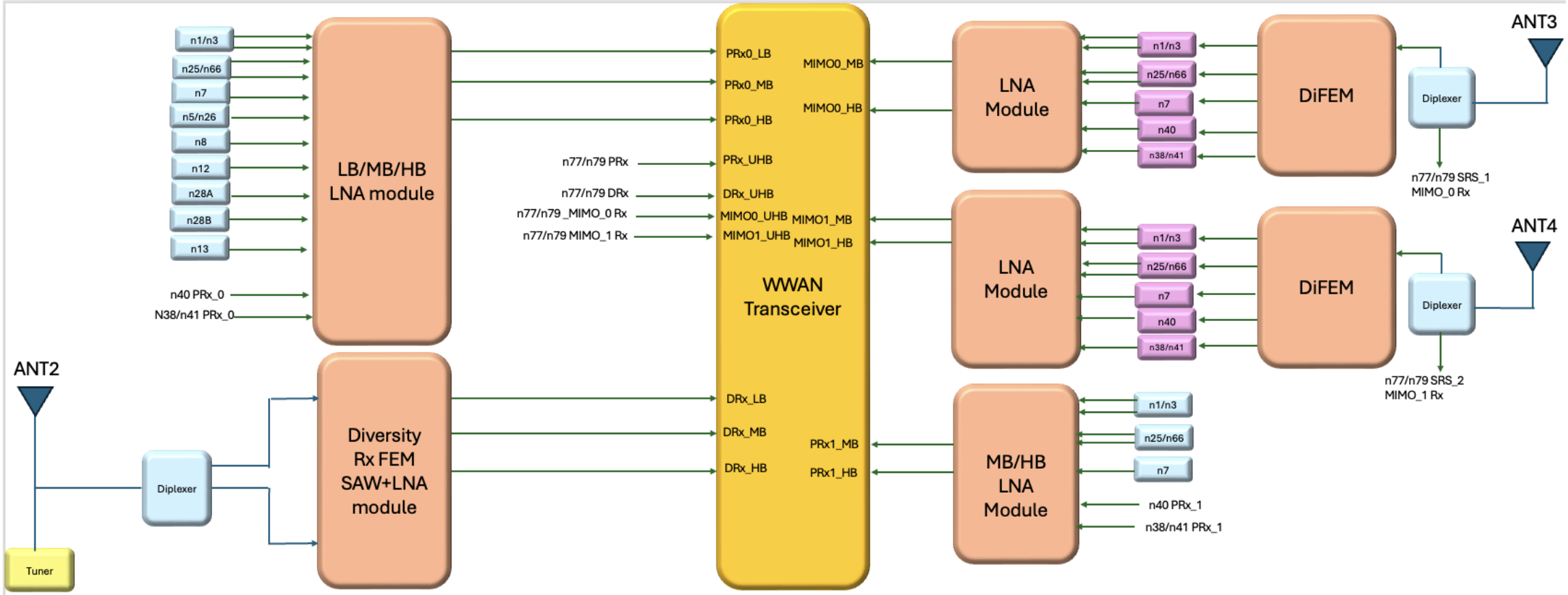

APT/ET Power and Tx Feedback Block Diagram

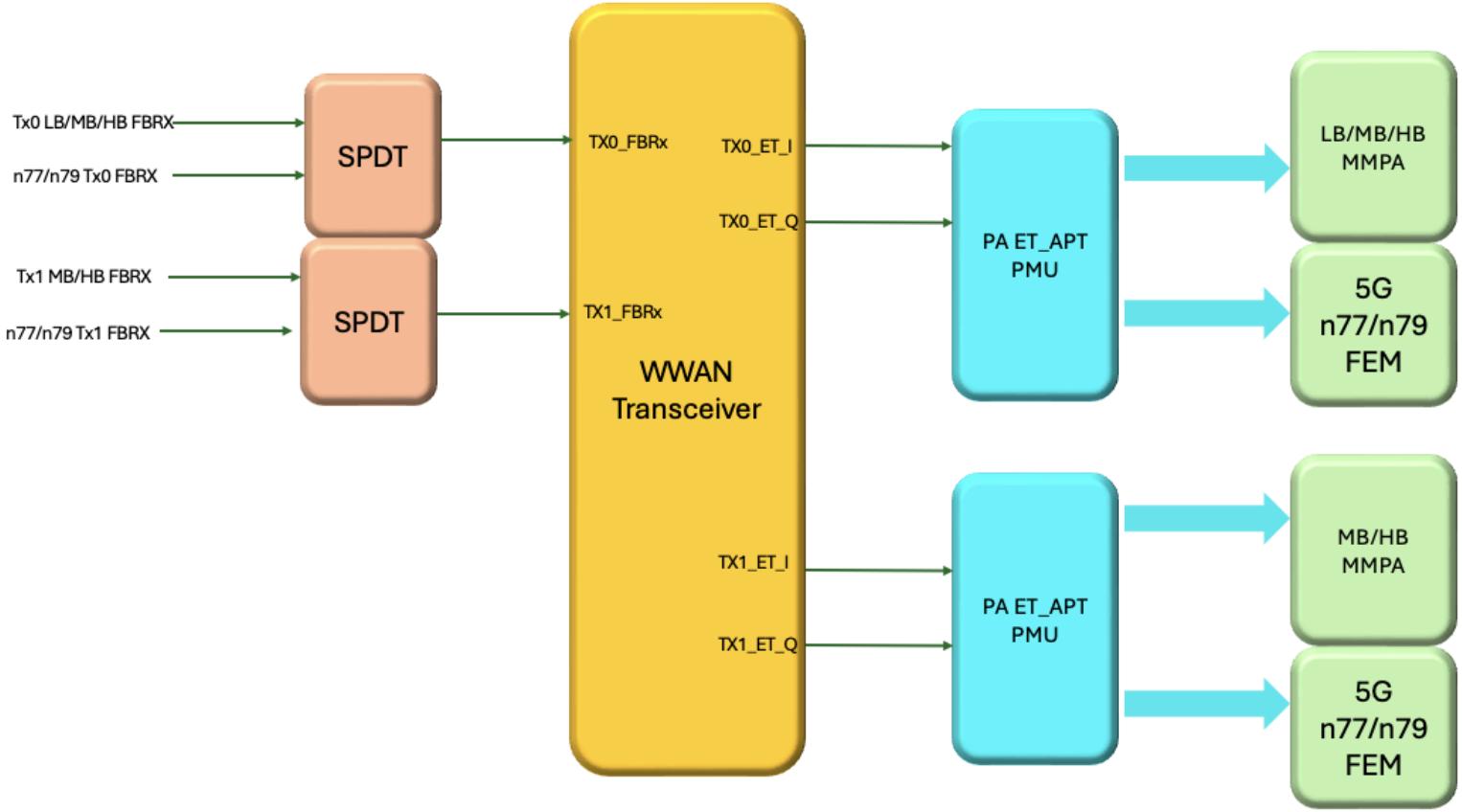

5G NR System Design Key Point

Duplexer

Tx Trace and Rx Trace should be routed cross and in diffetent layer at feed point to avoid Tx noise impact Rx

High isolation between Tx and Rx of duplexer

PA Power Source

PA Power source should be in a independ shielding cover and keep away from TRx circuit

ET Trace should be routed with soild GND and keep away from other RF trace due to it is a noisy trace

Antenna

The isolation between ANT 1 and Ant 5 should be over 25dB due to ENDC application

Isolation for each ANTs should be pver 20dB due to MIMO application

- Feature:
  --Support 802.11 a/b/g/n/ac/ax
  --Support 2.4GHz/5.5GHz/6.5GHz
  --Support 2x2 MIMO for Tx and Rx
  --Support 802.11ax DBS
  --Support Bluetooth 5.3
  --Support Bluetooth 2 antennas diversity

Block Diagram

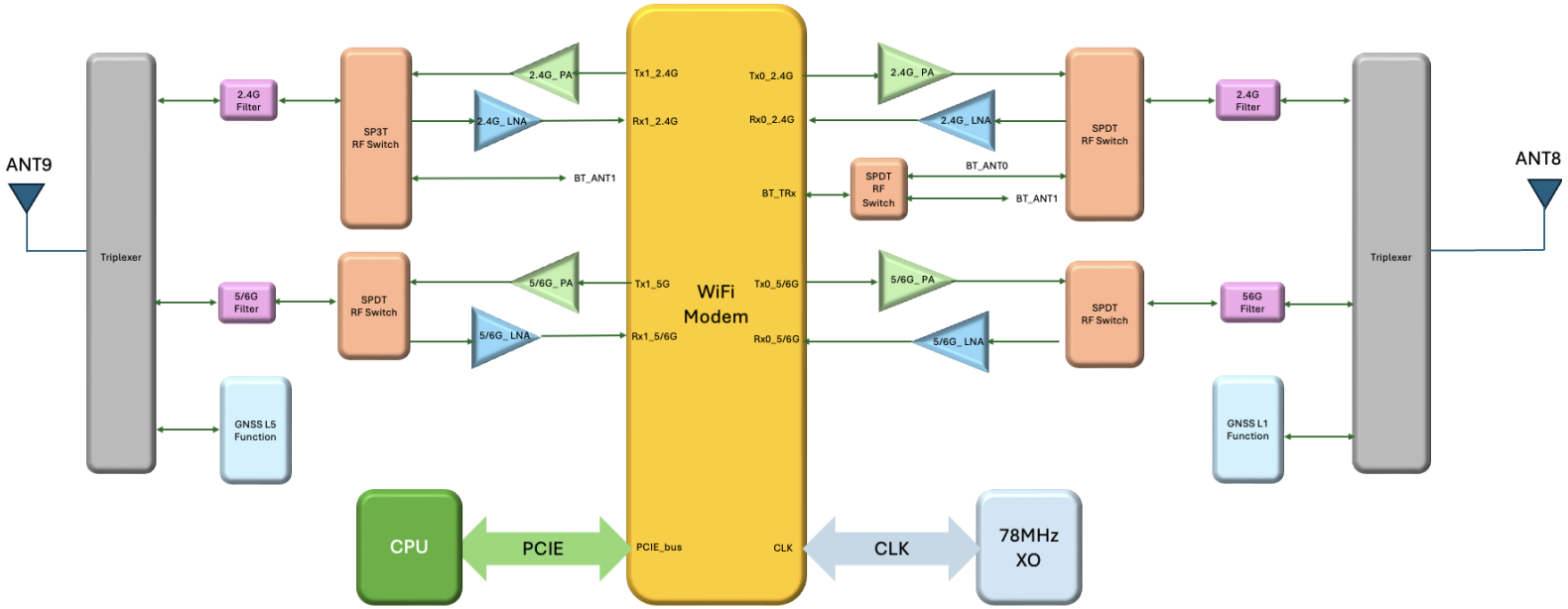

WiFi/Bluetooth System Design Key Point

Filter

Filter must use BAW filter due to co-existence design with 5G NR system for 2.4G and 5/6G

Power Amp

The PA of WiFi should be with 30dBm P1D due to PAPR impaction

DPD is used for 1024 QAM to improve EVM perfromance

Bluetooth use modem interal PA due to Tx power is class 2 (2dBm)

Antenna

The isolation between WiFi ANT and WWAN mid band low band ANT should be over 20dB on mobile phone for co-existence design with 5G NR

GNSS

- Feature:
  - --Support GNSS L1/L5
  - --Support C/N0=40dB under Receiver level=-130dBm
  - --Support Tracking Sensitivity =-160dBm under C/N0=10dB
  - --Support TTFF <3s
  - --Share ANTs with WiFi 6E
  - --Share Modem with 5G NR
  - --Support compatibility with 5G NR n13

Block Diagram

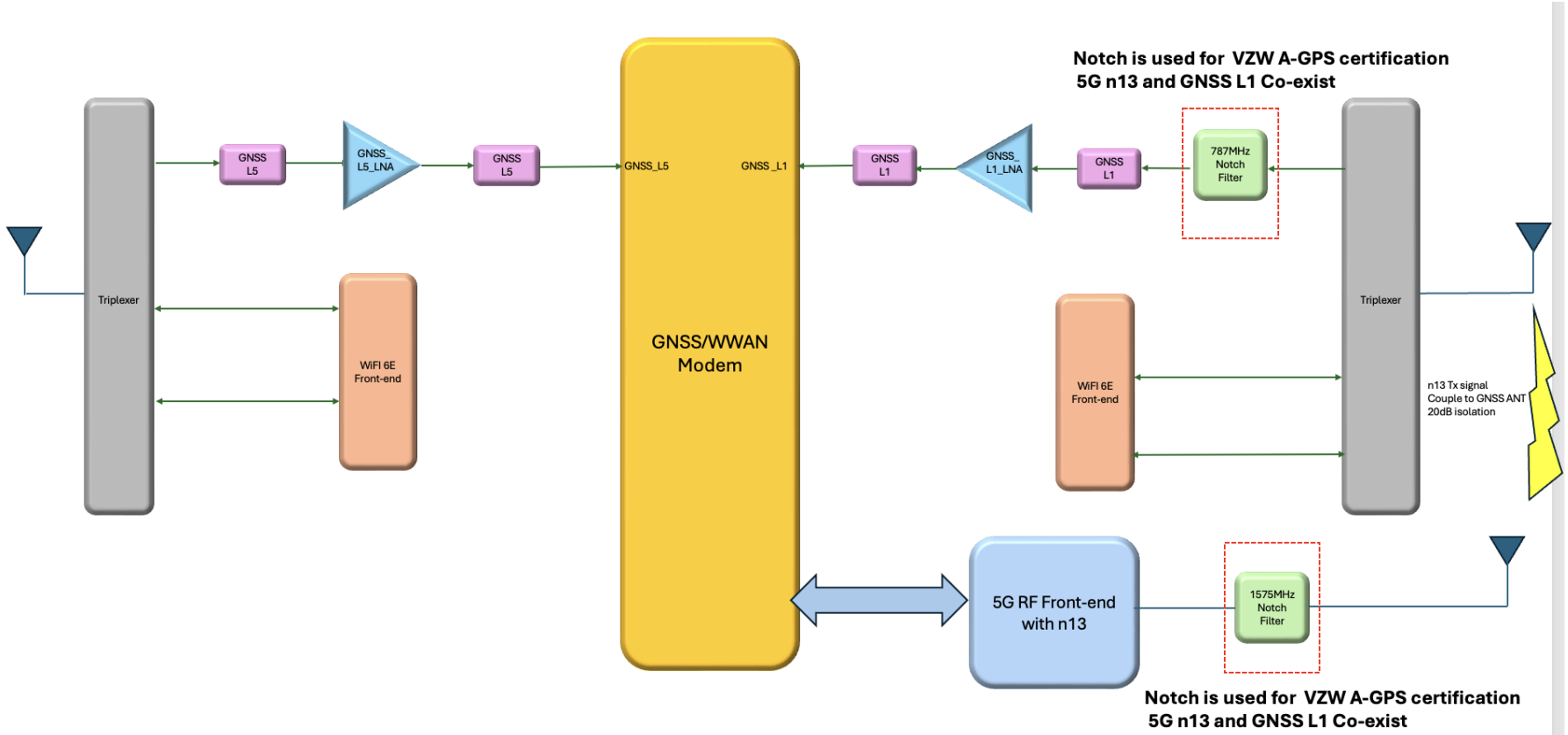

GNSS System Design Key Point

Filter

Pre- SAW Filter: Eliminate adjacent noise to prevent first LNA saturation—Mandatory

Post-SAW Filter: Reduce the noise the from first LNA –Option

787MHz Notch Filter: Eliminate 5G n13 couple noise from WWAN low band ANT—Mandatory for system with 5G n13

Add 1575MHz notch filter at 5G n13 PA out to eliminate 2nd harmonic of n13

First Stage LNA

LNA should close to ANT.

The Noise figure <2dB is better

The gain is not over 20dB to prevent the second LNA saturation.

Higher IIP2 will improve the GNSS desense performance with 5G n13

Antenna

The isolation between GNSS ANT and WWAN mid band low band ANT should be over 20dB on mobile phone , if the device want to get VZW certification, isolation should be over 25dB

NFC

- Feature:
  --Support ISO/IEC 14443A/B (EMVCo compliant)
  --Support FeliCa
  --Support MIFARE
  --Support ISO/IEC 15693 (vicinity card)
  --Support External Security Element (eSE)
  --Tunable RF power to reduce display/TPM interference
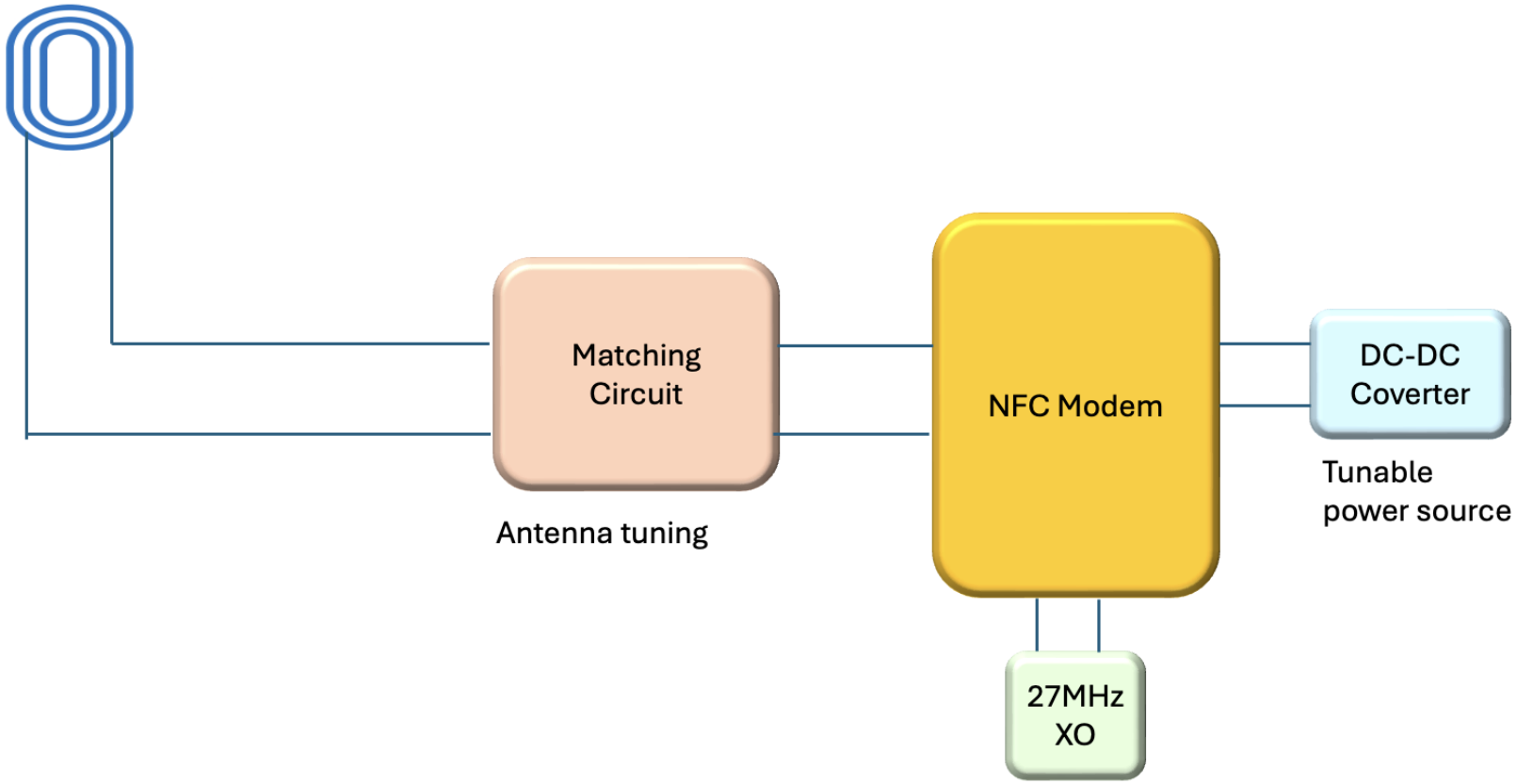
Block Diagram