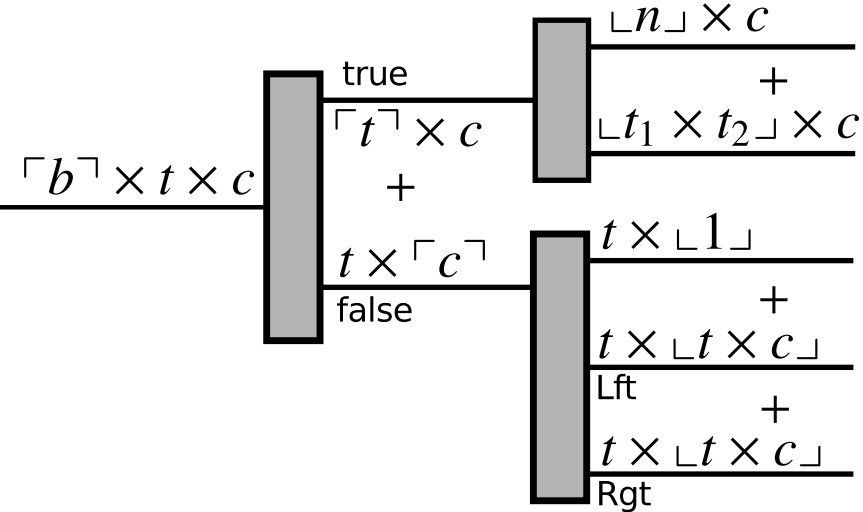
$\ulcorner b \urcorner \times t \times c$
true
$\ulcorner t \urcorner \times c$
+
$t \times \ulcorner c \urcorner$
false
$\llcorner n \lrcorner \times c$
+
$\llcorner t_1 \times t_2 \lrcorner \times c$
$t \times \llcorner 1 \lrcorner$
+
$t \times \llcorner t \times c \lrcorner$
Lft
+
$t \times \llcorner t \times c \lrcorner$
Rgt

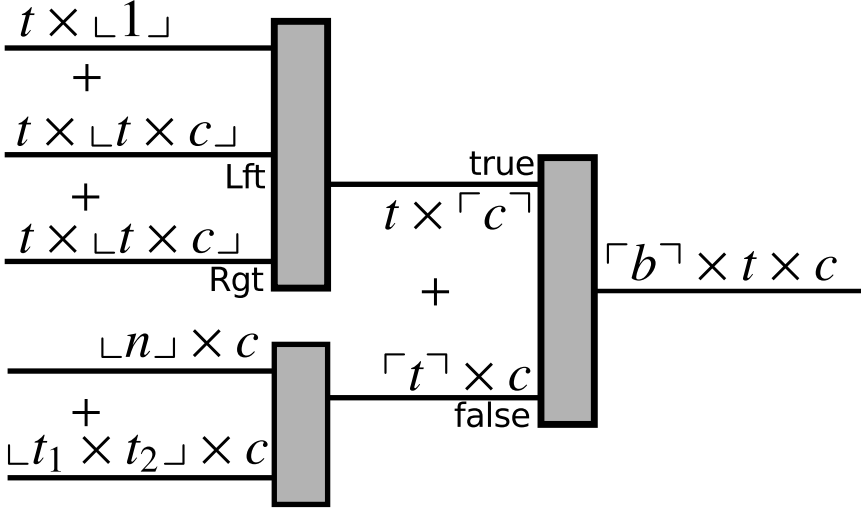
$t \times \llcorner 1 \lrcorner$
+
$t \times \llcorner t \times c \lrcorner$
Lft
+
$t \times \llcorner t \times c \lrcorner$
Rgt
true
$t \times \ulcorner c \urcorner$
+
$\ulcorner t \urcorner \times c$
false
$\llcorner n \lrcorner \times c$
+
$\llcorner t_1 \times t_2 \lrcorner \times c$
$\ulcorner b \urcorner \times t \times c$