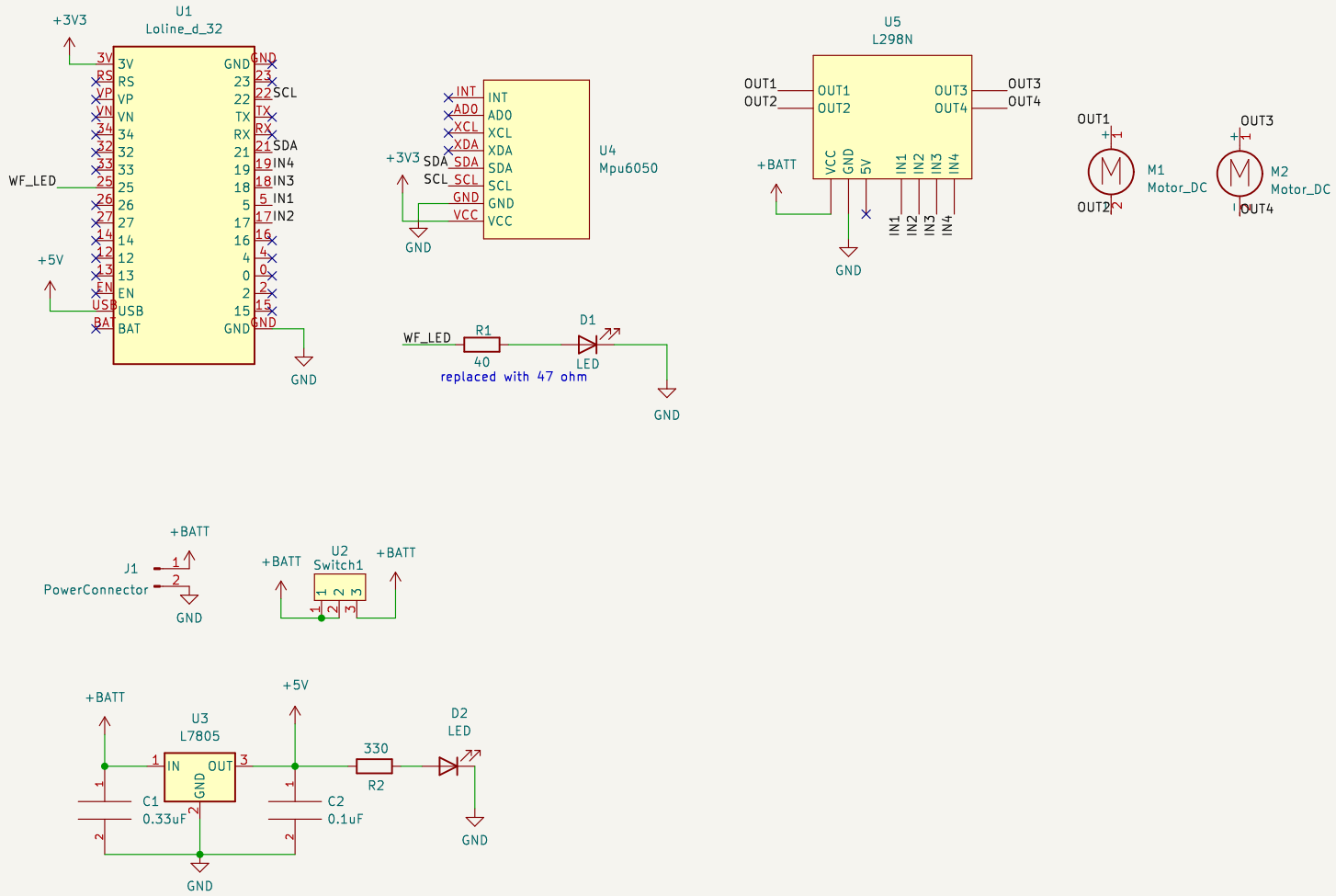

Drawn by Jaewon Ahn

MyongJi Univ

Sheet: /

File: Robot.kicad_sch

Title: Self Balancing Robot

Size: A4	Date: 2022-11-16	**Rev:**
KiCad E.D.A. eeschema (6.0.1)		Id: 1/1