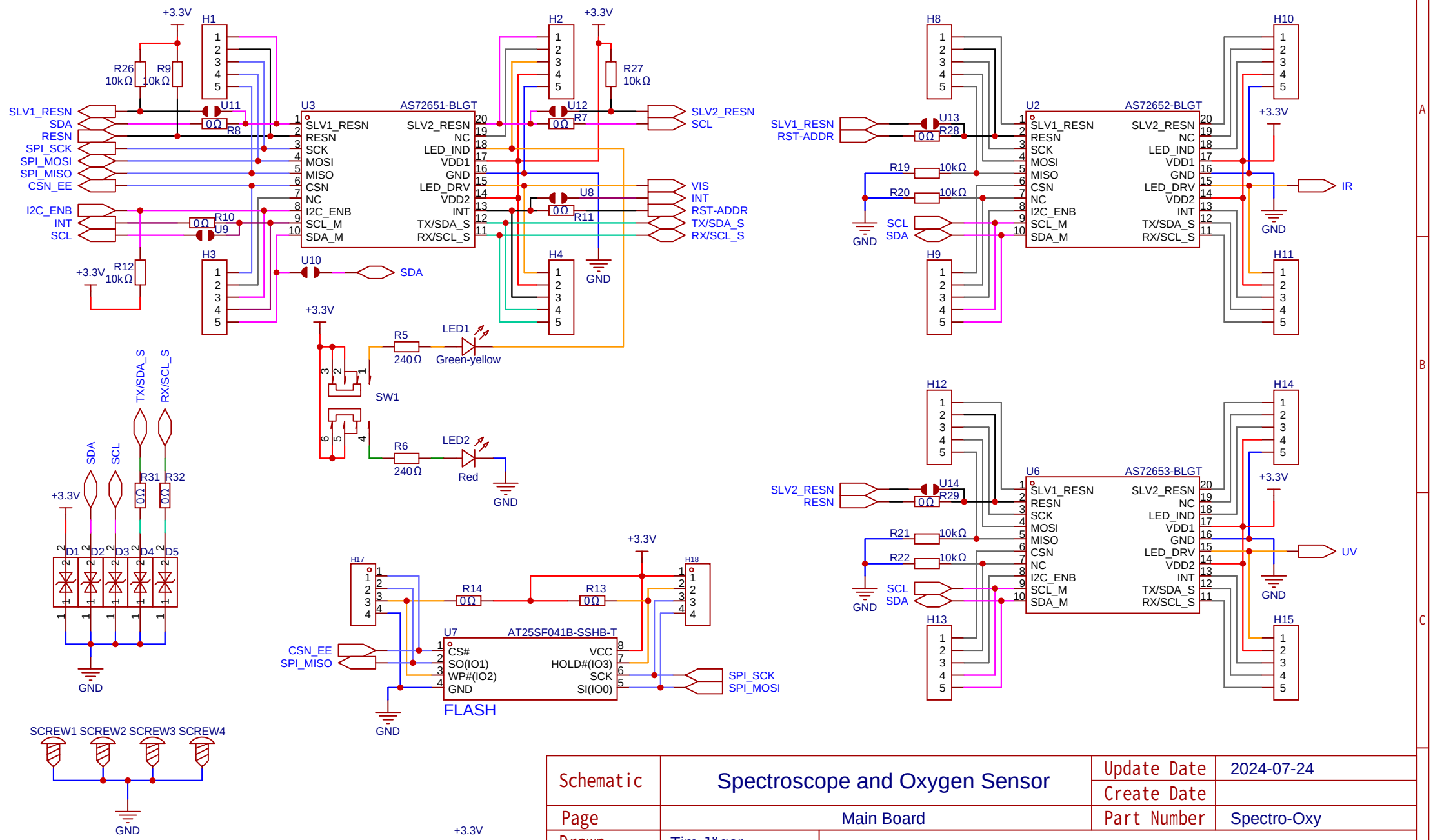

Schematic	Spectroscope and Oxygen Sensor	Update Date	2024-07-24
		Create Date	
Page	Main Board	Part Number	Spectro-Oxy
Drawn	Tim Jäger	Chlorophyll two boards	
Reviewed			
		VER	SIZE	PAGE 1 OF 5
Vrije Universiteit Brussel		V3.2	A4	VUB

FLASH Programmer Auto-Reset

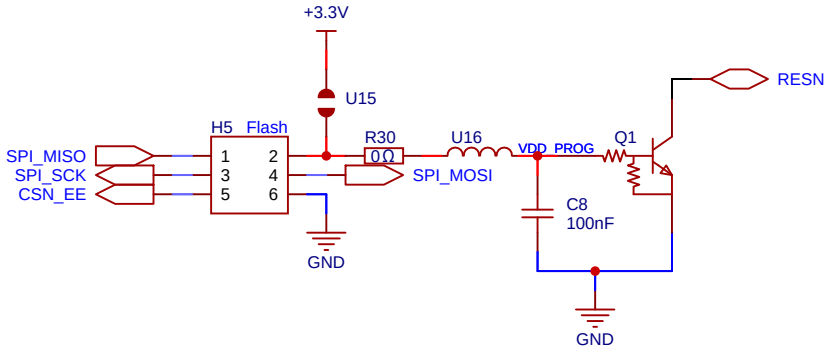

FLASH Programmer Manual-Reset

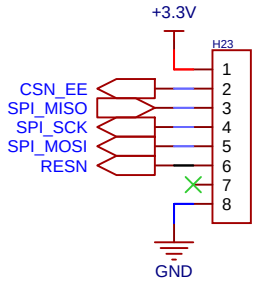

System Interface

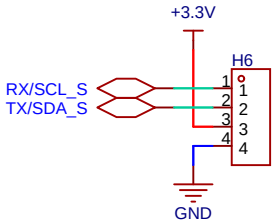

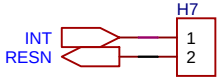

LED Interface

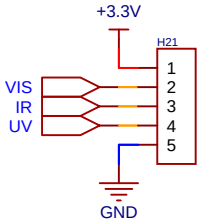

External Supply

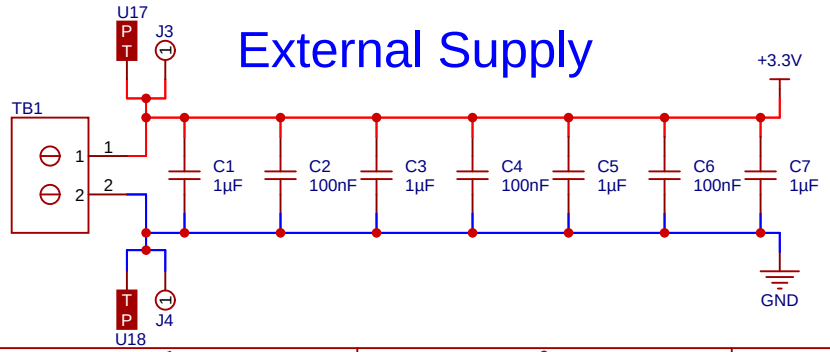

Schematic	Spectroscope and Oxygen Sensor	Update Date	2024-07-24
		Create Date	
Page	Main Board Connectors	Part Number	Spectro-Oxy
Drawn	Tim Jäger	Chlorophyll two boards	
Reviewed			
		VER	SIZE	PAGE 2 OF 5
Vrije Universiteit Brussel		V3.2	A4	VUB

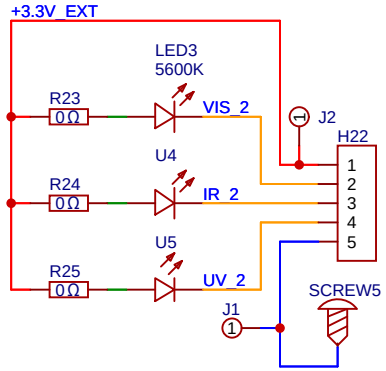

Schematic	Spectroscope and Oxygen Sensor	Update Date	2024-07-24
		Create Date	
Page	Lighting Board	Part Number	Spectro-Oxy
Drawn	Tim Jäger	Chlorophyll two boards	
Reviewed			
		VER	SIZE	PAGE 3 OF 5
Vrije Universiteit Brussel		V3.2	A4	VUB

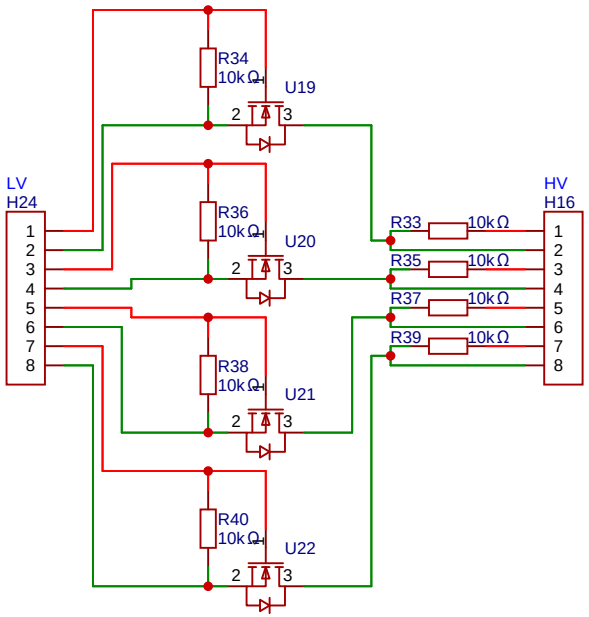

Schematic	Spectroscope and Oxygen Sensor	Update Date	2024-07-24
		Create Date	
Page	Level Shifter	Part Number	Spectro-Oxy
Drawn	Tim Jäger	Chlorophyll two boards	
Reviewed			
		VER	SIZE	PAGE 4 OF 5
Vrije Universiteit Brussel		V3.2	A4	VUB

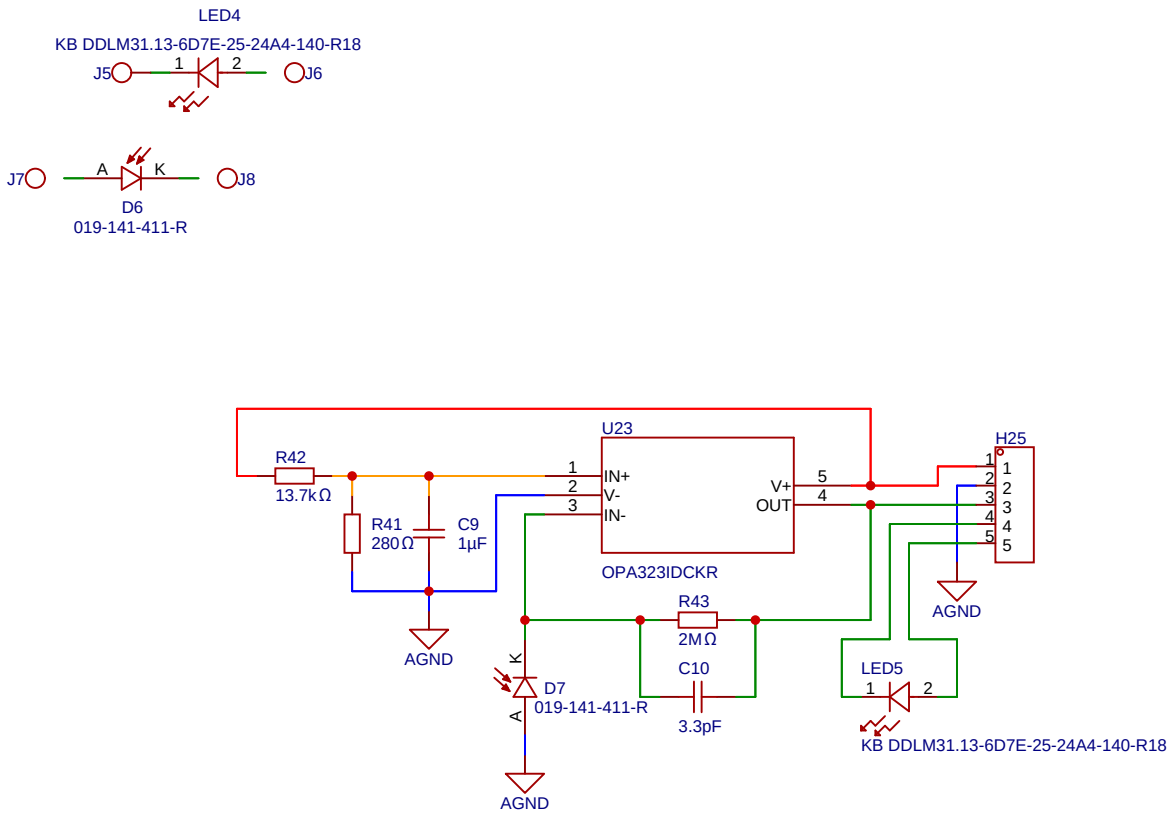

Schematic	Spectroscope and Oxygen Sensor	Update Date	2024-07-25
		Create Date	
Page	Oxygen Sensor	Part Number	Spectro-Oxy
Drawn	Tim Jäger	Chlorophyll two boards	
Reviewed			
		VER	SIZE	PAGE 5 OF 5
Vrije Universiteit Brussel		V3.2	A4	VUB