ELECTRICAL, AUDIO, RIDE COMMAND - Z26NMY99A4/B4/A6/B6 (C750831)

2026 RZR - RZR XP S 4 1000 ULTIMATE (R01) - Z26NMY99A4/B4/A6/B6

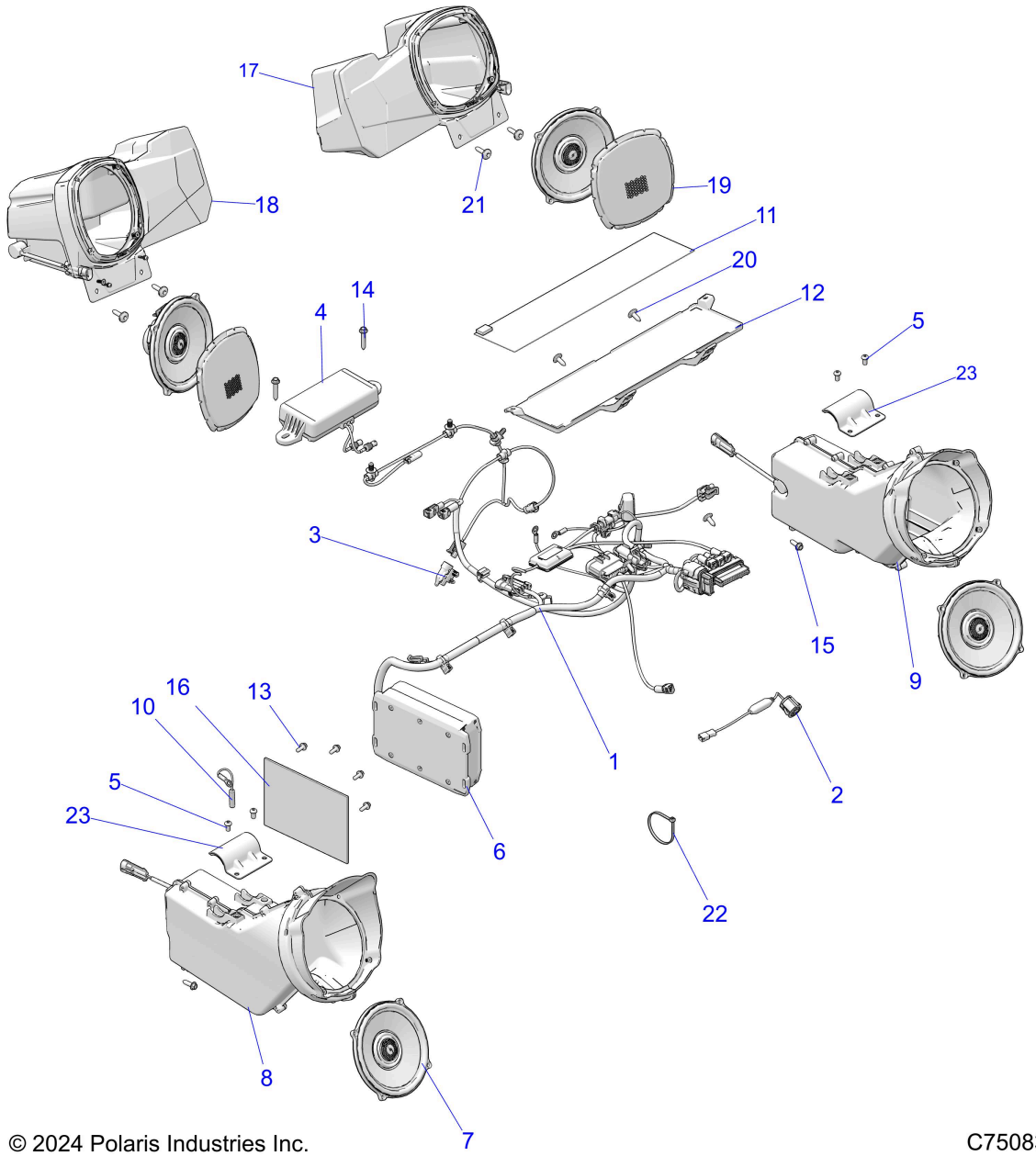

© 2024 Polaris Industries Inc. C750831

Reference #	*Part#*	*Description*	*Quantity*
1	2418311	HARN-RIDE COMMAND,CAPPED	1
2	4081064	CAM-IR ILLUMINATED,AMB SENSE	1
3	4018205	SENSOR-GAUGE,AIR TEMP,PNL MNT	1
4	4083353	ANTENNA,GPS,V2V,XP1K	1
5	7519063	SCREW-TXBH-M6X1.0X12 8.8 ZPB D20	4
6	2414533	ASM-AMP,4 CHANNEL [ORDER REF #16 5815485 WITH 2414533]	1
7	2414537	ASM-COAXIAL	4
8	2415281	ASM-ENCL,SPKR,FRT,LH [INCL. 7]	1
9	2415282	ASM-ENCL,SPKR,FRT,RH [INCL. 7]	1
10	4018709	JUMPER,AMP GROUND	1

11	4019301	ANTENNA,AM-FM	1
12	5458790	BRKT-MOUNT,ANTENNA	1
13	7516603	SCR-HXFL-M5X0.8X14 18-8	4
14	7519330	SCREW-NXFL-M6X35 ZOD HILO	2
15	7520055	SCR-HXFL-M6X20 ZOD HI LO	2
16	5815485	SEAL-SILICONE,AMP	1
17	2415283	ASM-ENCL,SPKR,RR,LH [INCL. 7,18]	1
18	2415284	ASM-ENCL,SPKR,RR,RH [INCL. 7,18]	1
19	2415659	ASM-GRILL,RR SPEAKER	2
20	7518936	SCR-M6X1X16 TR/TX-M	3
21	7519650	SCR-TXTH-M6X1.0X25 ZFB	4
22	7080138	CABLE-TIE,DIA12-50MM,WTHR-RES.	1
23	5268935	BRKT-CLAMP,TUBE,SPKR	2

Copyright 1996-2026 Polaris Industries U.S.A All rights reserved.