ENGINE, IGNITION COIL AND SPARKPLUGS - Z26NMY99A4/B4/A6/B6 (C702912)

2026 RZR - RZR XP S 4 1000 ULTIMATE (R01) - Z26NMY99A4/B4/A6/B6

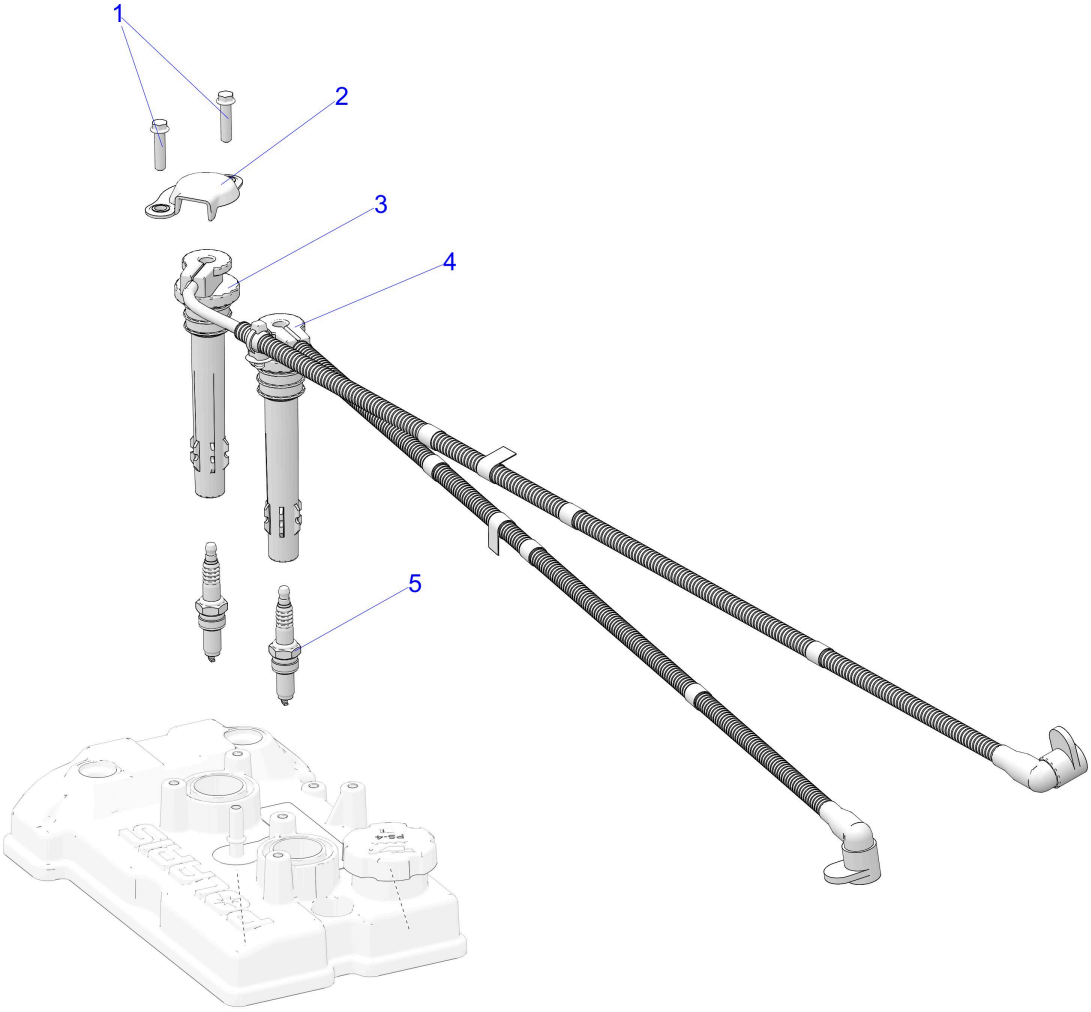

© 2021 Polaris Industries Inc.

C702912

Reference #	Part#	Description	Quantity
1	7519297	SCREW-HXFLG,M6X1.0X25,10.9	2
2	5459396	CVR-SPARK PLUG WIRE,2 BOLT	1
3	4081405	WIRE-SPARKPLUG,MAG	1
4	4080762	WIRE-SPARKPLUG,PTO	1
5	3022662	SPARK PLUG-10 MM	2

Copyright 1996-2026 Polaris Industries U.S.A All rights reserved.