ENGINE, OIL SUMP COVER - Z26NMY99A4/B4/A6/B6 (C702905)

2026 RZR - RZR XP S 4 1000 ULTIMATE (R01) - Z26NMY99A4/B4/A6/B6

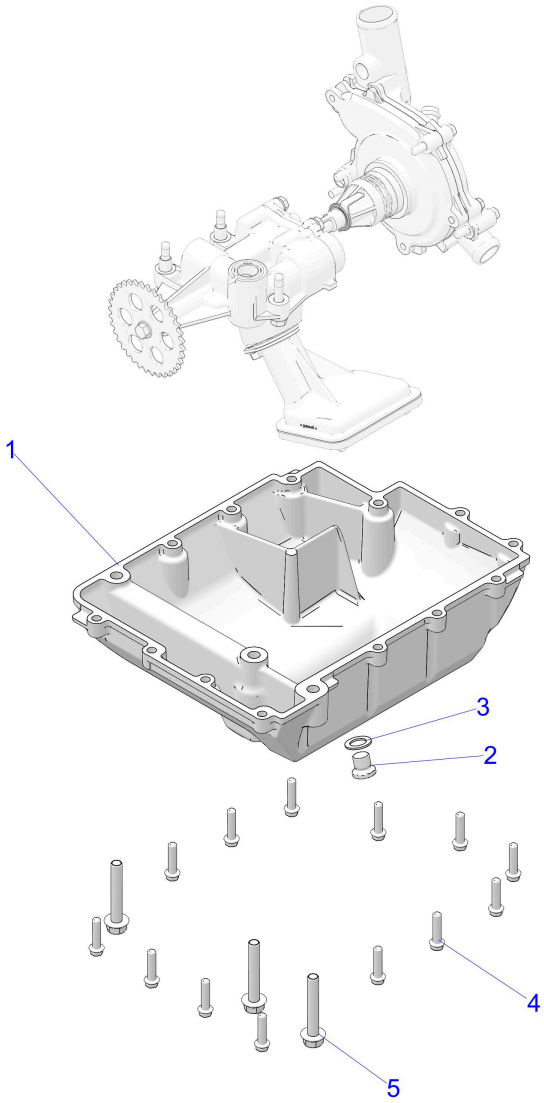

© 2021 Polaris Industries Inc.

C702905

Reference #	Part#	Description	Quantity
1	5143719	COVER-SUMP,MACH	1
2	7052306	PLUG-SOCKET,M12X1.5 DIN 908A	1
3	5812232	WASHER-19X12X1.3,COPPER	1
4	7519297	SCREW-HXFLG,M6X1.0X25,10.9	13
5	7517793	SCR-M8X1.25X50 HX/FL-Y	3

Copyright 1996-2026 Polaris Industries U.S.A All rights reserved.