REFERENCE, OWNERS MANUAL AND TOOL KIT - Z26NMY99A4/B4/A6/B6 (C750585)

2026 RZR - RZR XP S 4 1000 ULTIMATE (R01) - Z26NMY99A4/B4/A6/B6

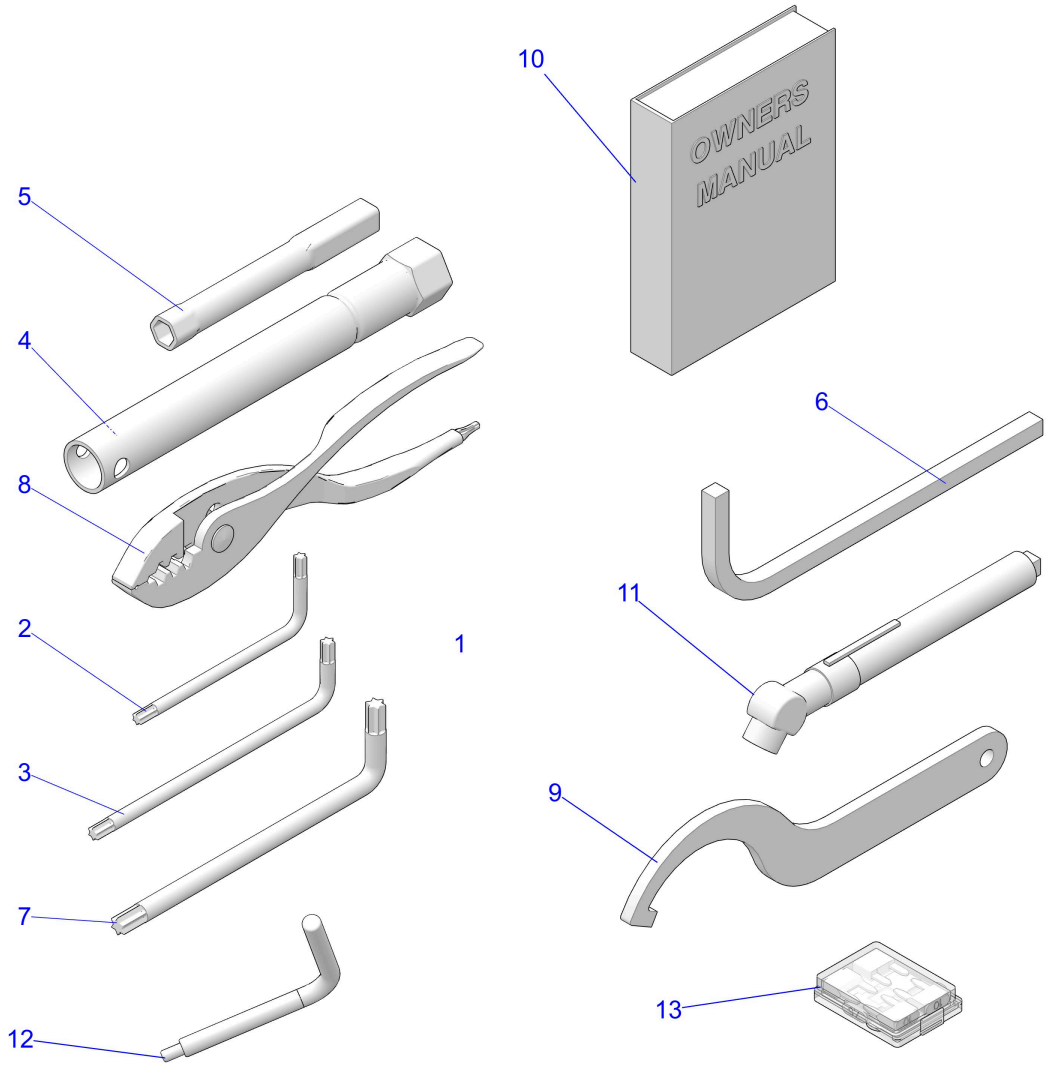

© 2024 Polaris Industries Inc.

C750585

Reference #	Part#	Description	Quantity
	9939960	QSG TAG ORV [NOT SHOWN]	1
1	2881524	K-ACCY TOOL,RANGER [INCL. 2-8]	1
2	2875341	WRENCH-TORX,T-25	1
3	2874858	WRENCH-TORX,T-27	1
4	2880975	SOCKET-SPARK PLUG	1
5	2881189	DRIVER, NUT, 8MM	1
6	2881190	HANDLE, LONG-NUT DRIVER, 8MM	1
7	2879339	WRENCH-TORX,T-40	1
8	2876389	PLIERS-COMBO, #2 ASSEMBLY	1
9	2885157-329	WRENCH, SPAN/SPREADER, BLACK	1

10	9939929	MAN-OWN,RIDE COM 7" DSPLY ORV	1
10	9942079	MAN-OWN MY26 RZR XP S	1
11	2878518	GAUGE, TIRE PRESSURE, 30 PSI	1
12	2883577	TOOL-BELT REMOVAL	1
13	5456333	CASE-SPARE FUSE,GEN	1
13	2889697	K-SPARE FUSE,RZR [INCL. FUSES]	1

Copyright 1996-2026 Polaris Industries U.S.A All rights reserved.