SUSPENSION, REAR SHOCK MOUNTING - Z26NMY99A4/B4/A6/B6 (C750913)

2026 RZR - RZR XP S 4 1000 ULTIMATE (R01) - Z26NMY99A4/B4/A6/B6

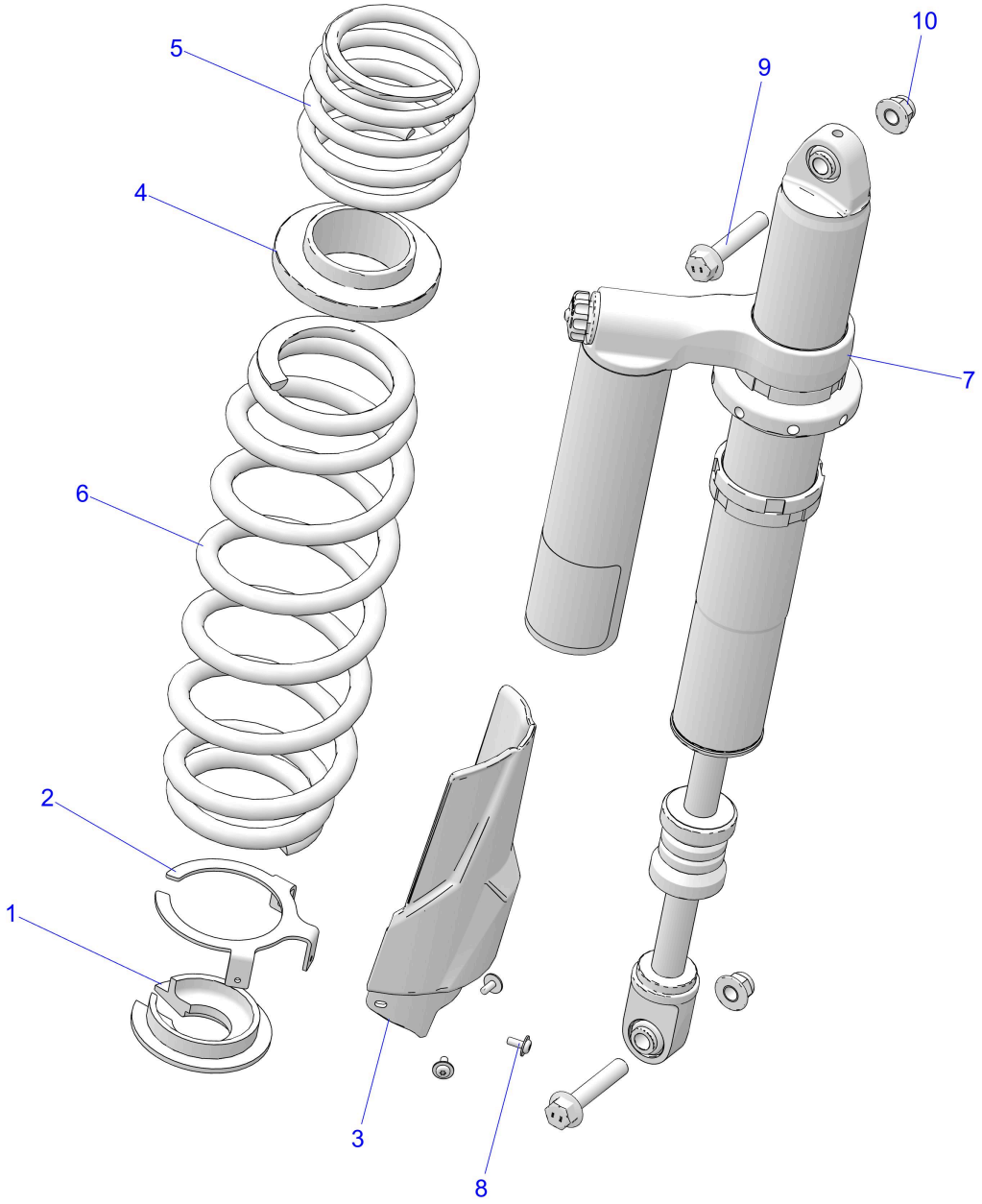

© 2025 Polaris Industries Inc.

C750913

Reference #	*Part#*	*Description*	*Quantity*
1	1501211	RETAINER-SPRING,2.5"	2
2	5258172	MOUNT, SHOCK GUARD	2
3	5438873-070	GUARD, SHOCK ROD, REAR, BLACK	2
4	5458640	SPACER-SPRING,2.5"	4
5	7046381-831	SPR-300 8.50FL 3.04-3.04ID,BRZ	1
6	7046378-831	SPR-225 16.00 FL3.04-3.04ID,BZ	1
7	7046373	SHOCK-REAR,LH	1
7	7046374	SHOCK-REAR,RH	1
8	7512084	SCR-10-24X1/2, PHTXTRIRD, SEMS-Y	6
9	7521334-65	SCR-HXFL-M12X1.75X65 10.9 ZFB	2

10	7548030	NUT-HXFL-M12X1.75 8 ZTB NYL	2

Copyright 1996-2026 Polaris Industries U.S.A All rights reserved.