BODY, DOORS, REAR - Z26NMY99A4/B4/A6/B6 (C0704091-5)

2026 RZR - RZR XP S 4 1000 ULTIMATE (R01) - Z26NMY99A4/B4/A6/B6

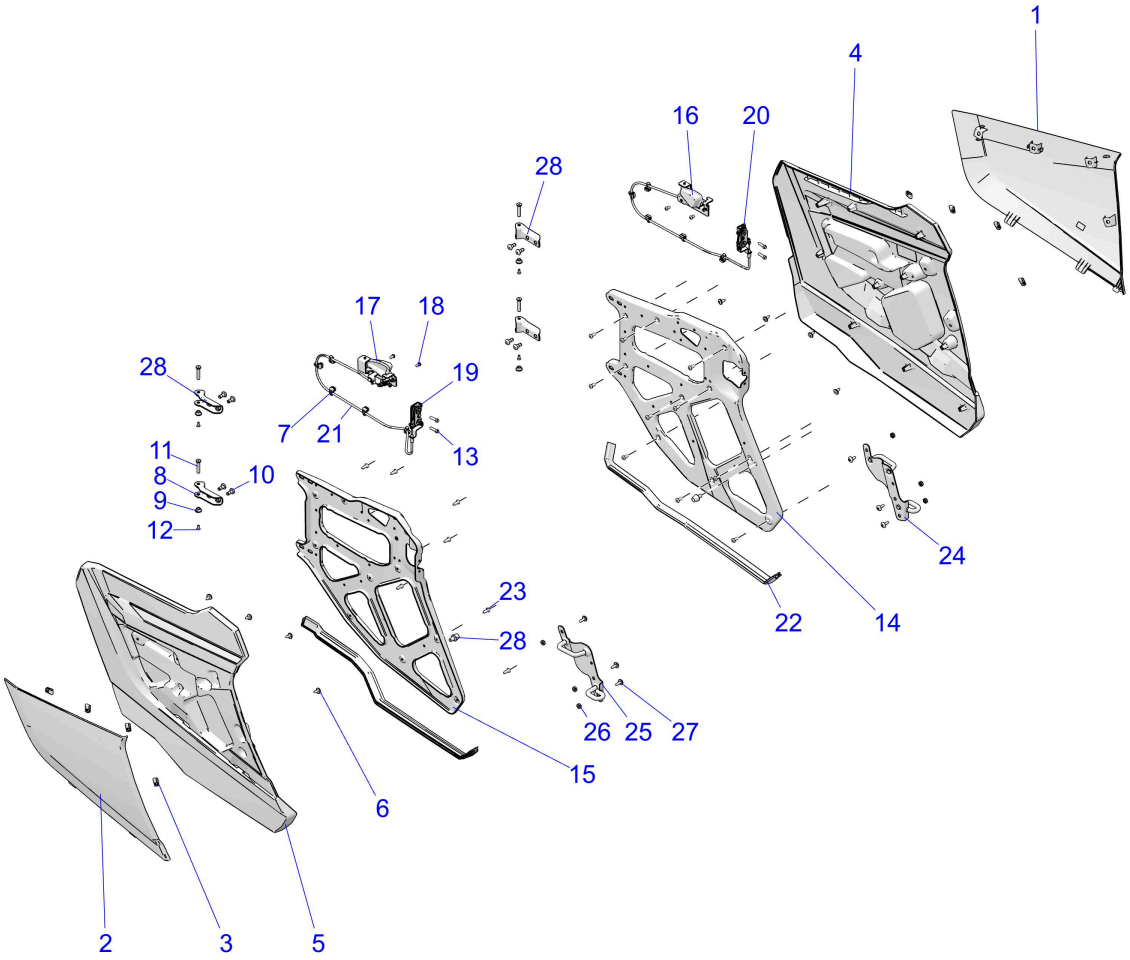

© 2024 Polaris Industries Inc. C0704091-5

Reference #	*Part#*	*Description*	*Quantity*
1	5465028-804	DOOR-SKIN,REAR,LH,MIC,STLTH GR [A4/B4][STEALTH GRAY NON-METALLIC]	1
1	5465028-902	DOOR-SKIN,REAR,LH,MIC,SD DN [A6/B6][SAND DUNE NON-METALLIC]	1
2	5465029-804	DOOR-SKIN,REAR,RH,MIC,STLTH GR [A4/B4][STEALTH GRAY NON-METALLIC]	1
2	5465029-902	DOOR-SKIN,REAR,RH,MIC,SD DN [A6/B6][SAND DUNE NON-METALLIC]	1
3	7547674	NUT-M6-1.0, U-TYPE (2.5-3.8)	AR
4	5465030-070	PANEL-DOOR,REAR,LH,BLK	1
5	5465031-070	PANEL-DOOR,REAR,RH,BLK	1
6	7518936	SCR-M6X1X16 TR/TX-M	8
7	7082403	CLIP-EDGE, 1-3mm THICKNESS	10
8	5417634	BUMPER-DOOR,REAR	2

9	5450592	BUSHING, DOOR, PIVOT	8
10	7519997	SCR-TXTH-M8X1.25X20 8.8 ZB3 P3	8
11	7527956	SCR-TXWH-M5X0.8X40 10.9 ZTB SP	4
12	7517255	SCREW-FLHD-M5X0.8X12 10.9 P&O	4
13	7519297	SCREW-HXFLG,M6X1.0X25,10.9	4
14	5272988-458	STAMPING-DOOR FRAME,MP,LH,BLK	1
15	5272989-458	STAMPING-DOOR FRAME,MP,RH,BLK	1
16	2639143	ASM-ACTUATOR DOOR,LH	1
17	2639144	ASM-ACTUATOR DOOR,RH	1
18	7519063	SCREW-TXBH-M6X1.0X12 8.8 ZPB D20	4
19	7082760	ASM-LATCH,RTRY,2 STG,RH	1
20	7082759	ASM-LATCH,RTRY,2 STG,LH	1
21	7082935	CABLE-DOOR,REAR	2
22	5522386-1020	SEAL-WHTRSTRP,1020MM	2
23	7519045	SCR-TX TRUSS-#14X3/4, HI/LO ZBK	20
24	1027692-458	WELD-REAR STRIKER BRKT,LH,BLK	1
25	1027693-458	WELD-REAR STRIKER BRKT,RH,BLK	1
26	7547307	NUT-WELD,M6X1,PROJECTION	6
27	7519112	SCREW-TXTH-M6X1.0X20 T40 ZPB	6
28	1026372	WELD-DOOR HINGE,REAR	4

Copyright 1996-2026 Polaris Industries U.S.A All rights reserved.