BODY, GRAB BAR, PASSENGER - Z26NMY99A4/B4/A6/B6 (C0704079-2)

2026 RZR - RZR XP S 4 1000 ULTIMATE (R01) - Z26NMY99A4/B4/A6/B6

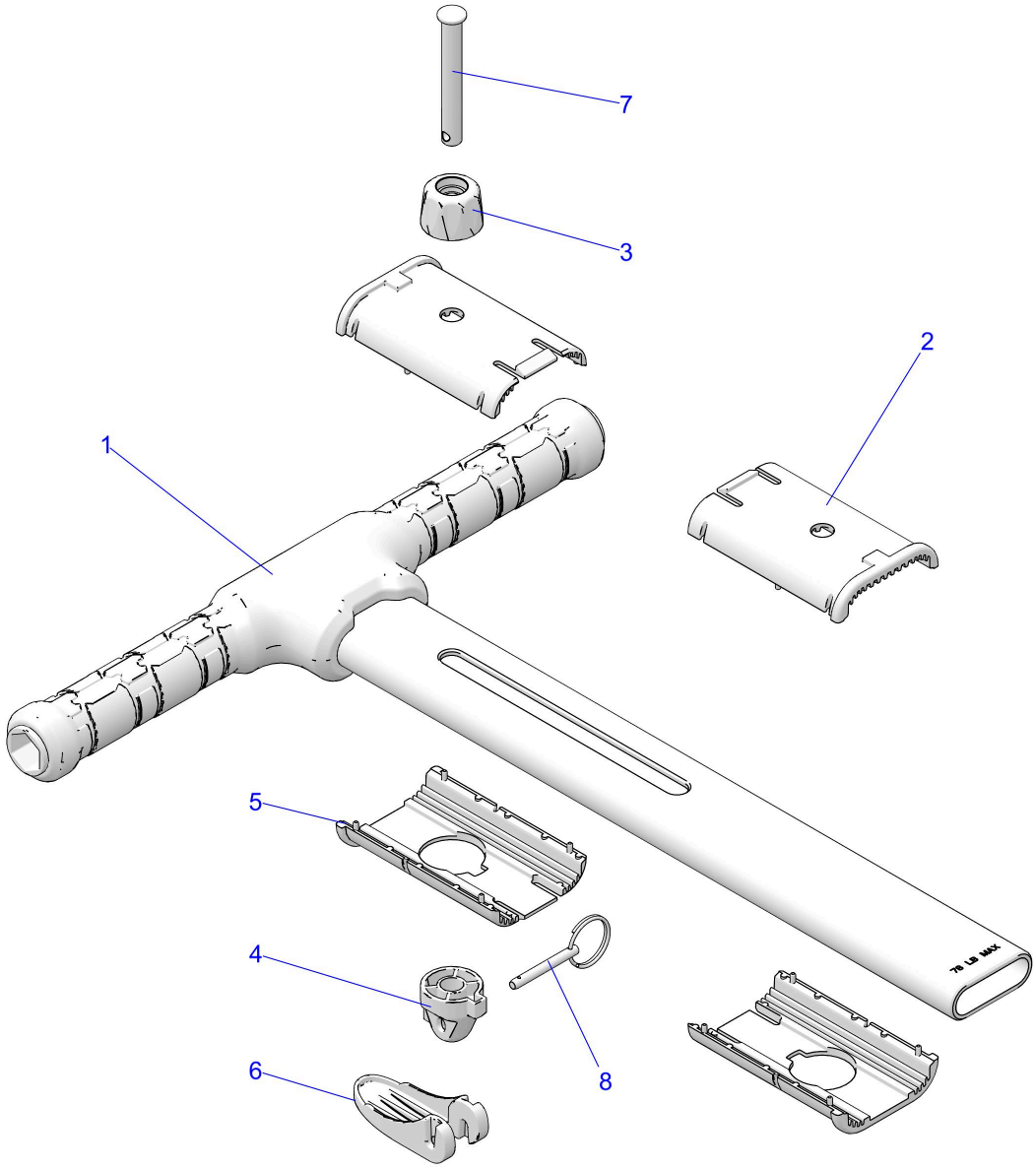

© 2021 Polaris Industries Inc. C0704079-2

Reference #	*Part#*	*Description*	*Quantity*
1	2637771	ASM-GRAB BAR	1
2	5457427	BUSHING-GRAB BAR,UPPER	2
3	5457511	NUT-GRAB BAR	1
4	5457512	CAP,GRAB BAR LEVER	1
5	5457891	BUSHING-GRAB BAR,LOWER	2
6	5459039	LEVER,GRAB BAR	1
7	7521309	ROD-GRAB BAR THREADED	1
8	7663047	PIN-GRAB BAR	1

Copyright 1996-2026 Polaris Industries U.S.A All rights reserved.