STEERING, GEAR BOX - Z26NMY99A4/B4/A6/B6 (C703085)

2026 RZR - RZR XP S 4 1000 ULTIMATE (R01) - Z26NMY99A4/B4/A6/B6

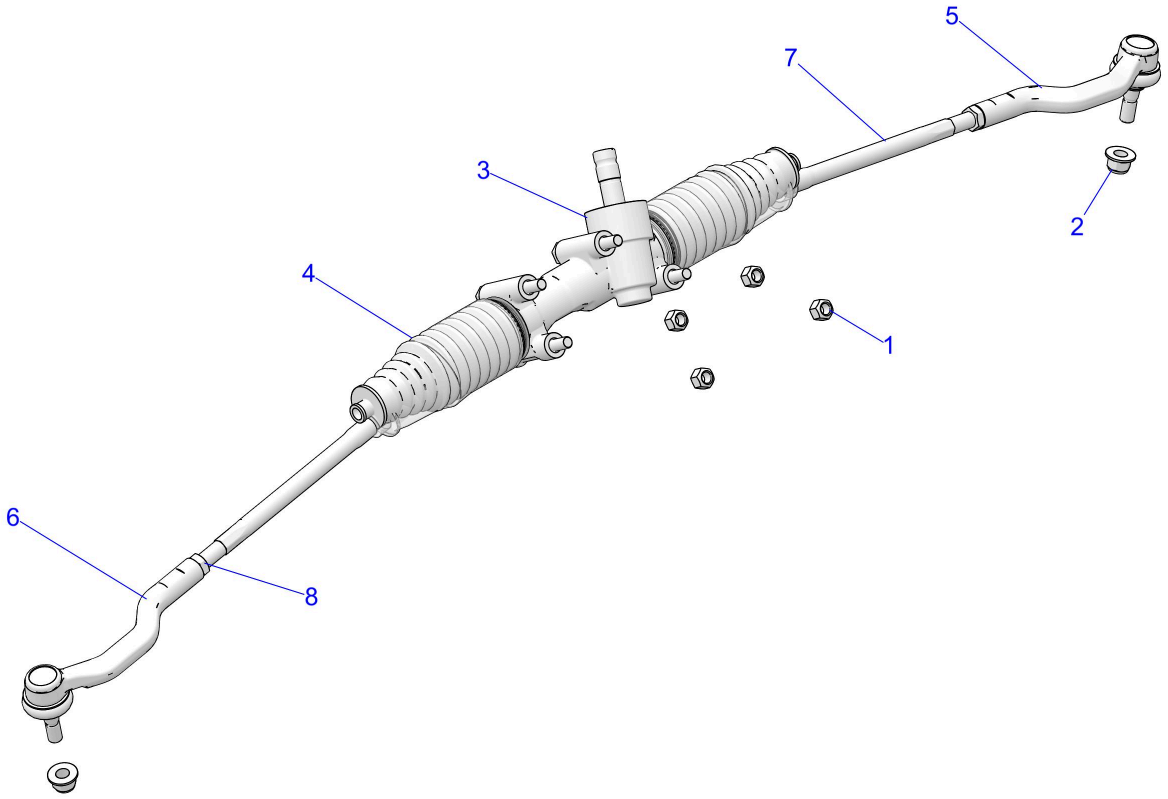

© 2021 Polaris Industries Inc. C703085

Reference #	*Part#*	*Description*	*Quantity*
1	7548155	NUT-HEX-M10X1.25X 8 ZTB NYL	4
2	7547334	NUT-M12X1.5, FLG, NYLOC-OLIVE D	2
3	1824952	ASM-GEAR BOX,STEERING,1.5T [INCL. 4-8]	1
4	5417106	BELLOWS KIT	2
5	7061228	ROD-END,TAPERED,PROFILED,LH	1
6	7061229	ROD-END,TAPERED,PROFILED,RH	1
7	-------	INNER TIE ROD	2
8	2207059	K, LOCK NUT	1

Copyright 1996-2026 Polaris Industries U.S.A All rights reserved.